Ohio Environmental Protection Agency

Mike Dewine, Governor
Jon Husted, Lt. Governor
Laurie A. Stevenson, Director

April 1, 2021

A-Gas, Inc., dba A-Gas Americas
c/o Mike Armstrong, President
1100 Haskins Road
Bowling Green, OH 43402

Re: A-Gas, US Inc.
Director's Final Findings and Orders (DFFO)
DFFO
RCRA C - Hazardous Waste
Wood County
OHD043643360

Subject: Final Findings and Orders of the Director

Dear Sir:

Transmitted herewith are the Final Findings and Orders of the Director concerning the matter indicated for A-Gas, US Inc.

If you have any questions, please contact Sarah Miles at (614) 644-3037.

Sincerely,

Tonya Andrews, Administrative Professional 3
Division of Environmental Response & Revitalization

Enclosure

cc: Mitch Mathews, DERR, CO
Colleen Weaver, DERR, NWDO
Sarah Miles, Legal
Mike Armstrong, A-Gas, Inc.
Bruce Ernst, A-Gas, Inc.

Ohio EPA 3/31/2021
Entered Directors Journal

3/31/2021

BEFORE THE
OHIO ENVIRONMENTAL PROTECTION AGENCY

In the Matter of:

A-Gas US, Inc., dba A-Gas Americas
1100 Haskin Road
Bowling Green, Ohio 43402

Respondent

Director's Final Findings and Orders

PREAMBLE

It is agreed by the parties hereto as follows:

I. JURISDICTION

These Director's Final Findings and Orders (Orders) are issued to A-Gas US, Inc., dba A-Gas Americas (Respondent) pursuant to the authority vested in the Director of the Ohio Environmental Protection Agency (Ohio EPA) under Ohio Revised Code (ORC) §§ 3734.02(G), 3734.14, 3745.01 and Ohio Administrative Code (OAC) rule 3745-50-31 .

II. PARTIES BOUND

These Orders shall apply to and be binding upon Respondent and successors in interest liable under Ohio law. No change in ownership of Respondent or of the Facility or Transfer Facility shall in any way alter Respondent's obligations under these Orders.

III. DEFINITIONS

Unless otherwise stated, all terms used in these Orders shall have the same meaning as defined in ORC Chapter 3734. and the rules promulgated thereunder.

IV. FINDINGS

The Director of Ohio EPA has determined the following findings:

1. Pursuant to ORC § 3734.02(G) and OAC rule 3745-50-31, the Director, by order, may exempt any person generating, storing, treating, disposing of, or transporting hazardous waste in such quantities or under such circumstances that, in the

determination of the Director, are unlikely to adversely affect the public health or safety or the environment from any requirement to obtain a permit or comply with other requirements of ORC Chapter 3734. Such an exemption shall be consistent with and equivalent to rules promulgated under the Resource Conservation and Recovery Act of 1976, 90 Stat. 2806, 42 U.S.C § 6921 et seq., as amended.

2. ORC § 3734.02(E)(2) requires all persons engaged in the storage, treatment, or disposal of any hazardous waste to have a hazardous waste installation and operation permit issued in accordance with ORC § 3734.05, except at a facility that is not subject to permit requirements under rules adopted by the Director pursuant to ORC § 3734.02(E)(3)(b).

3. Respondent owns and operates two Argon Plasma Arc refrigerant destruction units located at 1100 Haskins Road, Bowling Green, Ohio 43402 (Facility). Reclaimed refrigerants, primarily chlorofluorocarbons (CFCs), are rapidly heated to 3000*C where pyrolysis (thermo-chemical decomposition of organic material at elevated temperatures in the absence of oxygen) occurs. The process is followed by rapid alkaline quenching that prevents the formation of dioxins and furans. Neutralization of acids byproducts is accomplished with alkaline liquor resulting in halide salt solutions consisting of sodium chloride and sodium fluoride which are discharged to the local wastewater treatment facility while byproduct gases, typically argon, carbon dioxide and traces of carbon monoxide are vented to the atmosphere.

4. Halocarbons are a class of chemicals which include CFCs that are commonly used in refrigeration systems, fire extinguishers, and foam blowing. While halocarbons are safe and chemically inert from a human health perspective, manufacturing of "virgin" halocarbons has been phased out because these chemicals deplete the stratospheric ozone layer. Some types of older halocarbon refrigerants were originally made from materials regulated under subpart C of the federal Resource Conservation and Recovery Act (RCRA) and may contain trace manufacturing residuals that would be RCRA-regulated if chemically separated from the refrigerant. Specifically, older refrigerant, such as R-11, can exhibit a characteristic of hazardous waste for carbon tetrachloride and chloroform, (D019 and D022), as described in OAC rule 3745-51-24 (CFCs).

5. All CFCs received by Respondent are reclaimed through a distillation process regardless of end use.

6. Respondent is an U.S. EPA-certified refrigerant recycler and reclaims used refrigerants from various commercial, industrial and automotive sources. There are three end uses that Respondent may apply to reclaimed CFC refrigerants, 1) process the material for purposes of re-selling into the reclaimed refrigerant

market; 2) destroying the material for a fee in its plasma arc units; or 3) destroying the material in the plasma arc units for purposes of creating carbon credits.

7. OAC rule 3745-51-04(B)(12), excludes CFC refrigerants from being a hazardous waste provided the CFC refrigerants are reclaimed for further use. CFCs received, reclaimed and reused as refrigerant are excluded from being a waste and therefore not subject to these Orders.

8. Respondent stores CFCs in a DOT-approved cylinder or ISO containers. All incoming cylinders are stored in a bonded warehouse and entered into the inventory system.

9. On March 19, 2018, Respondent submitted an application (2018 Application) to Ohio EPA pursuant to ORC § 3734.02(G) and OAC rule 3745-50-31 for an exemption from ORC § 3734.02(E). The 2018 Application is attached and incorporated herein. The 2018 Application included information justifying the request and documentation that the storage and treatment (destruction) of hazardous waste halocarbon refrigerants (CFCs) which exhibit a characteristic of a hazardous waste for carbon tetrachloride and chloroform undertaken at the Facility without a hazardous waste installation and operation permit is unlikely to adversely affect public health or safety or the environment.

10. On April 4, 2018, Stephen Cook, Deputy Assistant Administrator, Office of Land and Emergency Management, United States Environmental Protection Agency (U.S. EPA), encouraged Respondent to work with Ohio EPA to find a pathway to allow Respondent to undertake the environmentally beneficial destruction of CFCs while U.S. EPA examined regulatory reform to clarify the regulatory status of destruction of CFCs.

11. At the time destruction technology of CFCs was at its infancy save for commercial incineration. EPA stated that it would come back and evaluate the exclusion in the future.

12. To date EPA has not revised this exclusion to contemplate other methods of keeping ODS materials from being released.

13. Based upon comments from Ohio EPA, Respondent submitted a revised application on January 4, 2019 (Application dated December 20, 2018), (2019 Application) was submitted to Ohio EPA. In addition to seeking an exemption from the storage and treatment of hazardous waste described above, Respondent also requested an exemption from receiving CFCs without a manifest, but rather with a Department of Transportation compliant hazardous materials shipping paper

which describes all the substantive emergency response information.

14. Pursuant to ORC § 3734.02(G) and OAC rule 3745-50-31, the Director has determined that Respondent's management of CFCs at the Facility described in the 2018 and 2019 Applications (collectively known as, Applications)is unlikely to adversely affect public health or safety or the environment so long as it is managed in accordance with these Orders and the Applications. Furthermore, issuance of these Orders is consistent with the conditions set forth in ORC § 3734.14 which encourages the recovery of resources from hazardous waste.

V. ORDERS

1. Respondent is hereby exempted from the requirements to obtain a hazardous waste installation and operation permit issued in accordance with ORC § 3734.05, as required by ORC § 3734.02(E)(2), and receive CFCs without a hazardous waste manifest provided Respondent complies with the Applications, including amendments described in Order No. 3. and the conditions herein. The exemption applies to all discarded CFCs stored and treated (reclaimed and destroyed) at the Facility.

2. Respondent may not exceed the maximum storage capacity at the Facility, 120,000 pounds and maintain secondary containment for all moveable cylinders in both the storage and plasma arc unit areas of the Facility.

3. Within 30 days of the effective date of these Orders, Respondent shall provide an updated Hazardous Material Security Plan and Emergency Action Plan. These plans shall include, but not limited to, applicable maps, container management, security controls, inspection monitoring and schedule, tank information, miscellaneous unit information regarding the PDU, emergency preparedness and contingency plan, facility description to prevent hazards and contamination, personnel training, and closure plan.

4. Within 30 days of the effective date of these Orders, Respondent shall provide documentation demonstrating Respondent has established financial assurance and liability coverages for the areas of the Facility subject to closure, in accordance with OAC rules 3745-55-42 through 3745-55-47.

5. Respondent shall maintain an operating record of the amount of CFCs received and disposition of CFCs after receipt (e.g., reclaim and reused as refrigerant, destroyed for a fee, destroyed for carbon off-site credit).

6. Prior to any employee destroying CFCs, Respondent shall maintain documentation at the Facility that all employees handling CFC's have been initially trained on the safety procedures found in Appendix I of the Applications. Respondent shall maintain documentation that each employee has been trained annually thereafter as described in Appendix I of the Application.

7. Respondent shall properly characterize any waste generated from the destruction of CFCs in accordance with OAC rule 3745-52-11 and subsequently manage the waste in accordance with all applicable laws and rules.

8. The Director may revoke the exemption granted in Order No. 1. for any reason including, but not limited to, a determination that Respondent's activities at the Facility adversely affect public health or safety or the environment and/or the activities are not being conducted in accordance with these Orders and/or the Applications.

9. If the Director revokes the exemption, the term of Order No. 1 expires, or Respondent ceases storing and treating hazardous waste CFCs, within sixty (60) days Respondent shall complete closure as described in the Applications.

10. The exemption granted in Order No. 1. shall terminate ten (10) years from the effective date of these Orders. The Director of Ohio EPA may grant a renewal of the exemption if Respondent applies to Ohio EPA for such renewal in writing at least sixty (60) days before the expiration date of the exemption, and provides a renewal exemption request which justifies the need for the renewal.

11. These Orders do not exempt Respondent from any other local, state, or federal laws or regulations which are otherwise applicable.

VI. TERMINATION

Respondent's obligations under these Orders shall terminate when Respondent certify in writing and demonstrates to the satisfaction of Ohio EPA that Respondent has performed all obligations under these Orders and Ohio EPA acknowledges, in writing, the termination of these Orders. If Ohio EPA does not agree that all obligations have been performed, then Ohio EPA will notify Respondent of the obligations that have not been performed, in which case Respondent shall have an opportunity to address any such deficiencies and seek termination as described above.

The certification shall contain the following attestation: "I certify that the information

contained in or accompanying this certification is true, accurate, and complete."

This certification shall be submitted by Respondent to Ohio EPA and shall be signed by a responsible official of Respondent. For purposes of these Orders, a responsible official is a (e.g., corporate officer) who is in charge of a principal business function of Respondent.

VII. OTHER CLAIMS

Nothing in these Orders shall constitute or be construed as a release from any claim, cause of action or demand in law or equity against any person, firm, partnership or corporation, not a party to these Orders, for any liability arising from, or related to, the operation of Respondent's Facility.

VIII. OTHER APPLICABLE LAWS

All actions required to be taken pursuant to these Orders shall be undertaken in accordance with the requirements of all applicable local, state and federal laws and regulations. These Orders do not waive or compromise the applicability and enforcement of any other statutes or regulations applicable to Respondent.

IX. RESERVATION OF RIGHTS

Ohio EPA and Respondent each reserve all rights, privileges and causes of action except as specifically waived in Section XII of these Orders.

X. NOTICE

All documents required to be submitted by Respondent pursuant to these Orders shall be addressed to:

Ohio Environmental Protection Agency
Northwest District Office
Division of Environmental Response and Revitalization
347 N. Dunbridge Road
Bowling Green, Ohio 43402
Attn: Hazardous Waste Program Manager

and Ohio EPA Central Office at the following address:

For mailings, use the post office box number:

Manager, Hazardous Waste Compliance Assurance Section
Ohio Environmental Protection Agency
Lazarus Government Center
Division of Environmental Response and Revitalization
P.O. Box 1049
Columbus, Ohio 43216-1049

For Electronic Mail delivery:
Mitchell.Mathews@epa.ohio.us
Colleen.Weaver@epa.ohio.us
Or as otherwise specified by Ohio EPA to Respondent

For deliveries to the building:

Manager, Hazardous Waste Compliance Assurance Section
Ohio Environmental Protection Agency
Lazarus Government Center
Division of Environmental Response and Revitalization
50 West Town Street
Columbus, Ohio 43215

or to such persons and addresses as may hereafter be otherwise specified in writing by Ohio EPA.

XI. MODIFICATIONS

These Orders, including the Applications, may be modified by agreement of the parties hereto. Modifications shall be in writing andthe effective date of the modifications shall be the date entered into the Director's journal.

XII. WAIVER

Respondent hereby waives the right to appeal the issuance, terms and conditions, and service of these Orders, and Respondent hereby waives any and all rights Respondent

may have to seek administrative or judicial review of these Orders either in law or equity.

Notwithstanding the preceding, Ohio EPA and Respondent agree that if these Orders are appealed by any other party to the Environmental Review Appeals Commission, or any court, Respondent retains the right to intervene and participate in such appeal. In such an event, Respondent shall continue to comply with these Orders notwithstanding such appeal and intervention unless these Orders are stayed, vacated or modified.

XIII. EFFECTIVE DATE

The effective date of these Orders is the date these Orders are entered into the Ohio EPA Director's journal.

XIV. SIGNATORY AUTHORITY

Each undersigned representative of a party to these Orders certifies that he or she is fully authorized to enter into these Orders and to legally bind such party to these Orders.

IT IS SO ORDERED AND AGREED:

Ohio Environmental Protection Agency

Laurie A. Stevenson
Director

IT IS SO AGREED:

A-Gas US, Inc., dba A-Gas Americas

Signature

25 JAN 2021
Date

Michael S Armstrong
Printed or Typed Name

President
Title

A-GAS
TOGETHER WE CAN

A-Gas
1100 Haskins Road
Bowling Green, Ohio 43402
USA

T [+1] 419-867-8990
E info.oh@agas.com

March 4, 2021

VIA ELECTRONIC MAIL
Laurie A. Stevenson, Director
Ohio Environmental Protection Agency
Attn: Sarah Miles
Office of Legal Services
50 West Town Street, Suite 700
Columbus, OH 43216-1049

Re: Trade Secrets Protection Request for A-Gas Americas Supplemental Response to § 3734.02(G) Waiver Request

Dear Director Stevenson:

The purpose of this letter is to request that certain information contained in A-Gas America's December 20, 2018, supplemental response for its waiver request made under § 3734.02(G) of the Ohio Revised Code, including all exhibits thereto and accompanying documentation (the ***Documents***), be protected from public disclosure as trade secrets pursuant to Ohio Revised Code § 3734.12(G).

The information redacted in the Documents is proprietary data and/or confidential business information entitled to protection as trade secrets under § 3734.12(G) of the Code. The name, quantity and commercial value of the refrigerant materials and the identity of A-Gas's commercial partners used in the destruction of recycling wastes and residues is sensitive information applicable to the commercial decisions of A-Gas's refrigerant destruction and recycling businesses. Details on A-Gas's materials handling and recycling and destruction processes, and specific information on A-Gas's facility layout, are confidential trade secrets used for commercial advantage and facility security purposes. A-Gas derives independent economic value from this information and would be at a competitive disadvantage if it were made public.

The information in the Documents for which trade secrets protection is requested is not readily known or ascertainable by A-Gas's competitors or other persons. A-Gas ensures that this information is not disclosed to competitors and the public by taking reasonable measures to ensure its secrecy, including the following:

- Making sensitive business and technical information available to employees within A-Gas's organization only on an as-needed basis;
- Transmitting business confidential information to business partners outside the organization only under the protection of legally binding non-disclosure agreements established prior to the disclosure of such confidential information.

A-Gas respectfully requests that Ohio EPA maintain the confidentiality of its trade secrets and has provided proposed public copies of the Documents that may be made available to the public. The

confidential information has been redacted in the public copies and a summary of the redacted content has been provided where possible.

Sincerely,

Mike S. Armstrong
President

Enclosures:

1. Proposed Public Copy of A-Gas Americas Supplemental Response to OEPA, dated December 20, 2018.

Sworn Statement of Accuracy

I, Michael S. Armstrong, certify that the information identified as confidential business information in the documents enumerated below and the accompanying statement identifying and justifying each claim are true and accurate to the best of my knowledge.

- Proposed Public Copy of A-Gas Americas Supplemental Response to OEPA, dated December 20, 2018.

Michael S. Armstrong
President

4 March 2021
Date

A-GAS
TOGETHER WE CAN

PUBLIC COPY
A-Gas
1100 Haskins Road
Bowling Green, Ohio 43402
USA

T [+1] 419-867-8990
E info.oh@agas.com

December 20, 2018

VIA FEDEX AND ELECTRONIC SUBMISSION
Craig W. Butler, Director
Ohio Environmental Protection Agency
Attn: Mitch Mathews
P.O. Box 1049
50 West Town Street, Suite 700
Columbus, OH 43216-1049

Re: Supplemental Response: Reclaimed Refrigerant Destruction – Waiver Request Section 3734.02(G), A-Gas Americas Refrigerant Reclamation Facility, 1100 Haskins Rd, Bowling Green, Ohio 43402

Dear Director Butler:

A-Gas US, Inc., d/b/a A-Gas Americas ("A-Gas" or "the Company"), on behalf of our subsidiary Reclamation Technologies, Inc., respectfully submits the following responses to the questions and comments presented by Ohio EPA relating to our Waiver Request under Section 3734.02(G), dated March 19, 2018.

A-Gas is requesting exemption from solid waste permitting requirements that may apply to the handling and destruction of halocarbon refrigerants using advanced plasma arc destruction at our Bowling Green refrigerant reclamation facility. OEPA comments on the waiver request were received November 16, 2018 and are reprinted below for your convenience, followed by our response. In addition, we have included the attached exhibits for your further reference. Please don't hesitate to contact A-Gas should you have any additional questions or comments on the initial request or the responses provided below.

I certify under penalty of law that this document and all attachments, including the initial March 19, 2018 exemption application, were prepared under my direction or supervision in accordance with a system designed to assure that qualified personnel properly gather and evaluate the information submitted. Based on my inquiry of the person or persons who manage the system, or those persons directly responsible for gathering the information, the information submitted is, to the best of my knowledge and belief, true, accurate, and complete. I am aware that there are significant penalties for submitting false information, including the possibility of fine and imprisonment for knowing violations.

Respectfully submitted,

Michael S. Armstrong
President and Chief Operating Officer

A-GAS
TOGETHER WE CAN

A-Gas
1100 Haskins Road
Bowling Green, Ohio 43402
USA

T [+1] 419-867-8990
E info.oh@agas.com

A-Gas Response to OEPA Comments

Comments for ORC 3734.02(G) Exemption Request
A-Gas Americas Refrigerant Reclamation Facility
1100 Haskins Road, Bowling Green, Ohio

Part A Application

1) Application needs to provide latitude and longitude of the facility.

   A-Gas Response: Latitude and longitude are 41.390397 -83.671418.

2) A-Gas should provide the industrial codes which best reflect the principle [sic] products or services provided.

   A-Gas Response: The primary Applicable NAICS codes is 325120.

3) A-Gas needs to provide ownership status and the status as to federal, state, private, public, or other entity.

   A-Gas Response: The Bowling Green facility is owned by [redacted]

4) **Topographic Map - OAC 3745-50-41(D)(6), OAC 3745-50-43(L)(1)-(4):** A topographic map should be provided (or other map if a topographic map is unavailable) with the following criteria:
   a. Map should extend one mile beyond the property boundaries of the facility
   b. Depiction of the facility and each of its intake and discharge structures
   c. Depiction of its hazardous waste storage facility areas
   d. Depiction of wells, springs, other surface water bodies, and drinking water wells listed in public records or otherwise known to the applicant within one quarter mile of the facility property boundary

A-Gas Response: Topographic map is attached hereto as Ex. S-1.1 thru S-1.3. Please note that per the application it is A-Gas's position that halocarbon refrigerants are not hazardous wastes. Also, A-Gas wishes to emphasize that all destruction of [redacted] material is conducted in a dedicated indoor area within the A-Gas facility, such that there are no intake and discharge structures and no storage facility areas other than indoors.

5) **Facility photographs (OAC 3745-50-43(H)(2)):** photographs should be provided showing proposed hazardous waste storage areas for the [redacted] containing [redacted].

A-Gas Response: Within 90 days of issuance of the waiver, A-Gas will submit an updated Hazardous Material Security Plan and updated Emergency Action Plan addressing and/or clarifying the following:

- A scale drawing of the facility showing the location of all past, present, and future treatment, storage, and disposal areas.
- Photographs of the facility clearly delineating the following:
  - All existing structures.
  - Existing treatment, storage, and disposal areas.
  - Sites of future treatment, storage, and disposal areas.

6) **Process Description and Design Capacities OAC 3745-50-43 (I):** A process description specific to storage of hazardous waste should be provided. Appendix E of the request provides a process description, but additional information is needed for the hazardous waste areas. This would include whether any tanks (drop tanks) are being used to store the hazardous waste received at the facility as described on Page 11. If tanks are being used to store hazardous waste, other sections of the permit may be applicable and require additional information. A-Gas also mentions filtration of halocarbons on Page 11 of the application. If the filtration is treating the

hazardous waste received at the facility, A-Gas needs to provide a description of the treatment and provide other information as required for treatment units. Since the Plasma Arc Furnace used to treat the hazardous waste [redacted] is classified as a miscellaneous unit, A-Gas needs to provide all applicable information for this unit.

A-Gas Response: The process for managing halocarbon material subject to this exemption is as follows:

Scope of Exemption. The only material anticipated to be covered by the exemption is the non-toxic halocarbon material [redacted] (aka [redacted] although it is possible that other halocarbons would occasionally be covered. The reason for the exemption is that some (but not all) quantities of [redacted] can show a false positive for hazardous characteristics applying the TCLP testing protocol (which legally does not apply to compressed gas refrigerants pursuant to federal EPA regulations, but which is used as a reference point to inform generator knowledge). [redacted]

Overview. [redacted] material at the Bowling Green facility will be managed in the same manner as other halocarbons (e.g., [redacted] and [redacted] as well as HCFCs, HFCs and halons) that are not covered by the exemption. However, as a condition of the exemption, A-Gas will specially mark, using a color-coded labelling system within the Bowling Green facility, all [redacted] material that shows hazardous characteristics under the TCLP testing procedure. All halocarbon material destined for destruction in the plasma destruction units (PDUs) follows protocols established by the California Air Resources Board ODS Destruction Protocol, adopted November 2014. In addition, the cradle-to-grave documentation and destruction process (for material that is ultimately destroyed for [redacted]) is audited by a third-party verification firm.

An Environmental Services Operation Process Flowchart is attached hereto as Ex. S-2, showing the following:

Sourcing.

[confidential details on sourcing of A-Gas materials]

Transportation.

[confidential details on transportation of A-Gas materials]

Inventory Control.

[confidential details on inventory control of A-Gas materials]

[confidential details on inventory control of A-Gas materials]

Sampling.

[confidential details on sampling of A-Gas materials]

Batching.

[confidential details on batching of A-Gas materials]

[confidential details on batching of A-Gas materials]

Reclamation.

[confidential details on A-Gas's reclamation process]

Resale or Destruction.

[confidential details on resale or destruction process of A-Gas materials]

PDU Destruction.

[confidential details on PDU destruction process of A-Gas materials]

[confidential details on PDU destruction process of A-Gas materials]

[confidential details on PDU destruction process of A-Gas materials]

7) **Hazardous Waste Specifications OAC 3745-50-43 (J):** Hazardous waste specifications as designated in OAC Chapter 3745-51 need provided for the hazardous waste to be stored at the facility. A-Gas did not provide waste codes (D019 and D022) but did provide an explanation of the hazardous waste on page 2 of the application that could be present in the [redacted]

   A-Gas Response: Per the March 19, 2018 application, carbon tetrachloride and chloroform would under certain circumstances be listed under waste codes D019 and D022. Halocarbon refrigerants that are reclaimed are exempted from RCRA under federal and state law. To the extent that [redacted] material is regulated, carbon tetrachloride and chloroform may be present (but are not always present in every batch) in trace amounts as manufacturing residuals; however, there is no hazardous waste present in the [redacted]. There are no specifications applicable to these manufacturing residuals, as this represents unreacted or by-product reactions inherent in the chemical as originally manufactured.

8) **Hazardous Waste Specifications OAC 3745-50-43 (J):** A-Gas should provide an estimate of the quantity of such wastes to be stored annually, and the processes to be used for such wastes. On page 11 of the application, A-Gas provides a description of the storage capacity of material that could be on-site for Plascon plasma unit destruction. However, a description of the quantities that can be stored annually specific to [redacted] that contains hazardous waste needs to be provided.

A-GAS
TOGETHER WE CAN

A-Gas Response: Quantities of [redacted] material at the facility at any one time may vary. However, the maximum amount of [redacted] material anticipated to be on-site at any time is not expected to exceed [redacted] The maximum amount of [redacted] material anticipated to be processed for destruction at the site annually is anticipated to not exceed [redacted].

9) **Certification of the application**: A-Gas should provide a signed/dated application with the certification language of OAC 3745-50-42 (D).
A-Gas Response: A-Gas hereby updates the March 19, 2018 application to include an updated signature page which includes the OAC 3745-50-42 (D) certification.

Section B- Facility Description

1) **Traffic Information OAC 3745-50-44 (A)(10):** A-Gas should provide: Traffic patterns on-site; estimated volume (number/type of vehicles); traffic control (turns across traffic lanes); access road surfacing; access road bearing capacity; traffic control signals

A-Gas Response: Within 90 days of issuance of the waiver, A-Gas will submit an updated Hazardous Material Security Plan and updated Emergency Action Plan addressing and/or clarifying the following:

- A traffic pattern diagram showing traffic patterns on-site; estimated volume (number/type of vehicles); traffic control (turns across traffic lanes); access road surfacing; access road bearing capacity; traffic control signals.

2) **Seismic Considerations OAC 3745-54-18(A):** A -Gas should state that portions of the facility where treatment, or storage of hazardous waste will be conducted shall not be located within sixty-one meters (two hundred feet) of a fault which has had displacement in Holocene time.

A-Gas Response: No portion of the facility where treatment or storage of hazardous waste will be conducted is located within sixty-one meters (two hundred feet) of a fault which has had displacement in Holocene time. OAC 3745-54-18(A) provides that facilities located in political jurisdictions other than those listed in 40 CFR Part 264 appendix VI are assumed to be in compliance with this requirement, and no part of Ohio is listed.

3) **Flood Plain Information:** Topographic Map

A-Gas Response: An elevation map of Wood County, OH is attached hereto as Ex. S-5. See also the topographic map of Bowling Green, Ex. S-1.1 thru S-1.3.

Section C Waste Characteristics

1) **Chemical and Physical analyses: OAC 3745-50-44 (A)(2), 3745-54-13:** Page 10 of the application states that halocarbons are tested in the BG facility's on-site AHRI certified laboratory. They are tested individually as a quality check and batching of the containers. Batching is done with halocarbons that are the same. A-Gas should specify these procedures specific to the [redacted] hazardous waste containers, to how they will be tested, batched, tracked through separately, etc.

A-Gas Response: Testing and batching of halocarbons using AHRI laboratory procedures is completed on all halocarbon material prior to decisions regarding ultimate fate of material, and therefore prior to any disposal decisions and generation of putative hazardous waste. Notwithstanding the foregoing, the standard operating protocol [redacted] is attached hereto as Ex. S-6.

Section D- Process Information – Container Storage

1) **Description of Containers OAC 3745-55-71, 3745-55-72:** Page 10 provided some generic information on containers of all halocarbons received. A-Gas needs to

provide information specific to the hazardous waste [redacted] containers received. A-Gas should provide the following:

- approximate number of each type of container relative to [redacted] hazardous waste containers
- construction materials, dimensions and usable volumes
- DOT specifications or other manufacturer specifications
- markings and labels relative to hazardous waste requirements.
- container condition (new, used, reconditioned)

A-Gas Response: [redacted] material is managed in containers of various specifications as indicted in the schematics of tanks, cylinders, and drums attached hereto as Ex. S-7.1 thru S-7.4. The approximate number of each type of container varies according to deliveries. The construction materials, dimensions and usable volumes are indicated in the exhibits. DOT specifications or other manufacturer specifications are indicated in the exhibits. All containers are made of or lined with materials which will not react with, and are otherwise compatible with, the materials to be stored, so that the ability of the container to contain the waste is not impaired. Note that [redacted] material destined for destruction in the Bowling Green PDUs is not shipped off-site and not subject to DOT transportation requirements; any [redacted] material shipped offsite is conservatively marked consistent with requirements for toxicity characteristics hazardous waste and compressed gas containers. [redacted] material covered by the exemption will be marked, labelled and inventoried with a color-coded label system to be placed on all relevant containers within the facility. Container condition (new, used, reconditioned) is inspected at every testing event and containers not in good condition (e.g., severe rusting, apparent structural defects) or leaking are transferred to a container that is in good condition or material is managed in some other way that complies with the requirements of Chapters 3745-54 to 3745-57 and 3745-205 of the Administrative Code.

2) **Container Management Practices OAC 3745-54-35, 3745-55-71, 3745-55-73, 3745-55-74:** A-Gas needs to provide information on aisle space available for movement of personnel, spill control equipment, fire protection equipment to any area of the facility in an emergency unless it can be satisfactorily demonstrated that aisle space is not needed for any of these purposes.

   A-Gas Response: A-Gas confirms that each of these practices is currently being followed at the Bowling Green facility. Within 90 days of issuance of the waiver, A-Gas will submit an updated Hazardous Material Security Plan and updated Emergency Action Plan addressing and/or clarifying that that the Bowling Green facility layout is designed and the containers managed in order to:

   - Provide aisle spacing that allows the unobstructed movement of personnel, fire protection equipment, spill control equipment, and decontamination equipment to any area of facility operation in an emergency;
   - Always keep containers closed during storage, except when it is necessary to add or remove material; containers are opened, handled, and stored in a manner which prevents rupture and leakage;
   - At least once during each period from Sunday to Saturday, areas where containers are stored are inspected for leaking containers and for deterioration of containers and the containment system caused by corrosion or other factors.
   - Require that all transfers of material are tracked in the A-Gas inventory system.

3) **Container Management Practices OAC 3745-54-35, 3745-55-71, 3745-55-73, 3745-55-74:** A-Gas describes on Page 10 of the application that containers of lower pressure [redacted] halocarbons are [redacted]

waste is not in good condition (e.g., severe rusting, apparent structural defects) or if it begins to leak, that the hazardous waste will be transferred from such container to a container that is in good condition.

A-Gas Response: See above response to Question D (3).

4) **Free liquids info needed, secondary containment?**

A-Gas Response: [redacted] material is a compressed gas and there are no free liquids handled in the Bowling Green facility. Photos of the closed bottom containment pallets are attached hereto as Ex. S-8.1 thru S-8.3.

Section F- Procedures to Prevent Hazards

1) **24-Hour Surveillance System OAC 3745-54-14 (B)(1):** Appendix H provides a Hazardous Materials Security Plan as described on Page 12 of the application. However, A-Gas should demonstrate that is has a 24-hour surveillance system in place (e.g., television monitoring or surveillance by guards or facility personnel) that continuously monitors or controls access. It wasn't clear in Appendix H if this was the case.

A-Gas Response: A-Gas confirms that each of these practices is currently being followed at the Bowling Green facility. A photo of the surveillance screen is attached hereto as Ex. S-9. Within 90 days of issuance of the waiver, A-Gas will submit an updated Hazardous Material Security Plan and updated Emergency Action Plan addressing and/or clarifying the following:

- 24-hour surveillance system in place (e.g., television monitoring or surveillance by guards or facility personnel) that continuously monitors or controls access.

2) **Barrier OAC 3745 54 14 (B)(2)(a):** Appendix H states all facilities have perimeter fencing in place. A-Gas should provide information specific to its BG location by providing photos or a schematic drawing of the perimeter fencing in place.

   A-Gas Response: A-Gas confirms that each of these practices is currently being followed at the Bowling Green facility, as indicated in the photos attached hereto as Ex. S-10. The entire facility is secured by fencing. Within 90 days of issuance of the waiver, A-Gas will submit an updated Hazardous Material Security Plan and updated Emergency Action Plan addressing and/or clarifying the following:

   - Security measures to prevent the unknowing entry, and minimize the possibility for the unauthorized entry, of persons or livestock onto the active portion of the facility;
   - Artificial or natural barrier (e.g., a fence in good repair or a fence combined with a cliff), which completely surrounds the active portion of the facility.

3) **Warning Signs OAC 3745 54 14 (C):** The application does not provide information on warning signs that are required at the active portions of the facility. Signs are required to have the legend: "Danger- Unauthorized Personnel Keep Out"

   A-Gas Response: A-Gas confirms that each of these practices is currently being followed at the Bowling Green facility, as indicated in the photos attached hereto as Ex. S-11. The facility currently has a Notice No Trespassing posting and is secured by locked fencing and key card access to the building at all times. Within 90 days of issuance of the waiver, A-Gas will submit an updated Hazardous Material Security Plan and updated Emergency Action Plan addressing and/or clarifying the following:

   - A requirement that a sign with the legend, "Danger - Unauthorized Personnel keep Out," must be posted at each entrance to the active portion of a facility, and at other locations, in sufficient numbers to be seen from any approach in the active portion. The legend must be written in English and be legible from a distance of at least twenty-five feet. Existing signs with a legend other than

"Danger -Unauthorized Personnel Keep Out" may be used if the legend on the sign indicates that only authorized personnel are allowed to enter the active portion, and that entry onto the active portion can be dangerous.

4) **General Inspection Requirements OAC 3745 50 44 (A)(5), 3745 54 15 (A), (B)(1) & (B)(2), 3745 54 33:** A-Gas provided inspection information on Page 12 of the application, however, more details are needed. A written schedule is needed for inspecting all monitoring equipment, safety and emergency equipment, security devices, and operating and structural equipment that are vital to respond to releases to the environment or threats to human health. This includes information that facility communications and alarms, fire protection equipment, spill control equipment are tested as necessary.

A-Gas Response: A-Gas confirms that each of these practices is currently being followed at the Bowling Green facility. A-Gas has previously provided calibration and certification reports. A-Gas contracts with [redacted] to remotely monitor our fire and security systems. Within 90 days of issuance of the waiver, A-Gas will submit an updated Hazardous Material Security Plan and updated Emergency Action Plan addressing and/or clarifying the following:

- A copy of the general inspection schedule required by paragraph (B) of rule 3745-54-15 of the Administrative Code, including specific requirements in paragraph (I) of rule 3745-55-93 and rules 3745-55-74, 3745-55-95, 3745-56-26, 3745-56-54, 3745-56-73, 3745-57-05, 3745-57-47, 3745-57-84, and 3745-57-92 of the Administrative Code;
- A written schedule for inspecting the facility for malfunctions and deterioration, operator errors, and discharges which may be causing or may lead to either: (1) release of hazardous waste constituents to the environment; (2) a threat to human health, with such regularity as to be able

to identify problems in time to correct them before such problems harm human health or the environment;

- A written schedule for inspecting monitoring equipment, safety and emergency equipment, security devices, and operating and structural equipment (such as dikes and sump pumps) that are important to preventing, detecting, or responding to environmental or human health hazards;
- Requirement that the inspection schedule shall be kept at the facility;
- Requirement that all facility communications or alarm systems, fire protection equipment, spill control equipment, and decontamination equipment, where required, shall be tested and maintained as necessary to assure its proper operation in time of emergency.

5) **Types of Problems OAC 3745 54 15(B)(3):** A-Gas needs to provide that the inspection schedule identifies the types of problems to look for during the inspections.

   A-Gas Response: A-Gas confirms that each of these practices is currently being followed at the Bowling Green facility. A copy of current inspection checklist/report is attached hereto as Ex. S-12. Within 90 days of issuance of the waiver, A-Gas will submit an updated Hazardous Material Security Plan and updated Emergency Action Plan addressing and/or clarifying the following:

   - Inspection schedule to identify and correct the types of problems (e.g., malfunctions or deterioration) which are to be looked for during the inspection (e.g., inoperative sump pump, leaking fitting, eroding dike, and other such problems).

6) **Frequency of Inspections OAC 3745 54 15 (B)(4):** A-Gas should provide the frequency of the above inspections on the schedule, and base frequency on the rate of possible deterioration of equipment and the probability of an environmental or

human health incident if the deterioration, malfunction, or operator error goes undetected between inspections. Areas subject to spills, such as loading and unloading areas, should be inspected daily when in use. The inspection schedule should also identify inspection terms and frequencies for storage of hazardous waste in containers.

A-Gas Response: A-Gas confirms that each of these practices is currently being followed at the Bowling Green facility. A copy of current inspection checklist/report is attached hereto as Ex. S-12. Within 90 days of issuance of the waiver, A-Gas will submit an updated Hazardous Material Security Plan and updated Emergency Action Plan addressing and/or clarifying the following:

- An inspection schedule setting the frequency of inspection based on the rate of deterioration of the equipment and the probability of an environmental or human health incident if the deterioration, malfunction, or any operator error goes undetected between inspections. Areas subject to spills, such as loading and unloading areas, shall be inspected daily when in use. At a minimum, the inspection schedule shall include the terms and frequencies called for in rules 3745-55-74, 3745-55-93, 3745-55-95, 3745-56-26, 3745-56-54, 3745-56-78, 3745-57-05, 3745-57-47, and 3745-57-92 of the Administrative Code, where applicable.

7) **Remedial Action OAC 3745-54-15 (C):** A-Gas does state on Page 12 that storage tanks are visually inspected daily with maintenance conducted when needed. A-Gas should state that any deterioration or malfunction of equipment or structures revealed by inspections will be remedied in time to prevent an environmental or human health hazard.

A-Gas Response: A-Gas confirms that each of these practices is currently being followed at the Bowling Green facility. Preventative maintenance is performed [redacted]. Integrity of containers is inspected to prevent

leakage. Equipment is calibrated regularly. Within 90 days of issuance of the waiver, A-Gas will submit an updated Hazardous Material Security Plan and updated Emergency Action Plan addressing and/or clarifying the following:

- General inspection requirements requiring personnel to remedy any deterioration or malfunction of equipment or structures which the inspection reveals on a schedule which ensures that the problem does not lead to an environmental or human health hazard. Where a hazard is imminent or has already occurred, remedial action shall be taken immediately.

8) **Inspection Logs OAC 3745-54-15 (D):** A-Gas should provide a statement that all facility inspections will be recorded in a log or summary and will be kept at the facility for a period of 3 years. Example logs should be provided which indicate the following: date and time of inspection, name of inspector, a notation of observations made, and the date and nature of any repairs or other remedial actions.

   A-Gas Response: A-Gas confirms that each of these practices is currently being followed at the Bowling Green facility. Within 90 days of issuance of the waiver, A-Gas will submit an updated Hazardous Material Security Plan and updated Emergency Action Plan addressing and/or clarifying the following:

   - A general inspection requirement that all inspections shall be recorded in an inspection log or summary. Records shall be kept for at least three years after the date of inspection. At a minimum, these records shall include the date and time of the inspection, the name of the inspector, a notation of the observations made, and the date and nature of any repairs or other remedial actions.

9) **Container Inspections OAC 3745-50-44 (A)(5), 3745 55 74:** A- Gas should demonstrate that all containers, containment systems, and container storage areas will be inspected weekly for leaks, spills and deterioration caused by corrosion or

other factors. It isn't clear exactly where the [redacted] hazardous waste containers will be stored at the facility.

A-Gas Response: A-Gas confirms that each of these practices is currently being followed at the Bowling Green facility. Photos of container storage and staging areas are attached hereto as Ex. S-8.1 thru 8.3. Within 90 days of issuance of the waiver, A-Gas will submit an updated Hazardous Material Security Plan and updated Emergency Action Plan addressing and/or clarifying the following:

- At least once during each period from Sunday to Saturday, areas where containers are stored shall be inspected for leaking containers and for deterioration of containers and the containment system caused by corrosion or other factors.

10) **Tank System Inspections OAC 3745-50-44 (A)(5), 3745-55-95:** A-Gas needs to provide more detail about whether tanks will be used to store hazardous waste.

A-Gas Response: A-Gas confirms that each of these practices is currently being followed at the Bowling Green facility. Within 90 days of issuance of the waiver, A-Gas will submit an updated Hazardous Material Security Plan and updated Emergency Action Plan addressing and/or clarifying the following:

- Schedule and procedure for inspecting overfill controls, [redacted] t (e.g., pressure or temperature gauges, monitoring wells) to ensure that the tank system is being operated according to the tank system's design, and to remedy any deterioration or malfunction that is found;
- Description of the established workplace practices at the facility;
- Requirement to notify OEPA pursuant to Rule 3745-55-96 of the Administrative Code within twenty-four hours after confirming a leak;
- Requirement to notify, if required, the National Response Center pursuant to 40 CFR Part 302 of a release;

- Inspection at least once each operating day of:
  - (1) above ground portions of the tank system, if any, to detect corrosion or releases of waste.
  - (2) the construction materials and the area immediately surrounding the externally accessible portion of the tank system, including the secondary containment system (e.g., dikes) to detect erosion or signs of releases of hazardous waste (e.g., wet spots, dead vegetation).
- Inspection at least weekly of tank systems that either use leak detection systems to alert facility personnel to leaks, or implement established workplace practices to ensure leaks are promptly identified, shall inspect at least weekly those areas described in paragraphs (C)(1) and (C)(2) of this rule. Use of the alternate inspection schedule shall be documented in the facility's operating record.
- Inspection at least once each operating day of ancillary equipment that is not provided with secondary containment, as described in paragraphs (F)(1) to (F)(4) of rule 3745-55-93 of the Administrative Code;
- Inspection of cathodic protection systems, if present, according to, at a minimum, the following schedule to ensure that the cathodic protection systems are functioning properly: (1) the proper operation of the cathodic protection system shall be confirmed within six months after initial installation and annually thereafter; (2) all sources of impressed current shall be inspected or tested, as appropriate, at least bimonthly (*i.e.,* every other month).

11) **Miscellaneous Unit Inspections OAC 3745-50-44(A)(5), 3745-57-92:** A-Gas needs to provide information on the inspection of the [redacted] as a miscellaneous hazardous waste unit to comply with the requirements of OAC rule 3745-57-91, and other applicable requirements.

A-Gas Response: The [redacted] plasma destruction unit is a device designed specifically for the destruction of compressed gas. It is not a hazardous waste treatment unit under the normal understanding of that term. The [redacted] units are self-contained and due to the nature of compressed gas, entirely sealed until the compressed gas is fed into the plasma arc chamber. Inspection of the [redacted] units is carried out in accordance with the manufacturer's technical specifications and manual.

Note that the [redacted] destruction process handles only halocarbon gases which are inert and non-toxic to human health and the environment, other than ozone depleting and greenhouse gas effects. The [redacted]s are placed entirely indoors in a secure facility and operate in an enclosed closed-pressure system. OEPA has already determined that air emissions are minimal and the saline by-product has been permitted by the local municipal wastewater authority, as demonstrated in the application. Even in the event of malfunction of the [redacted]s, the worst-case scenario would be release and rapid evaporation of nontoxic halocarbons which have no known health or environmental impacts other than ozone depleting and greenhouse gas effects. There is no reasonable scenario in which the halocarbon material or unit operation would affect any receptors or resources outside the facility structure (*i.e.*, the [redacted] building). Accordingly, no health or environmental impacts within the scope of the cited regulations are reasonably anticipated.

A-Gas confirms that each of these practices is currently being followed at the Bowling Green facility. Within 90 days of issuance of the waiver, A-Gas will submit an updated Hazardous Material Security Plan and updated Emergency Action Plan addressing and/or clarifying the following:

- Monitoring, testing, analytical data, inspections, response, and reporting procedures and frequencies shall ensure compliance with rules 3745-54-15, 3745-54-33, 3745-54-75, 3745-54-76, 3745-54-77, 3745-54-101, and 3745-57-91 of the Administrative Code as well as meet any additional requirements

needed to protect human health and the environment as specified in the exemption order;

- Confirmation that the PDUs are located, designed, constructed, operated, maintained, and closed in a manner that will ensure protection of human health and the environment, including the following:
    - Prevention of any releases that may have adverse effects on human health or the environment due to migration of waste constituents in the ground water or subsurface environment, considering all of the following: (1) The volume and physical and chemical characteristics of the waste in the unit, including the potential for migration through soil, liners, or other containing structures; (2) The hydrologic and geologic characteristics of the unit and the surrounding area; (3) The existing quality of ground water, including other sources of contamination and the cumulative impact of such contamination on the ground water; (4) The quantity and direction of ground water flow; (5) The proximity to and withdrawal rates of current and potential ground water users; (6) The patterns of land use in the region; (7) The potential for deposition or migration of waste constituents into subsurface physical structures, and into the root zone of food-chain crops and other vegetation; (8) The potential for health risks caused by human exposure to waste constituents; (9) The potential for damage to domestic animals, wildlife, crops, vegetation, and physical structures caused by exposure to waste constituents;
    - Prevention of any releases that may have adverse effects on human health or the environment due to migration of waste constituents in surface water, or wetlands, or on the soil surface, considering all of the following: (1) The volume and physical and chemical characteristics of the waste in the unit; (2) The effectiveness and reliability of containing,

confining, and collecting systems and structures in preventing migration; (3) The hydrologic characteristics of the unit and the surrounding area, including the topography of the land around the unit;(4) The patterns of precipitation in the region; (5) The quantity, quality, and direction of ground water flow; (6) The proximity of the unit to surface waters; (7) The current and potential uses of nearby surface waters and any water quality standards established for those surface waters; (8) The existing quality of surface waters and surface soils, including other sources of contamination and the cumulative impact of such contamination on surface waters and surface soils; (9) The patterns of land use in the region; (10) The potential for health risks caused by human exposure to waste constituents; (11) The potential for damage to domestic animals, wildlife, crops, vegetation, and physical structures caused by exposure to waste constituents;

- Prevention of any release that may have adverse effects on human health or the environment due to migration of waste constituents in the air, considering all of the following: (1) The volume and physical and chemical characteristics of the waste in the unit, including the waste's potential for the emission and dispersal of gases, aerosols, and particulates; (2) The effectiveness and reliability of systems and structures to reduce or prevent emissions of hazardous constituents to the air; (3) The operating characteristics of the unit; (4) The atmospheric, meteorologic, and topographic characteristics of the unit and the surrounding area; (5) The existing quality of the air, including other sources of contamination and the cumulative impact of such contamination on the air; (6) The potential health risks caused by human exposure to waste constituents; (7) The potential for damage to domestic animals, wildlife, crops, vegetation, and physical structures caused by exposure to waste constituents.

12) **Equipment Requirements OAC 3745-54-32:** A-Gas should describe the following emergency equipment at its facility: External communication devices that are immediately available at the scene of operations, emergency equipment available, demonstration that all personnel involved in the handling of hazardous waste have access to an internal alarm or emergency communications device.

A-Gas Response: A-Gas confirms that each of these practices is currently being followed at the Bowling Green facility. Within 90 days of issuance of the waiver, A-Gas will submit an updated Hazardous Material Security Plan and updated Emergency Action Plan addressing and/or clarifying the following:

- Required equipment necessary for hazards posed by material handled at the facility, including:
    - an internal communications or alarm system capable of providing immediate emergency instruction (voice or signal) to facility personnel;
    - a device, such as a telephone (immediately available at the scene of operations) or a hand-held two-way radio, capable of summoning emergency assistance from local police departments, fire departments, or Ohio EPA or local emergency response teams;
    - portable fire extinguishers, fire control equipment, including but not limited to, special extinguishing equipment, such as that using foam, inert gas, or dry chemicals, spill control equipment, and decontamination equipment; water at adequate volume and pressure to supply water hose streams, or foam producing equipment, or automatic sprinklers, or water spray systems.

13) **Aisle Space Requirement OAC 3745-54-35:** A-Gas should demonstrate that there is sufficient aisle space to allow the unobstructed movement of personnel, fire

protection equipment or spill control equipment to any area of facility operation in an emergency.

A-Gas Response: Within 90 days of issuance of the waiver, A-Gas will submit an updated Hazardous Material Security Plan and updated Emergency Action Plan addressing and/or clarifying the following:

- Aisle space shall be maintained to allow the unobstructed movement of personnel, fire protection equipment, spill control equipment, and decontamination equipment to any area of facility operation in an emergency.

14) **Arrangements/Agreements with Local Authorities: OAC 3745-54-37** need for services from local authorities?

A-Gas Response: A-Gas confirms that each of these practices is currently being followed at the Bowling Green facility. Within 90 days of issuance of the waiver, A-Gas will submit an updated Hazardous Material Security Plan and updated Emergency Action Plan addressing and/or clarifying the following:

- Arrangements with local authorities to familiarize police, fire departments, and local emergency response teams with the layout of the facility, properties of hazardous waste handled at the facility and associated hazards, places where facility personnel would normally be working, entrances to and roads inside the facility, and possible evacuation routes;
- Where more than one police and fire department may respond to an emergency, arrangements designating primary emergency authority to a specific police and a specific fire department, and arrangements with any others to provide support to the primary emergency authority;
- Arrangements with local emergency response team, emergency response contractors, and equipment suppliers;

- Arrangements to familiarize local hospitals with the properties of hazardous waste handled at the facility and the types of injuries or illnesses which could result from fires, explosions, or releases at the facility;
- Where local authorities decline to enter into such arrangements, the owner or operator shall document the refusal in the operating record.

15) **Unloading Operations OAC 3745-50-44(A)(8)(a):** A-Gas needs to provide information on the procedures, structures, or equipment used to prevent hazards in unloading operations (e.g., use of ramps or special forklifts).

A-Gas Response: A-Gas confirms that each of these practices is currently being followed at the Bowling Green facility. Within 90 days of issuance of the waiver, A-Gas will submit an updated Hazardous Material Security Plan and updated Emergency Action Plan addressing and/or clarifying the following:

- Description of procedures, structures, or equipment used at the facility to prevent hazards in unloading operations (for example, ramps, special forklifts).

16) **Run-off: OAC 3745-50-44 (A)(8)(b)**

A-Gas Response: A-Gas confirms that each of these practices is currently being followed at the Bowling Green facility. No halocarbon material is likely to be in liquid form long enough to cause runoff or migration of liquid material. Within 90 days of issuance of the waiver, A-Gas will submit an updated Hazardous Material Security Plan and updated Emergency Action Plan addressing and/or clarifying the following:

- Description of procedures, structures, or equipment used at the facility to prevent run-off from hazardous waste handling areas to other areas of the facility or environment, or to prevent flooding (for example, berms, dikes, trenches).

17) **Personnel Protection Equipment OAC 3745-50-44 (A)(8)(e):** A-Gas needs to provide information on PPE available to employees to prevent exposure to hazardous waste.

A-Gas Response: A-Gas confirms that each of these practices is currently being followed at the Bowling Green facility. Halocarbon material is nontoxic and not dangerous to employees, except hazards associated with compressed gas handling. Within 90 days of issuance of the waiver, A-Gas will submit an updated Hazardous Material Security Plan and updated Emergency Action Plan addressing and/or clarifying the following:

- Description of procedures, structures, or equipment used at the facility to prevent undue exposure of personnel to hazardous waste (for example, protective clothing).

Section G Contingency Plan

1) **OAC 3745-54-51, 3745-54-52(B) or 3745-65-51, 3745-65-52(B):** A-Gas provided an Emergency Action Plan in Appendix I to the application. The plan does not have a map for escape routes as stated on Pg 5. This needs to be included.

A-Gas Response: A-Gas confirms that each of these practices is currently being followed at the Bowling Green facility. Maps of escape routes from each area of the facility are attached hereto as Ex. S-13. Within 90 days of issuance of the waiver, A-Gas will submit an updated Hazardous Material Security Plan and updated Emergency Action Plan addressing and/or clarifying the following:

- Map for escape routes.

2) **OAC 3745-54-51, 3745-54-52(B) or 3745-65-51, 3745-65-52(B):** Rule citations on Pg 4 are incorrect as they are provided for generators and should be referring to rules for permitted hazardous waste facilities.

A-Gas Response: Within 90 days of issuance of the waiver, A-Gas will submit an updated Hazardous Material Security Plan and updated Emergency Action Plan addressing and/or clarifying the following:

- Correction of rule citations on p. 4.

3) **General Information OAC 3745-54-52**: A-Gas did not provide a response to explosions or a site plan.

A-Gas Response: Within 90 days of issuance of the waiver, A-Gas will submit an updated Hazardous Material Security Plan and updated Emergency Action Plan addressing and/or clarifying the following:

- Response procedures for explosions and site plan.

4) **Emergency Coordinators OAC 3745-54-52(D), 3745-54-55:** A- Gas designated an Incident Commander on each shift responsible for contacting emergency response personnel. The Incident Commander appears to have limited authority and is not the emergency coordinator. A-Gas needs to designate a primary (and secondary if needed) emergency coordinator and include a statement in the Emergency Action Plan that the coordinator is authorized to commit the necessary resources to implement the plan. Many people are listed in the Emergency Action Plan and it is unclear who is the primary point of contact. Home addresses and office and home phone numbers of all persons qualified to act as an emergency coordinator need to be provided. The plan should state an emergency coordinator is either on-site of on-call at all times.

A-Gas Response: Within 90 days of issuance of the waiver, A-Gas will submit an updated Hazardous Material Security Plan and updated Emergency Action Plan addressing and/or clarifying the following:

- Clarification of roles of Incident Commander and emergency coordinator;
- Designation of primary (and secondary if needed) emergency coordinator;

- Statement in the Emergency Action Plan that the coordinator is authorized to commit the necessary resources to implement the plan;
- Clarification of roles of all personnel listed in documents and designation of primary point of contact;
- Home addresses and office and home phone numbers of all persons qualified to act as an emergency coordinator;
- Statement that an emergency coordinator is either on-site of on-call at all times.

5) **Implementation OAC 3745-54-52 (A), 3745-54-51:** The Emergency Action Plan should describe when and how the contingency plan will be implemented immediately whenever there is a fire, explosion, or release of hazardous waste or hazardous waste constituents that could threaten human health or the environment. It is unclear the chain of command in the Emergency Action Plan. Incident Commanders only have limited capability and need to contact management for communications with government agencies. It is recommended that management be designated as emergency coordinators for implementation of the contingency plan.

   A-Gas Response: Within 90 days of issuance of the waiver, A-Gas will submit an updated Hazardous Material Security Plan and updated Emergency Action Plan addressing and/or clarifying the following:

   - How the contingency plan will be implemented immediately whenever there is a fire, explosion, or release of hazardous waste or hazardous waste constituents that could threaten human health or the environment;
   - Clarify the chain of command in the Emergency Action Plan, and clarify authority of Incident Commanders vis-à-vis communications with government agencies;

- Designate emergency coordinators for implementation of the contingency plan.

6) **Notification OAC 3745-54-56 (A) & (D):** A-Gas does not include information in the Emergency Action Plan that describes the methodology for immediate notification of necessary state or local agencies with designated response roles. It is unclear how the coordination/communication with these agencies is done in an immediate manner. The plan should describe what information should be provided to Ohio EPA and local authorities when a notification is made.

   A-Gas Response: Within 90 days of issuance of the waiver, A-Gas will submit an updated Hazardous Material Security Plan and updated Emergency Action Plan addressing and/or clarifying the following:

   - Methodology for immediate notification of necessary state or local agencies with designated response roles;
   - Clarify coordination/communication with agencies in an immediate manner;
   - Describe what information should be provided to Ohio EPA and local authorities when a notification is made.

7) **Identification of Hazardous Materials OAC 3745-54-56 (B):** The Emergency Action Plan needs to describe procedures for identification of hazardous materials involved in the emergency.

   A-Gas Response: Within 90 days of issuance of the waiver, A-Gas will submit an updated Hazardous Material Security Plan and updated Emergency Action Plan addressing and/or clarifying the following:

   - Description of procedures for identification of hazardous materials involved in the emergency.

8) **Identification of Hazardous Materials OAC 3745-54-56 (B):** The Emergency Action Plan should indicate that if possible, A-Gas will consult the facility operating record to determine which wastes are stored/treated in the affected area(s).

   A-Gas Response: Within 90 days of issuance of the waiver, A-Gas will submit an updated Hazardous Material Security Plan and updated Emergency Action Plan addressing and/or clarifying the following:

   - Procedure to consult the facility operating record to determine which wastes are stored/treated in the affected area(s).

9) **Identification of Hazardous Materials OAC 3745-54-56 (B):** A-Gas should identify areas of the facility that pose the most threat and potential dangers that exist in those areas.

   A-Gas Response: Within 90 days of issuance of the waiver, A-Gas will submit an updated Hazardous Material Security Plan and updated Emergency Action Plan addressing and/or clarifying the following:

   - Identification of areas of the facility that pose the most threat and potential dangers that exist in those areas.

10) **Assessment OAC 3745-54-56 (C) & (D):**A-Gas did not provide information about response to potential explosions at the facility. This information should be added to the Emergency Action Plan.

    A-Gas Response: Within 90 days of issuance of the waiver, A-Gas will submit an updated Hazardous Material Security Plan and updated Emergency Action Plan addressing and/or clarifying the following:

    - Procedures for response to potential explosions at the facility.

11) **Assessment OAC 3745-54-56 (C) & (D):** A-Gas should provide more clearly the criteria used to assess the possible hazards to human health and the environment that would result in the need for evacuation and notification of authorities. It is unclear which circumstances require an evacuation of the facility and who is making that determination.

A-Gas Response: Within 90 days of issuance of the waiver, A-Gas will submit an updated Hazardous Material Security Plan and updated Emergency Action Plan addressing and/or clarifying the following:

- Criteria used to assess the possible hazards to human health and the environment that would result in the need for evacuation and notification of authorities;
- Circumstances requiring an evacuation of the facility and who is making that determination.

12) **Control Procedures OAC 3745-54-52 (A):** A-Gas did not provide control procedures to be taken in the event of an explosion.

A-Gas Response: Within 90 days of issuance of the waiver, A-Gas will submit an updated Hazardous Material Security Plan and updated Emergency Action Plan addressing and/or clarifying the following:

- Control procedures to be taken in the event of an explosion.

13) **Control Procedures OAC 3745-54-52 (A):** The Emergency Action Plan should describe the closing of storm drains during a spill, fire or explosion event.

A-Gas Response: Within 90 days of issuance of the waiver, A-Gas will submit an updated Hazardous Material Security Plan and updated Emergency Action Plan addressing and/or clarifying the following:

- Closing of storm drains during a spill, fire or explosion event.

14) **Prevention of Recurrence or Spread of Fires Explosions, or Releases: OAC 3745 54-56 (E) & (F):** A- Gas should describe the necessary steps to be taken to ensure that explosions do not occur, reoccur or spread to other hazardous waste at the facility.

A-Gas Response: Within 90 days of issuance of the waiver, A-Gas will submit an updated Hazardous Material Security Plan and updated Emergency Action Plan addressing and/or clarifying the following:

- Necessary steps to be taken to ensure that explosions do not occur, reoccur or spread to other hazardous waste at the facility.

15) **Prevention of Recurrence or Spread of Fires Explosions, or Releases: OAC 3745- 54-56 (E) & (F):**A-Gas should state in its plan that the measures taken to ensure that fires, explosions, and releases do not occur, recur, or spread to other hazardous waste at the facility must include, where applicable, stopping processes and operations, and removing or isolating containers. The plan did provide information about collecting and containing released waste.

A-Gas Response: Within 90 days of issuance of the waiver, A-Gas will submit an updated Hazardous Material Security Plan and updated Emergency Action Plan addressing and/or clarifying the following:

- Measures taken to ensure that fires, explosions, and releases do not occur, recur, or spread to other hazardous waste at the facility, including, where applicable, stopping processes and operations, and removing or isolating containers;
- Information about collecting and containing released waste.

16) **Prevention of Recurrence or Spread of Fires Explosions, or Releases: OAC 3745- 54-56 (E) & (F):** A-Gas should state in the Emergency Action Plan that if the

facility stops operations in response to a fire, explosion, or release the emergency coordinator will monitor for leaks, pressure buildup, gas generation or ruptures in valves, pipes or other equipment whenever this is appropriate.

A-Gas Response: Within 90 days of issuance of the waiver, A-Gas will submit an updated Hazardous Material Security Plan and updated Emergency Action Plan addressing and/or clarifying the following:

- Procedures if the facility stops operations in response to a fire, explosion, or release the emergency coordinator to monitor for leaks, pressure buildup, gas generation or ruptures in valves, pipes or other equipment whenever this is appropriate.

17) **Storage and Treatment of Released Material: OAC 3745-54-56 (G):** A-Gas should provide information in the Emergency Action Plan for treatment, storage, or disposal of any material that results from a fire, or explosion at the facility. Spills and releases were discussed on page 18, however, A-Gas should include a statement that wastes generated during these events will be evaluated for hazardous waste constituents.

A-Gas Response: Within 90 days of issuance of the waiver, A-Gas will submit an updated Hazardous Material Security Plan and updated Emergency Action Plan addressing and/or clarifying the following:

- Information for treatment, storage, or disposal of any material that results from a fire, or explosion at the facility;
- Procedures that wastes generated during these events will be evaluated for hazardous waste constituents.

18) **Post-Emergency Equipment Maintenance OAC 3745-54-56 (H)(2)**: A- Gas should describe procedures for ensuring that all emergency equipment listed in the

contingency plan is cleaned and fit for its intended use before operations are resumed.

A-Gas Response: Within 90 days of issuance of the waiver, A-Gas will submit an updated Hazardous Material Security Plan and updated Emergency Action Plan addressing and/or clarifying the following:

- Procedures for ensuring that all emergency equipment listed in the contingency plan is cleaned and fit for its intended use before operations are resumed.

19) **Container Spills and Leakage OAC 3745-54-52, 3745-54-56 (G), 3745-55-71:** A-Gas specified procedures to be used when responding to container spills or leakage, but also needs to include procedures and timing for expeditious removal of spilled waste and repair or replacement of the container(s). This should include how that container will be removed, overpacked, or isolated, and how the area in which the containers were located will be decontaminated after the event.

A-Gas Response: Within 90 days of issuance of the waiver, A-Gas will submit an updated Hazardous Material Security Plan and updated Emergency Action Plan addressing and/or clarifying the following:

- Procedures to be used when responding to container spills or leakage, including procedures and timing for expeditious removal of spilled waste and repair or replacement of the container(s);
- Description of how that container will be removed, overpacked, or isolated, and how the area in which the containers were located will be decontaminated after the event.

20) **Emergency Equipment OAC 3745-54-52 (E):** A- Gas needs to include in the Emergency Action Plan a list of all emergency equipment at the facility, including, but not limited to, fire extinguishing systems, spill control equipment,

communications and alarm systems (internal and external), and decontamination equipment. This should include the location, specifications, and capabilities of the emergency equipment.

A-Gas Response: Within 90 days of issuance of the waiver, A-Gas will submit an updated Hazardous Material Security Plan and updated Emergency Action Plan addressing and/or clarifying the following:

- List of all emergency equipment at the facility, including, but not limited to, fire extinguishing systems, spill control equipment, communications and alarm systems (internal and external), and decontamination equipment specifying the location, specifications, and capabilities of the emergency equipment.

21) **Coordination Agreements OAC 3745-54-52 (C), 3745-54-37:** A-Gas should describe arrangements with Ohio EPA emergency response teams, emergency response contractors, and equipment suppliers. A-Gas should state in the plan that arrangements have been made with local hospitals to familiarize them with the properties of hazardous waste handled at the facility and types of injuries or illnesses which could result from fires, explosions, or releases at the facility and state that the facility will document refusal to enter into a coordination agreement.

A-Gas Response: Within 90 days of issuance of the waiver, A-Gas will submit an updated Hazardous Material Security Plan and updated Emergency Action Plan addressing and/or clarifying the following:

- Description of arrangements with Ohio EPA emergency response teams, emergency response contractors, and equipment suppliers;
- Statement that arrangements have been made with local hospitals to familiarize them with the properties of hazardous waste handled at the facility and types of injuries or illnesses which could result from fires, explosions, or releases at the facility;

- Statement that the facility will document refusal to enter into a coordination agreement.

22) **Evacuation Plan OAC 3745-54-52 (F):** A-Gas should provide signals used at the facility to begin evacuation.

A-Gas Response: The facility currently uses sirens and strobe lights to indicate evacuation. Within 90 days of issuance of the waiver, A-Gas will submit an updated Hazardous Material Security Plan and updated Emergency Action Plan addressing and/or clarifying the following:

- Description of signals used at the facility to begin evacuation.

23) **Evacuation Plan OAC 3745-54-52 (F):** A-Gas should provide planned and alternate evacuation routes in the Emergency Action Plan. On Page 5 of the plan, A-Gas refers to escape routes being shown in Appendix B. Appendix B was missing from the attachments.

A-Gas Response: Evacuation routes are shown in Ex. S-13. Within 90 days of issuance of the waiver, A-Gas will submit an updated Hazardous Material Security Plan and updated Emergency Action Plan addressing and/or clarifying the following:

- Appendix B showing planned and alternate evacuation routes in the Emergency Action Plan.

24) **Required Reports OAC 3745-54-56 (J):** A-Gas should add to the plan that the time, date, and details of any incident that requires implementing the contingency plan must be noted in the operating record of the facility.

A-Gas Response: Within 90 days of issuance of the waiver, A-Gas will submit an updated Hazardous Material Security Plan and updated Emergency Action Plan addressing and/or clarifying the following:

- Requirement that the time, date, and details of any incident that requires implementing the contingency plan must be noted in the operating record of the facility.

25) **Required Reports OAC 3745-54-56 (J):** The plan should state that a report will be submitted to the director within 15 days after an incident that requires implementation of the contingency plan, and will contain the following information:

a) name, address, and telephone number of the owner or operator

b) name, address, and telephone number of the facility

c) date, time and type of incident

d) name and quantity of material(s) involved

e) the extent of any injuries

f) an assessment of actual or potential hazards to human health or the environment

g) estimated quantity and disposition of recovered material that resulted from the incident, and

h) other information as may be required by the director.

A-Gas Response: Within 90 days of issuance of the waiver, A-Gas will submit an updated Hazardous Material Security Plan and updated Emergency Action Plan addressing and/or clarifying the following:

- A requirement that a report will be submitted to OEPA within 15 days after an incident that requires implementation of the contingency plan, and will contain the following information:
  - name, address, and telephone number of the owner or operator;
  - name, address, and telephone number of the facility;
  - date, time and type of incident;
  - name and quantity of material(s) involved;
  - the extent of any injuries;

- an assessment of actual or potential hazards to human health or the environment;
- estimated quantity and disposition of recovered material that resulted from the incident; and
- other information as may be required by the director.

26) **Copies of the contingency plan OAC rule 3745-54-53:** A-Gas must include provisions for maintaining a copy of the contingency plan at the facility and for distributing copies to all local police departments, fire departments, hospitals, Ohio EPA, and local emergency response teams.

A-Gas Response: Within 90 days of issuance of the waiver, A-Gas will submit an updated Hazardous Material Security Plan and updated Emergency Action Plan addressing and/or clarifying the following:

- Provisions for maintaining a copy of the contingency plan at the facility and for distributing copies to all local police departments, fire departments, hospitals, Ohio EPA, and local emergency response teams.

27) **Amendment of the contingency plan OAC rule 3745-54-54:** A- Gas must state in the contingency plan that it will be immediately amended (in accordance with OAC 3745-50) when the plan fails in an emergency.

A-Gas Response: Within 90 days of issuance of the waiver, A-Gas will submit an updated Hazardous Material Security Plan and updated Emergency Action Plan addressing and/or clarifying the following:

- A requirement that the contingency plan be immediately amended (in accordance with OAC 3745-50) when the plan fails in an emergency.

28) **Amendment of the contingency plan OAC rule 3745-54-54:** A-Gas must state in the Emergency Action Plan that it will be immediately amended (in accordance with OAC 3745-50) when a change is required by the director.

A-Gas Response: Within 90 days of issuance of the waiver, A-Gas will submit an updated Hazardous Material Security Plan and updated Emergency Action Plan addressing and/or clarifying the following:

- A requirement that the contingency plan be immediately amended (in accordance with OAC 3745-50) when required by OEPA.

Section H Personnel Training

1) **Outline of training OAC rules 3745-50-44 (A)(12), 3745 54 16 (A)(1)** A-Gas must provide an outline of both the introductory and continuing training programs used at the facility to prepare personnel to operate or maintain the facility in a safe manner, and to perform their duties in a way to ensure the facility's compliance with the hazardous waste facility standards.

A-Gas Response: A-Gas [redacted] Within 90 days of issuance of the waiver, A-Gas will submit an updated Hazardous Material Security Plan and updated Emergency Action Plan addressing and/or clarifying the following:

- A Training Plan as an addendum to its Contingency Plan, including the introductory and continuing training programs used at the facility to prepare personnel to operate or maintain the facility in a safe manner, and to perform their duties in a way to ensure the facility's compliance with the hazardous waste facility standards.

2) **Outline of Training OAC rules 3745-50-44 (A)(12), 3745 54 16 (A)(1):** A-Gas must include a brief description on how training will be designed to meet actual job tasks. Note that on the job training may be used to comply with these requirements.

   A-Gas Response: Within 90 days of issuance of the waiver, A-Gas will submit an updated Hazardous Material Security Plan and updated Emergency Action Plan addressing and/or clarifying the following:

   - A Training Plan as an addendum to its Contingency Plan, including a description on how training will be designed to meet actual job tasks, for example, on-the-job training.

3) **Training Director OAC 3745-54-16 (A)(2):** A-Gas must demonstrate that the training program is directed by a person trained in hazardous waste management procedures. Minimum training for the training director may include OSHA Hazardous Waste Operations and Emergency Response (29 CFR 1910.120 (c)(7)(e)).

   A-Gas Response: Within 90 days of issuance of the waiver, A-Gas will submit an updated Hazardous Material Security Plan and updated Emergency Action Plan addressing and/or clarifying the following:

   - A Training Plan requiring that training be directed by a person trained in hazardous waste management procedures such as OSHA Hazardous Waste Operations and Emergency Response (29 CFR 1910.120 (c)(7)(e)).

4) **Relevance of Training to Job Position: OAC rule 3745 54 16 (A)(2):** A-Gas should demonstrate that the training program provides facility personnel with instruction on hazardous waste management procedures (including contingency plan implementation) that are relevant to the positions they hold. Page 6 of the Emergency Action Plan states that employees will receive training on evacuation

routes and rally points, evacuation procedures and the contents of the document when they are first hired as part of their new hire orientation.

A-Gas Response: Within 90 days of issuance of the waiver, A-Gas will submit an updated Hazardous Material Security Plan and updated Emergency Action Plan addressing and/or clarifying the following:

- A Training Plan for facility personnel with instruction on hazardous waste management procedures (including contingency plan implementation) that are relevant to the positions they hold.

5) **Emergency Response Training OAC rule3745 54 16 (A)(3)** A-Gas must demonstrate that the training program is designed to ensure that facility personnel are able to respond effectively to emergencies and are familiar with emergency procedures, emergency equipment, and emergency systems. A-Gas stated in the Emergency Action Plan that employees would be trained but no training outline was provided.

A-Gas Response: Within 90 days of issuance of the waiver, A-Gas will submit an updated Hazardous Material Security Plan and updated Emergency Action Plan addressing and/or clarifying the following:

- A Training Plan designed to ensure that facility personnel are able to respond effectively to emergencies and are familiar with emergency procedures, emergency equipment, and emergency systems.

6) **Implementation of Training Program OAC 3745 54 16 (B):** A- Gas must provide a training program which includes instruction in the following areas (as applicable):
(1) procedures for using, inspecting, repairing and replacing facility emergency and monitoring equipment-
(2) key parameters for automatic waste feed cut off systems – a description needs provided

(3) communications or alarm systems – not clear where phones or alarm systems are located or how the alarm is sounded/who sounds the alarm.
(4) response to fires or explosions – no response to explosions is included
(5) shutdown of operations – a description of operations shut down is needed

A-Gas Response: Within 90 days of issuance of the waiver, A-Gas will submit an updated Hazardous Material Security Plan and updated Emergency Action Plan addressing and/or clarifying the following:

- A Training Plan addressing the following areas:
  - (1) procedures for using, inspecting, repairing and replacing facility emergency and monitoring equipment;
  - (2) key parameters for automatic waste feed cut off systems;
  - (3) communications or alarm systems, including where phones or alarm systems are located or how the alarm is sounded/who sounds the alarm;
  - (4) response to fires or explosions;
  - (5) shutdown of operations.

7) **Implementation of Training Program OAC 3745 54 16 (B):** A-Gas must document that employees will not work in unsupervised positions until they have completed the training requirements.

A-Gas Response: Within 90 days of issuance of the waiver, A-Gas will submit an updated Hazardous Material Security Plan and updated Emergency Action Plan addressing and/or clarifying the following:

- A requirement that employees will not work in unsupervised positions until they have completed the training requirements.

8) **Implementation of Training Program OAC 3745 54 16 (B):** A-Gas must provide a training matrix or other tracking form that demonstrates that the training

requirements are tracked at the facility to ensure that each person receives the training relevant to their position in a timely manner (Paragraphs (B) and (C) of OAC 3745-54-16). This matrix should include each employee's start date and dates required training is completed.

A-Gas Response: Within 90 days of issuance of the waiver, A-Gas will submit an updated Hazardous Material Security Plan and updated Emergency Action Plan addressing and/or clarifying the following:

- A training matrix or other tracking form that demonstrates that the training requirements are tracked at the facility to ensure that each person receives the training relevant to their position in a timely manner (Paragraphs (B) and (C) of OAC 3745-54-16), including each employee's start date and dates required training is completed.

9) **Training Frequency OAC 3745 54 16 (C):** A-Gas must demonstrate that facility personnel have and will continue to take part in an annual review of the hazardous waste training program. The Emergency Action Plan, Pg 6, states that employees will receive training whenever their responsibilities under the Emergency Action Plan change.

A-Gas Response: Within 90 days of issuance of the waiver, A-Gas will submit an updated Hazardous Material Security Plan and updated Emergency Action Plan addressing and/or clarifying the following:

- A training matrix or other tracking form that demonstrates that personnel have and will continue to take part in an annual review of the hazardous waste training program.

10) **Job Titles OAC 3745 54 16 (D)(1):** A-Gas must provide job titles for each position at the facility that is involved with hazardous waste management and evidence that

the names of the employees filling each of these positions is kept on record at the facility.

A-Gas Response: Within 90 days of issuance of the waiver, A-Gas will submit an updated Hazardous Material Security Plan and updated Emergency Action Plan addressing and/or clarifying the following:

- A training matrix or other tracking form recording the names of the employees filling each of these positions to be kept on record at the facility.

11) **Job Descriptions OAC 3745-54-16 (D)(2):** provide written job descriptions for each position at the facility involved with hazardous waste management. Job descriptions should include the requisite skill, education, or other qualifications, and other duties of employees assigned to each position consistent to the degree of specificity of similar position descriptions at the facility.

A-Gas Response: Within 90 days of issuance of the waiver, A-Gas will submit an updated Hazardous Material Security Plan and updated Emergency Action Plan addressing and/or clarifying the following:

- Written job descriptions for each position at the facility involved with hazardous waste management, including the requisite skill, education, or other qualifications, and other duties of employees assigned to each position consistent to the degree of specificity of similar position descriptions at the facility.

12) **Training Descriptions OAC 3745-54-16 (D)(3):** A-Gas should state that a written description of the type and amount of introductory and continuing training that will be given to each person filling a position related to hazardous waste management at the facility will be kept on record at the facility.

A-Gas Response: Within 90 days of issuance of the waiver, A-Gas will submit an updated Hazardous Material Security Plan and updated Emergency Action Plan addressing and/or clarifying the following:

- A requirement, and documentation in the training matrix or other tracking form, that a written description of the type and amount of introductory and continuing training that will be given to each person filling a position related to hazardous waste management at the facility will be kept on record at the facility.

13) **Training Records OAC 3745-54-16 (D)(4) & (E):** A- Gas should demonstrate that it will maintain records to document that the training or job experience has been given to or completed by facility personnel. A- Gas should state that training records on current personnel will be kept until closure of the facility, and that training records on former employees will be kept for at least 3 years from the date the employee last worked at the facility

A-Gas Response: Within 90 days of issuance of the waiver, A-Gas will submit an updated Hazardous Material Security Plan and updated Emergency Action Plan addressing and/or clarifying the following:

- A training matrix or other tracking form documenting that training or job experience has been given to or completed by facility personnel.
- Requirement that training records on current personnel will be kept until closure of the facility, and that training records on former employees will be kept for at least 3 years from the date the employee last worked at the facility.

Section I – Closure Plan

1. **Inclusion of a closure plan.** See OAC rules 3745-55-12 and 3745-57-51 for reference of contents of a closure plan.

A-Gas Response: Within 90 days of issuance of the waiver, A-Gas will submit a closure plan documenting that any [redacted] material that is stored on-site [redacted] will be handled as a hazardous waste and transported to a RCRA permitted hazardous waste incinerator for destruction. The maximum amount of [redacted] that is likely to be onsite at any one time is [redacted]. Destruction at a RCRA permitted hazardous waste facility typically does not exceed [redacted]. Transportation costs are typically [redacted] for this volume of material and fees are typically [redacted]. Accordingly, the maximum cost of disposing of material that is not able to be managed onsite would be approximately [redacted], which would be covered by [redacted].

Section J - Financial Assurance and Liability Coverage

1. **Inclusion of closure cost estimate (third party) and submittal of financial assurance mechanism.** See OAC rule 3745-55-42 for reference to closure cost estimate. See OAC rule 3745-55-43 for reference to financial assurance mechanisms, paragraph (C) discusses surety bonds and paragraph (D) discusses letter of credit.

   A-Gas Response: Within 90 days of issuance of the waiver, [redacted]

2. **Obtaining liability coverage for sudden accidental occurrences.** See OAC rule 3745-55-47(A) for reference.

   A-Gas Response: A-Gas [redacted] Within 90 days of issuance of the waiver, A-Gas will submit the appropriate certificates of insurance.

* * *

Exhibit S-1.1

Topographic Map of Bowling Green, OH

PUBLIC COPY

U.S. DEPARTMENT OF THE INTERIOR
U. S. GEOLOGICAL SURVEY

The National Map US Topo

BOWLING GREEN NORTH QUADRANGLE
OHIO
7.5-MINUTE SERIES

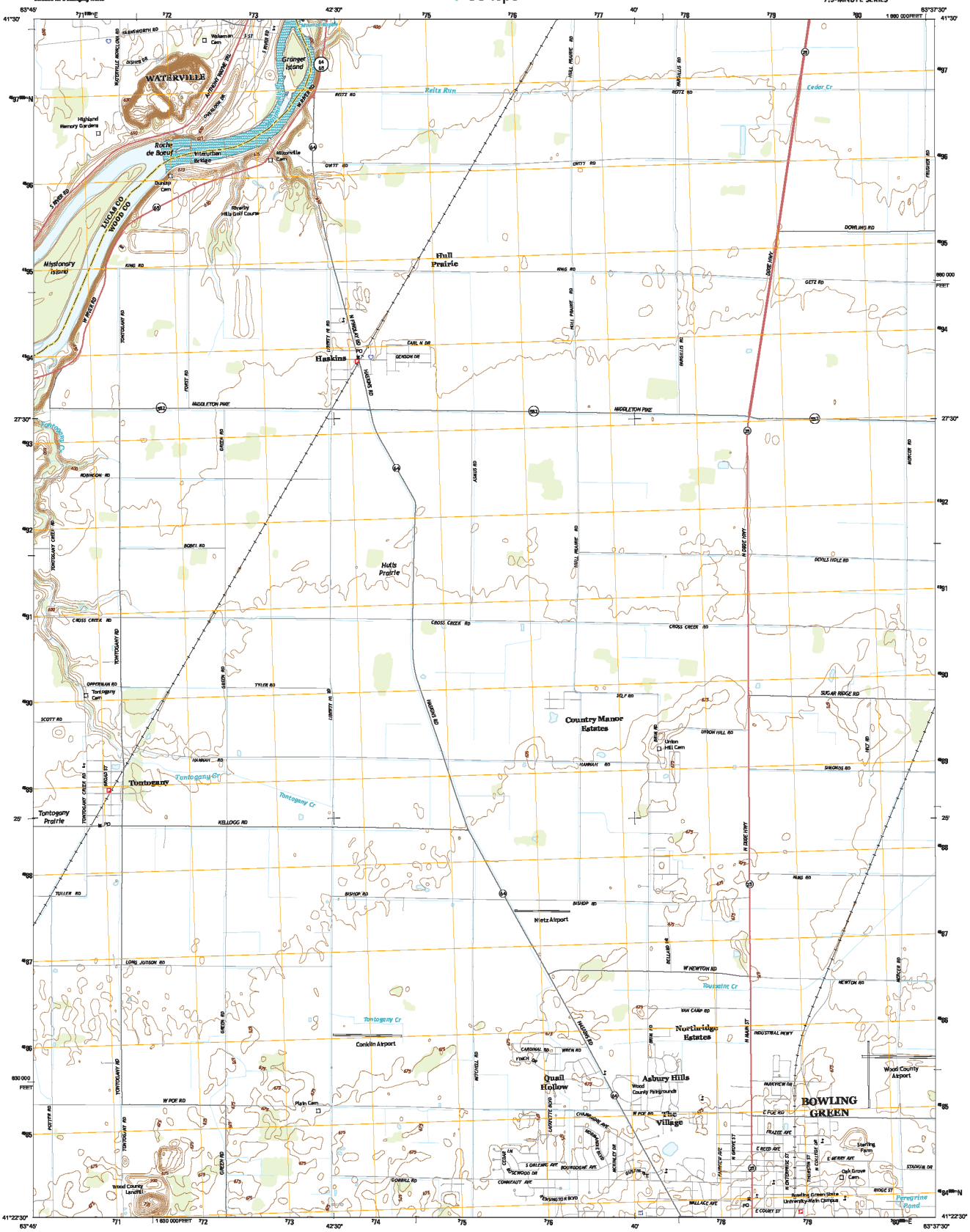

Produced by the United States Geological Survey
North American Datum of 1983 (NAD83)
World Geodetic System of 1984 (WGS84). Projection and 1 000-meter grid: Universal Transverse Mercator, Zone 17T
10 000-foot ticks: Ohio Coordinate System of 1983 (north zone)

This map is not a legal document. Boundaries may be generalized for this map scale. Private lands within government reservations may not be shown. Obtain permission before entering private lands.

Imagery.....NAIP, October 2011
Roads.....©2006-2013 TomTom
Names.....GNIS, 2013
Hydrography.....National Hydrography Dataset, 2011
Contours.....National Elevation Dataset, 2010
Boundaries.....Census, BIWC, BLC, USGS, 1972 - 2012
Public Land Survey System.....BLM, 2013

UTM GRID AND 2013 MAGNETIC NORTH DECLINATION AT CENTER OF SHEET

U.S. National Grid
100,000-m Square ID
NF
Grid Zone Designation 17T

SCALE 1:24 000

KILOMETERS 1 0.5 0 1 2
METERS 1000 500 0 1000 2000
MILES 1 0.5 0 1
FEET 1000 0 1000 2000 3000 4000 5000 6000 7000 8000 9000 10000

CONTOUR INTERVAL 5 FEET
NORTH AMERICAN VERTICAL DATUM OF 1988

This map was produced to conform with the National Geospatial Program US Topo Product Standard, 2011. A metadata file associated with this product is draft version 0.6.15

OHIO
QUADRANGLE LOCATION

Whitehouse	Maumee	Rossford
Grand Rapids	Bowling Green North	Dunbridge
Weston	Bowling Green South	Jerry City

ADJOINING 7.5' QUADRANGLES

ROAD CLASSIFICATION
Expressway
Secondary Hwy
Ramp
Local Connector
Local Road
4WD
Interstate Route
US Route
State Route

BOWLING GREEN NORTH, OH
2013

MAP NO. 41083F8NE

Exhibit S-1.2

Zoning Map of Bowling Green, OH

CITY OF BOWLING GREEN OHIO
ZONING CLASSIFICATIONS

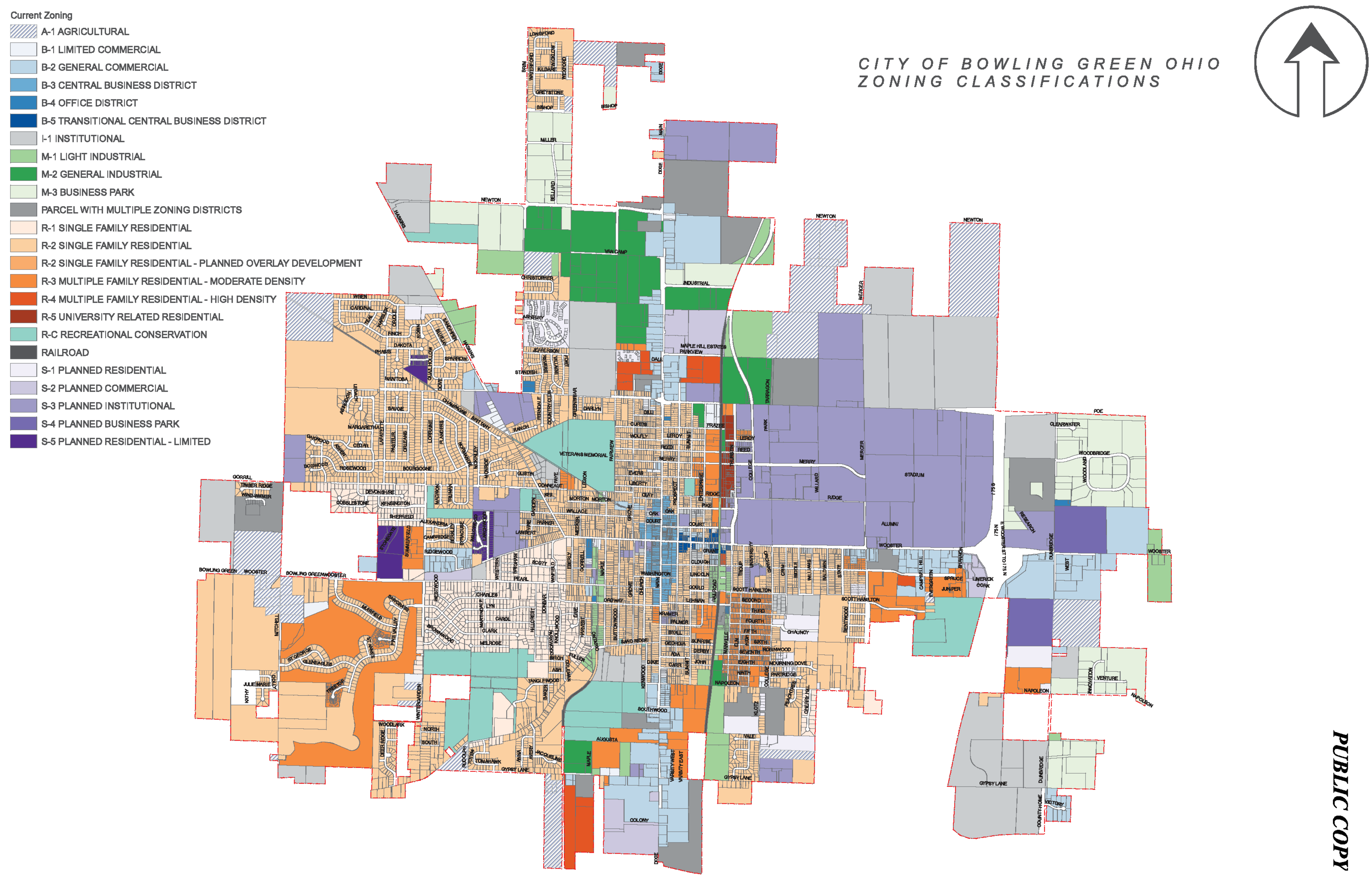

PUBLIC COPY

Exhibit S-1.3

Street Map of Bowling Green, OH

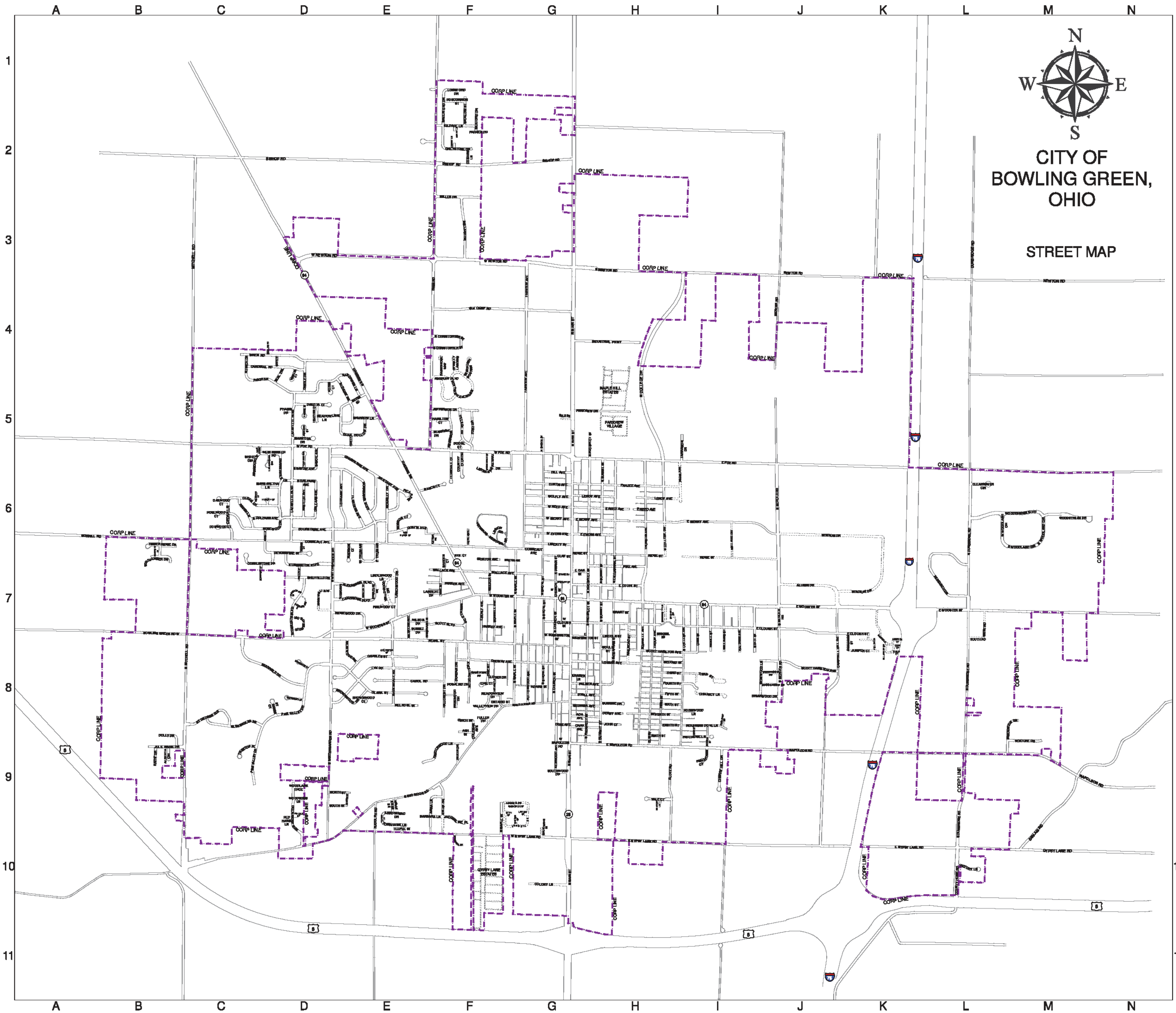

PUBLIC STREETS

PRIVATE STREETS

PUBLIC COPY

Rev Date: 12/13/201

Exhibit S-2

Operations Process Flowcharts

[Depicts Trade Secret or Proprietary Data]

[Depicts Trade Secret or Proprietary Data]

[Depicts Trade Secret or Proprietary Data]

[Depicts Trade Secret or Proprietary Data]

Exhibit S-3.1

Bill of Lading #1

RAPID RECOVERY®
PART OF A-GAS

STRAIGHT BILL OF LADING

[Depicts Trade Secret or Proprietary Data]

PUBLIC COPY

36019441
TICKET NUMBER

CAT SCALE®

CERTIFIED AUTOMATED TRUCK SCALE

CAT SCALE COMPANY
P.O. BOX 630
WALCOTT, IA 52773
(563) 284-6263
www.catscale.com

THE CAT SCALE GUARANTEE

The CAT Scale Company guarantees that our scales will give an accurate weight. What makes us different from other scale companies is that we back up our guarantee with cash.©

WEIGH WHAT WE SAY OR WE PAY®

If you get an overweight fine from the state **AFTER** one of our CAT Scales showed a legal weight, we will immediately check our scale and we will:

(1) Reimburse you for the cost of the overweight fine if our scale is wrong, **OR**
(2) A representative of CAT Scale Company will appear in court **WITH** the driver as an expert witness if we believe our scale was correct.

IF YOU SHOULD GET AN OVERWEIGHT FINE, YOU SHOULD DO THE FOLLOWING TO GET THE PROBLEM RESOLVED:

1) Post bond and request a court date.
2) Call CAT Scale Company direct 24 hours a day at 1-877-CAT-SCALE, ext. 7 (Toll Free) or visit www.catscaleguarantee.com for instructions.
3) **IMMEDIATELY** send a copy of the citation, CAT Scale Ticket, your name, company, address, and phone number to CAT Scale Company Attn: Guarantee Department.

* The four weights shown below are separate weights. The GROSS WEIGHT is the CERTIFIED WEIGHT and was weighed on a full length platform scale. All weights are guaranteed by CAT Scale.

WEIGH FASTER WITH OUR APP. FIND OUT MORE AT WEIGHMYTRUCK.COM

DATE:

[Depicts Trade Secret or Proprietary Data]

CL

DRIVER IN TRUCK UNLESS CHECKED HERE:

© CAT Scale® Reg 3063 11/17

Exhibit S-3.2

Bill of Lading #2

PUBLIC COPY

STRAIGHT BILL OF LADING (ORIGINAL NON NEGOTIABLE)

FXFE

BOL# 1707471

PRO# PRE-ASSIGNED BY CARRIER

* 4 7 4 3 8 8 3 9 8 1 *

FEDEX FREIGHT

▷ FREIGHT ECONOMY /
QUOTE 1949509487

[Depicts Trade Secret or Proprietary Data]

Notice: Freight moving under this Bill of Lading is subject to classifications and tariffs established by the carrier and are available to shipper upon request. This notice supersedes and negates any claimed oral or written contract, promise, representation, or understanding between parties, except to the extent of any written contract signed by both parties to the contract. Carrier certifies only ARB compliant equipment will be dispatched on California highways or railways. I hereby declare that the contents of this consignment are fully and accurately described above by proper shipping name and are classified, packed, marked and labeled, and are in all respects in proper condition for transport according to applicable international and national government regulations. Any unauthorized alteration or use of this Bill of Lading or the tendering of this shipment to any carrier other than that designated by company, may VOID company's obligations to make any payments relating to this shipment and VOID all rate quotes. All shippers, consignors, consignees, freight forwarders or freight brokers are jointly and severally liable for the freight charges relating to this shipment.

[Depicts Trade Secret or Proprietary Data]

TO

A-GAS AMERICAS
1100 HASKINS RD
Bowling Green OH 43402

[Depicts Trade Secret or Proprietary Data]

FedEx Freight

4743883981

[Depicts Trade Secret or Proprietary Data]

1 of 1 units

Exhibit S-3.3

ISO Placard

3082
9

Exhibit S-4

Sample Safety/Quality Check Forms

[Depicts Trade Secret or Proprietary Data]

[Depicts Trade Secret or Proprietary Data]

TANK ROUTING SHEET	Tank #		Batch #	Plas-
	Empty Wt LBS		Scale #	

PUBLIC COPY

[Depicts Trade Secret or Proprietary Data]

In-House Pre-Batch Mixing & Sampling Form

To determine purity, residue & moisture of batch.

[Depicts Trade Secret or Proprietary Data]

[Depicts Trade Secret or Proprietary Data]

Batch Mixing & Sampling Form

[Depicts Trade Secret or Proprietary Data]

A-GAS AMERICAS

ODS Sampling Certificate

AHRI 700 2006 Standards Using Gas Chromatography

[Depicts Trade Secret or Proprietary Data]

Certificate of Mixing and or Sampling to Determine Composition and Concentration of ODS by Third Party Contractor or A-Gas Americas

[Depicts Trade Secret or Proprietary Data]

[Depicts Trade Secret or Proprietary Data]

[Depicts Trade Secret or Proprietary Data]

[Depicts Trade Secret or Proprietary Data]

Destruction Verificationfor Carbon Material

[Depicts Trade Secret or Proprietary Data]

Shutdown & Re-Start up Approval

[Depicts Trade Secret or Proprietary Data]

[Depicts Trade Secret or Proprietary Data]

1100 Haskins Road, Bowling Green, OH 43402 419-867-8990

[Depicts Trade Secret or Proprietary Data]

[Depicts Trade Secret or Proprietary Data]

[Depicts Trade Secret or Proprietary Data]

Exhibit S-5

Elevation Map of Wood County, OH

Wood County, Ohio Elevation Map
Min. Elevation: 145 meters. (475 feet)
Max. Elevation: 299 meters. (980 feet)

Copyright 2011 ANYPLACEAMERICA.COM. All rights reserved.
This map may be freely downloaded and printed for non-commercial purposes. Please contact us before redistributing or republishing this map. Please do not alter or remove text or watermarks.
This map was created with Shuttle Radar Topography Mission data. Accuracy cannot be guaranteed.

145 175 206 237 268 299
Elevation in meters.
■=unknown elevation.

PUBLIC COPY

Exhibit S-6

Standard Operating Protocol - Laboratory Procedures-GC

Determination of New and Reclaimed Halon and Refrigerants by Gas Chromatography

Preparing Sample Bomb Vessel:

Before using one any of the GC units the sample being tested must be transferred into a specialized cylinder referred to as a "bomb" or placed into a syringe for any liquid samples. To load a bomb, first the lecture bottle and the bomb must be attached together and then hooked up to a vacuum pump making sure that the bomb and lecture bottle are laying down horizontal. Make sure that the valve is open to the connection to the vacuum pump as well as the valve on main sample chamber on the bomb and that the valve on the GC connection end is closed. Turn on vacuum pump and let pump for approximately 30 to 45 seconds. Close valves before turning off pump and disconnect form vacuum pump. Open lecture bottle end attached to the bomb and test that liquid is coming out of bomb by opening the valve that was connected to the vacuum pump[1]. Close valve on bomb and then close valve on lecture bottle. Quickly open and shut the main valve connection leading to the main sample chamber. Expel the rest of the remaining sample left from the connection of the lecture bottle and bomb and remove the two from each other. The sample is now ready to be hooked up to a GC for analysis.

For liquid samples, the sample must be placed into a clean beaker. Once the sample is in the beaker, take a clean, cold syringe from the refrigerator as a warm syringe will not collect any of the liquid sample. Take the cold syringe and rinse it out with some the sample, two or three times, to make sure that liquid is being drawn into the syringe and to insure no cross contamination. Once rinsing is done, draw out approximately 3 to 4 micrograms. The sample is now ready to be injected.

HP7890B and HP6890 GC Injection:

To begin find the correct GC unit that has the correct method for the sample that is being analyzed[2]. Before attaching the bomb to the GC, check to make sure that the line being used has been purged with helium. Hook up the bomb that is loaded with the sample to be analyzed to either the front or back line (which ever one has been purged) connected to the GC[3]. Once the bomb has been hooked up to the GC make sure the other line (especially if just used) has the

[1] If no liquid is coming out lift both bomb and lecture bottle vertical and test again if no liquid comes out the sample is either empty or vapor. If empty note on batch sheet and if a vapor directly hook up to GC and inject.
[2] Each GC has multiple methods on them that are no longer used. The correct method for each GC can be looked each gas.
[3] The HP7890B units have FIDs on the front and back while the HP6890 has a FID on the front and TCD on the rear line. Make sure that the proper detector is being used.

helium purge line attached and is turned on. Now proceed to the GC to type in the samples information and begin the analysis.

To enter in the samples information and begin the sample to be ran, first begin by selecting "Run Control" on the top of the screen. Then select "sample information" which will bring up a new screen. On this screen the samples information can be written in. by choosing the front or back tabs, depending on which line holds the sample, type in the batch number and tank number seen on the tag submitted on the lecture bottle. For the other line that has the helium purge line attached to write in "helium purge"[4]. If the information is correct, then click on "Run Method" to begin cool down of GC[5]. Once the GC has cooled down the Not Ready indicator on the GC will turn off. Go to the bomb and open the valve connected to the GC line and open. Once open check to make sure there is flow and that the sample has entered the GC. Press Start on the GC unit and wait until GC valves open and then close the bomb valve to the GC. Wait for GC to finish run[6].

HP7890A GCMS Injection:

To begin select the correct method by going to load method on the top left of the screen. Choose the method needed and then click on the icon with a green arrow. This will open the sample information as well as the data save location and file name. Do not change the file name or location path for any of the runs. The only changes made are the loading of method and sample information. Take the sample information found on the tag attached to the sample and press "start run". The bomb is then attached to the single line that splits into two connecting the GC and MS. Once the method is ready an icon will change saying that it is okay to start the run. Open the valve to the bomb leading into the GCMS line and press start on the GC. Close valve on bomb after the GC opens it valves letting sample in. Wait for GC to finish run.

HP5890 GC Injection:

To begin click on the icon in the control box. This will open a new screen where the method can be chosen, and the sample information can be entered. It is important to change the data path file name to the sample gas being ran. Once complete select ok and the method will load[7]. Same as before attach the bomb to the GC line and once the GC states that it is ready open the valve on the bomb and check for flow. Press start and close valve after injection. Wait for run to end.

[4] Please note that both lines can has two samples of same gas running at same time. The helium purge is meant to remove any impurities left over from a non passing sample or different gas other than the being ran.
[5] The HP7890B and HP7890A are both cryogenic units. Almost all methods ran on these units begin the method at a temperature of -20 degrees Celsius. The HP6890 begins at ambient temperature.
[6] Really just move on to the next sample or take care of the glassware or anything else that is not sitting around the entire time.
[7] Just like the HP6890, the HP5890 starts its run at ambient temperature it just runs through the method settings for the GC.

Liquid Sample Injection:

For liquid samples, a direct injection with a syringe is needed. This style of injection can be done on all instruments but is primarily performed on the HP6890 and HP5890 using the front line. The setup for the start of the run is same but no bomb is attached to the GC instead the injection port is used. Once the syringe is filled with sample, pierce the septum of the injector port and push down with the plunger. Remove syringe and press start. Wait for run to finish.

Data Analysis for HP7890B and HP6890:

After the run has been completed, the manual integration of peaks can begin. To get to the data first click on the bottom left screen icon "Data Analysis". This will open all data and will pull up the most recent file saved. Click on the correct file that needs to be analyzed and zoom in on the baseline. Click on the integrate button and integrate any unmarked peaks on the entire run[8]. Once finish un-zoom the run and go to file, print, and then "specify report and print". This give the chromatograph and percent report for the integrated peaks. Open the correct lab standard spreadsheet and enter in the integrated area values with the corresponding retention time[9]. If retention does not match up or there is no matching time in the standard spreadsheet the value is called an unknown and added at the end.

Data Analysis for HP7890A:

Once the run is complete the instrument will print out a chromatograph and percent report of any and all peaks already labeled. Open up the correct standard spreadsheet and match up retention times. If unsure about a peak, open the data file using the data analysis program and using the MS data right click on the peak to identify the peak in question[10]. Once peak has been identified if it is not in standard spreadsheet label at end and add all identified and unidentified peaks together for final result.

Data Analysis for HP5890:

Open the data analysis program and select the corresponding data file for the sample that is going to be analyzed. Manually integrate any and all peaks on the chromatograph as would be done on the HP7890 and HP6890. Once done zoom out and close the chromatograph file out. This will prompt the program to save the changes made to a new file location. Click yes and reopen the file with the same name but instead using .BND instead of .RAW. The .BND file will contain all changes made to the original chromatograph. Print it off and just like the others follow the same protocol of matching retention times and labeling any and all unknowns at the end.

[8] Correction of already integrated peaks is fine and recommended.
[9] Please note that the times may be off. Use of common sense is necessary for this part.
[10] Advanced knowledge of mass spectroscopy needed before using the instrument.

Exhibit S-7.1

250 lb Cylinder Schematic

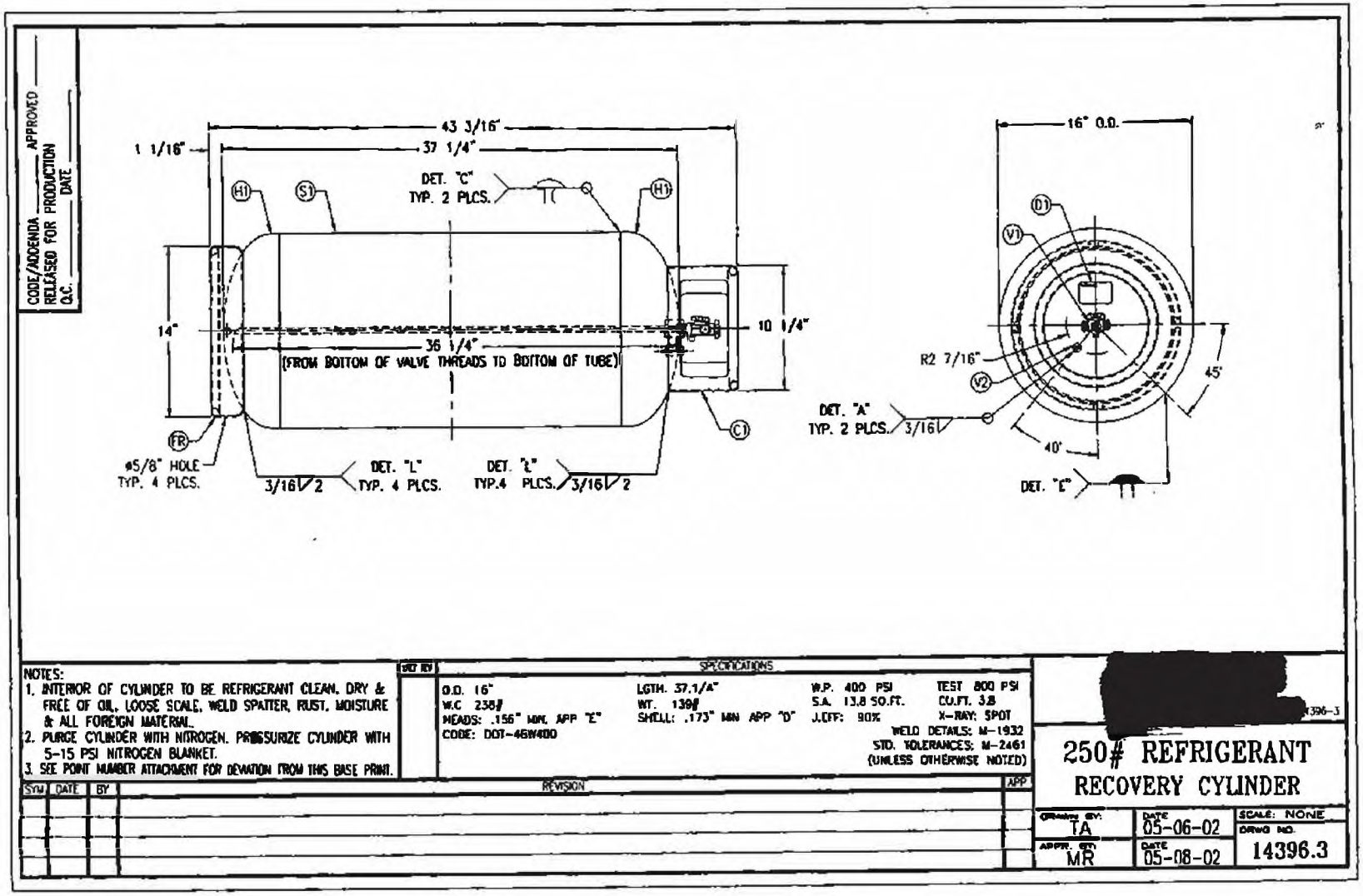
CODE/ADDENDA ____ APPROVED ____
RELEASED FOR PRODUCTION
Q.C. ____ DATE ____
43 3/16"
37 1/4"
1 1/16"
DET. "C"
TYP. 2 PLCS.
H1
S1
14"
36 1/4"
(FROM BOTTOM OF VALVE THREADS TO BOTTOM OF TUBE)
10 1/4"
FR
C1
ø5/8" HOLE
TYP. 4 PLCS.
3/16 2
DET. "L"
TYP. 4 PLCS.
DET. "L"
TYP.4 PLCS.
3/16 2
16" O.D.
D1
V1
R2 7/16"
V2
45°
DET. "A"
TYP. 2 PLCS.
3/16
40°
DET. "E"
NOTES:
1. INTERIOR OF CYLINDER TO BE REFRIGERANT CLEAN, DRY & FREE OF OIL, LOOSE SCALE, WELD SPATTER, RUST, MOISTURE & ALL FOREIGN MATERIAL.
2. PURGE CYLINDER WITH NITROGEN. PRESSURIZE CYLINDER WITH 5-15 PSI NITROGEN BLANKET.
3. SEE POINT NUMBER ATTACHMENT FOR DEVIATION FROM THIS BASE PRINT.
SPECIFICATIONS
O.D. 16"
W.C 238#
HEADS: .156" MIN. APP "E"
CODE: DOT-4BW400
LGTH. 37.1/4"
WT. 139#
SHELL: .173" MIN APP "D"
W.P. 400 PSI
S.A. 13.8 SQ.FT.
J.EFF: 90%
TEST 800 PSI
CU.FT. 3.8
X-RAY: SPOT
WELD DETAILS: M-1932
STD. TOLERANCES: M-2461
(UNLESS OTHERWISE NOTED)
SYM
DATE
BY
REVISION
APP
[redacted]
250# REFRIGERANT
RECOVERY CYLINDER
DRAWN BY: TA
DATE 05-06-02
SCALE: NONE
APPR. BY: MR
DATE 05-08-02
DRWG NO. 14396.3

Exhibit S-7.2

250 lb Cylinder Schematic #2

PUBLIC COPY

CODE DOT APPROVED MR
RELEASED FOR PRODUCTION
Q.C. DATE

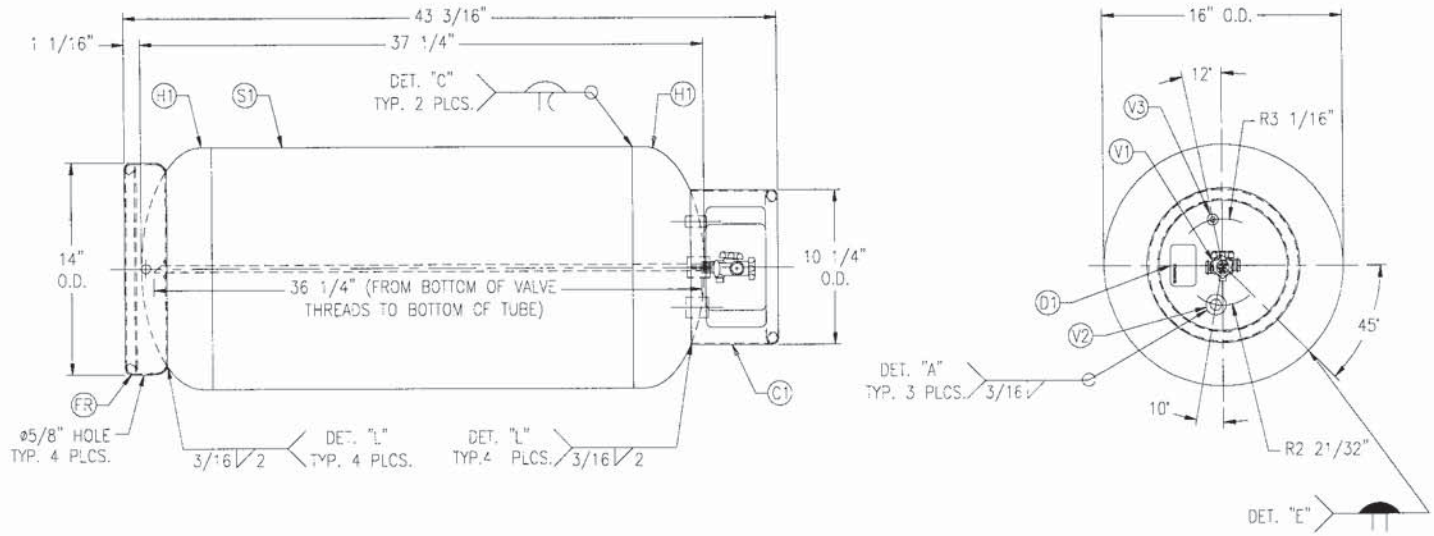

NOTES:
1. INTERIOR OF CYLINDER TO BE REFRIGERANT CLEAN, DRY & FREE OF OIL, LOOSE SCALE, WELD SPATTER, RUST, MOISTURE & ALL FOREIGN MATERIAL.
2. PURGE CYLINDER WITH NITROGEN. PRESSURIZE CYLINDER WITH 5-15 PSI NITROGEN BLANKET.

BLOCK REV

SPECIFICATIONS

O.D. 16"	HEAD (H1): .156" MIN. APP "F"	CODE: DOT-4BW400
LGTH. 37 1/4"	HEAD (H2): N/A MIN. APP "E"	CODE:
WT. 139#	SHELL (S1): .173" MIN. APP "D"	OTHER:
S.A. 13.8 SQ.FT.	W.P. 400 PSI	J.EFF: 90%
CU.FT. 3.6 W.C. 238#	TEST 800 PSI	X-RAY: SPOT
STD. TOLERANCES: M-246 (UNLESS OTHERWISE NOTED)		WELD DETAILS: M-1932

SYM	DATE	BY	REVISION	APP
A	11-04	LGB	ADDED V3, V2 ROTATED 118° CW, DET "A" WAS 2 PLCS	

MANCHESTER TANK

FILE LOCATION: \\CORP2\DWG\1900\14396-3

250# REFRIGERANT RECOVERY CYLINDER

DRAWN BY: TA	DATE: 05-06-02	SCALE: NONE
APPR. BY: VR	DATE: 05-06-02	DRWG NO. 14396.3

V1 = DUALPORT VALVE 600PSI CEODEUX 9225
V2 = 1/4" NPT WITH 600PSI RUPTURE DISC
V3 = 3/4" NPT WITH SQHD PLUG

Exhibit S-7.3

1,000 lb Cylinder Schematic

Attn: Dave Century Tool

CODE DOT APPROVED MR
RELEASED FOR PRODUCTION
Q.C. _____ DATE _____

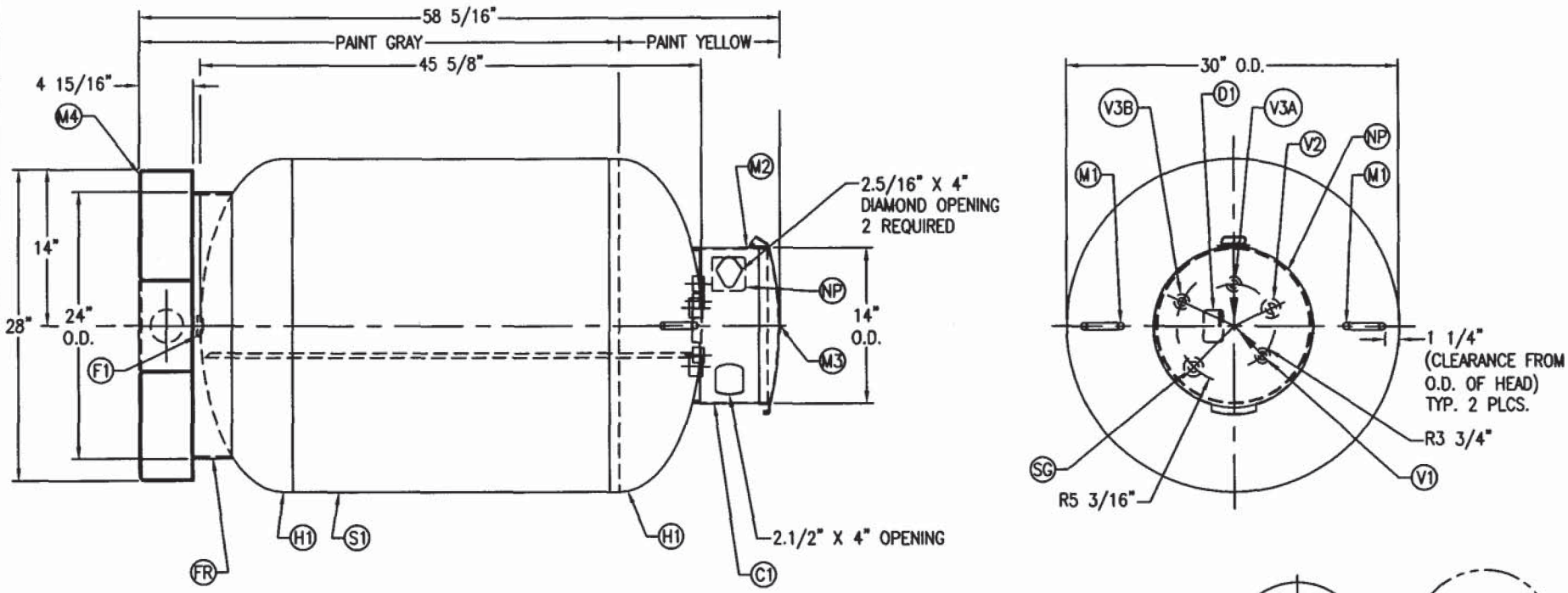

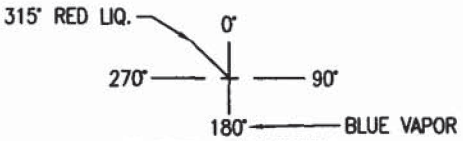

VALVE OPENINGS

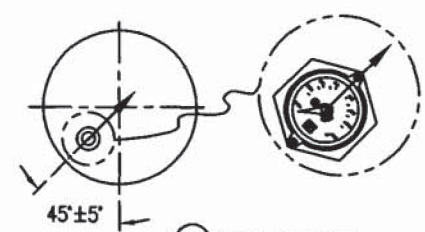

SG DIRECTION

NOTES:
1. INSIDE OF CYLINDER TO BE REFRIGERANT CLEAN, DRY & FREE OF RUST, SLAG & OTHER FOREIGN PARTICULATE MATTER.
2. INSTALL SIGHT GAUGE DIAL AS SHOWN.
3. PAINT ENTIRE CYLINDER WITH REFRIGERANT GRAY. THE TOP OF THE CYLINDER (DOWN TO THE KNUCKLE) IS TO BE PAINTED REFRIGERANT YELLOW.
4. SHIP WITH 15 PSI BLANKET OF ARGON.

BLOCK REV	SPECIFICATIONS		
	O.D. 30"	HEAD (H1):	CODE: DOT-4BW260
	LGTH. 45.5/8"	HEAD (H2):	CODE:
	WT. 349#	SHELL (S1):	OTHER:
	S.A.	W.P. 260 PSI	J.EFF:
	CU.FT. W.C. 1000#	TEST 520 PSI	X-RAY:
	STD. TOLERANCES: M-2461 (UNLESS OTHERWISE NOTED)		WELD DETAILS: M-1932

SYM	DATE	BY	REVISION	APP

MANCHESTER TANK

FILE LOCATION: \\CORP2\DWG\14674-3

1000# WC DOT REFRIGERANT RECOVERY CYLINDER W/ PALLET BASE

DRAWN BY:	DATE:	SCALE: NONE
APPR. BY:	DATE:	DRWG NO. 14674.3

PUBLIC COPY

[Depicts Trade Secret or Proprietary Data]

CODE DOT APPROVED MR
RELEASED FOR PRODUCTION
Q.C. _____ DATE _____

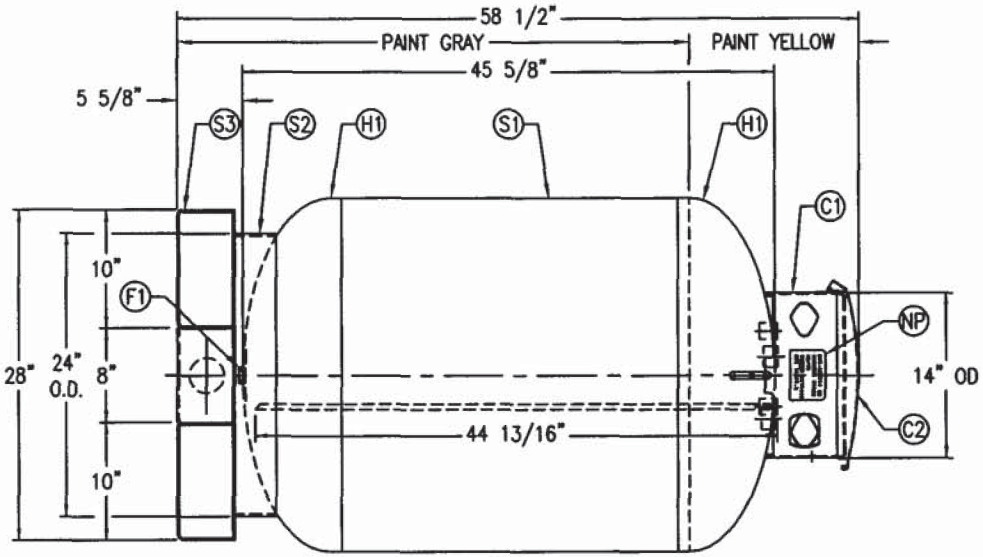

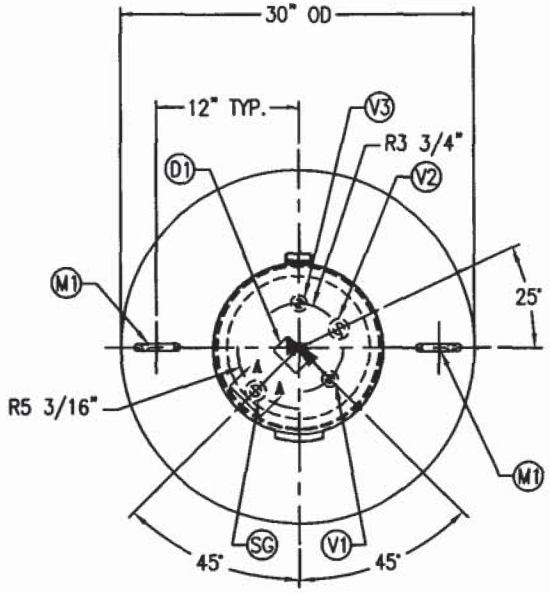

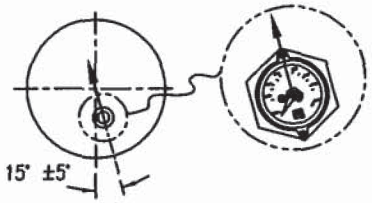

SG DIRECTION

NOTES:
1. INTERIOR OF CYLINDER TO BE CLEAN, DRY & FREE OF RUST, OIL, WATER, SLAG, SHOT & ALL FOREIGN PARTICULATE MATTER.
2. INSTALL SIGHT DIAL AS SHOWN ON DET A-A.
3. PURGE CYLINDER W/ ARGON. PERSSURIZED CYLINDER WITH 5-15 ARGON BLANKET.

BLOCK REV

SPECIFICATIONS

O.D. 30"	HEAD (H1):	CODE: DOT-4BW260
LGTH. 45.5/8"	HEAD (H2):	CODE:
WT. 354#	SHELL (S1):	OTHER:
S.A.	W.P. 260 PSI	J.EFF:
CU.FT. W.C. 1000#	TEST 520 PSI	X-RAY:
STD. TOLERANCES: M-2461 (UNLESS OTHERWISE NOTED)		WELD DETAILS: M-1932

SYM	DATE	BY	REVISION	APP

MANCHESTER TANK

FILE LOCATION: \\CORP2\DWG\14398-3

1000# WC
REFRIGERANT RECOVERY
DOT CYLINDER

DRAWN BY:	DATE:	SCALE: NONE
APPR. BY:	DATE:	DRWG NO. 14398.3

PUBLIC COPY

Exhibit S-7.4

Steel Drum Test Results

PUBLIC COPY

28092 28092

[Depicts Trade Secret or Proprietary Data]

Exhibit S-8.1

Containment Pallet #1

[Depicts Trade Secret or Proprietary Data]

Exhibit S-8.2

Containment Pallet #2

[Depicts Trade Secret or Proprietary Data]

Exhibit S-8.3

Containment Pallet Staging

[Depicts Trade Secret or Proprietary Data]

Exhibit S-9

24-Hour Surveillance Screen

[Depicts Trade Secret or Proprietary Data]

Exhibit S-10

Facility Fencing

[Depicts Trade Secret or Proprietary Data]

Exhibit S-11

"NOTICE NO TRESSPASSING" Sign

[Depicts Trade Secret or Proprietary Data]

Exhibit S-12

Sample Inspection Checklist/Report

SWPPP INSPECTION CHECKLIST

A-GAS AMERICAS

1100 HASKINS ROAD, BOWLING GREEN, OHIO 43402

[Depicts Trade Secret or Proprietary Data]

[Depicts Trade Secret or Proprietary Data]

[Depicts Trade Secret or Proprietary Data]

Exhibit S-13

Emergency Action Plan Evacuation Maps

[Depicts Trade Secret or Proprietary Data]

[Evacuation Map]

[Depicts Trade Secret or Proprietary Data]

[Evacuation Map]

[Depicts Trade Secret or Proprietary Data]

[Evacuation Map]

[Depicts Trade Secret or Proprietary Data]

[Evacuation Map]

WA

EX

[Depicts Trade Secret or Proprietary Data]

[Evacuation Map]

[Depicts Trade Secret or Proprietary Data]

[Evacuation Map]

[Depicts Trade Secret or Proprietary Data]

[Evacuation Map]

[Depicts Trade Secret or Proprietary Data]

[Evacuation Map]

[Depicts Trade Secret or Proprietary Data]

[Evacuation Map]

[Depicts Trade Secret or Proprietary Data]

[Evacuation Map]

[Depicts Trade Secret or Proprietary Data]

[Evacuation Map]

[Depicts Trade Secret or Proprietary Data]

[Evacuation Map]

[Depicts Trade Secret or Proprietary Data]

[Evacuation Map]

[Depicts Trade Secret or Proprietary Data]

[Evacuation Map]

[Depicts Trade Secret or Proprietary Data]

[Evacuation Map]

[Depicts Trade Secret or Proprietary Data]

[Evacuation Map]

[Depicts Trade Secret or Proprietary Data]

[Evacuation Map]

[Depicts Trade Secret or Proprietary Data]

[Evacuation Map]

[Depicts Trade Secret or Proprietary Data]

[Evacuation Map]

[Depicts Trade Secret or Proprietary Data]

[Evacuation Map]

[Depicts Trade Secret or Proprietary Data]

[Evacuation Map]

[Depicts Trade Secret or Proprietary Data]

[Evacuation Map]

[Depicts Trade Secret or Proprietary Data]

[Evacuation Map]

[Depicts Trade Secret or Proprietary Data]

[Evacuation Map]

[Depicts Trade Secret or Proprietary Data]

[Evacuation Map]

[Depicts Trade Secret or Proprietary Data]

[Evacuation Map]

[Depicts Trade Secret or Proprietary Data]

[Evacuation Map]

[Depicts Trade Secret or Proprietary Data]

[Evacuation Map]

[Depicts Trade Secret or Proprietary Data]

[Evacuation Map]

[Depicts Trade Secret or Proprietary Data]

[Evacuation Map]

[Depicts Trade Secret or Proprietary Data]

[Evacuation Map]

[Depicts Trade Secret or Proprietary Data]

[Evacuation Map]

[Depicts Trade Secret or Proprietary Data]

[Evacuation Map]

[Depicts Trade Secret or Proprietary Data]

[Evacuation Map]

[Depicts Trade Secret or Proprietary Data]

[Evacuation Map]

[Depicts Trade Secret or Proprietary Data]

[Evacuation Map]

[Depicts Trade Secret or Proprietary Data]

[Evacuation Map]

[Depicts Trade Secret or Proprietary Data]

[Evacuation Map]

[Depicts Trade Secret or Proprietary Data]

[Evacuation Map]

[Depicts Trade Secret or Proprietary Data]

[Evacuation Map]

[Depicts Trade Secret or Proprietary Data]

[Evacuation Map]

[Depicts Trade Secret or Proprietary Data]

[Evacuation Map]

[Depicts Trade Secret or Proprietary Data]

[Evacuation Map]

[Depicts Trade Secret or Proprietary Data]

[Evacuation Map]

[Depicts Trade Secret or Proprietary Data]

[Evacuation Map]

[Depicts Trade Secret or Proprietary Data]

[Evacuation Map]

[Depicts Trade Secret or Proprietary Data]

[Evacuation Map]

[Depicts Trade Secret or Proprietary Data]

[Evacuation Map]

[Depicts Trade Secret or Proprietary Data]

[Evacuation Map]

A-GAS®
TOGETHER WE CAN

PUBLIC COPY

A-Gas
1100 Haskins Road
Bowling Green, Ohio 43402
USA

T [+1] 419-867-8990
E info.oh@agas.com

BUSINESS CONFIDENTIAL INFORMATION

March 19, 2018
VIA FEDEX
Craig W. Butler, Director
Ohio Environmental Protection Agency
Attn: Mitch Mathews
P.O. Box 1049
50 West Town Street, Suite 700
Columbus, OH 43216-1049

Re: Reclaimed Refrigerant Destruction – Waiver Request Section 3734.02(G)
A-Gas Americas Refrigerant Reclamation Facility
1100 Haskins Rd, Bowling Green, Ohio 43402

Dear Director Butler:

A-Gas US, Inc., d/b/a A-Gas Americas ("***A-Gas***" or "***the Company***") on behalf of its subsidiary Reclamation Technologies, Inc., respectfully requests a waiver pursuant to Ohio Code § 3734.02(G) from solid waste permitting requirements that may apply to handling and destruction of halocarbon refrigerants using advanced plasma arc destruction at our Bowling Green refrigerant reclamation facility.

The A-Gas Americas group of companies, headquartered in Bowling Green, Ohio, has been a leader in the refrigerant reclamation business since 1986.[1] As an EPA-certified refrigerant recycler, A-Gas reclaims used refrigerants from cooling systems at various commercial, industrial and automotive sources, (such as big box stores, office buildings, airports, manufacturing facilities, and hospitals) which are brought to its reclamation facilities in Bowling Green, Texas and Arizona for reclamation. At the Bowling Green facility, A-Gas has two state-of-the-art Plascon® plasma arc destruction units which are capable of destroying older, environmentally damaging halocarbon materials using pyrolysis to achieve a 99.9999% destruction efficiency.[2] While halocarbons are safe and chemically inert from a human health perspective,

[1] A-Gas Americas includes Reclamation Technologies, Inc. ("RemTec"), A-Gas Performance Chemicals, Inc., Coolgas, Inc. ("Coolgas") and Raprec Refrigerants, Inc. ("Raprec").

[2] Halocarbons are a class of useful chemicals which includes chlorofluorocarbons (referred to as "CFCs") that are commonly used in refrigeration systems, fire extinguishers, and foam blowing.

manufacturing of "virgin" halocarbons has been phased out because these chemicals deplete the stratospheric ozone layer, and in addition, are strong greenhouse gases. Some types of older halocarbon refrigerants (such as [redacted]) were originally made from materials regulated under subpart C of the federal Resource Conservation and Recovery Act ("**RCRA**") and may contain trace manufacturing residuals that would be RCRA-regulated if chemically separated from the refrigerant. These refrigerants are equally as stable and safe from a public health standpoint as any other halocarbons, and can be destroyed in the plasma units equally as effectively as other halocarbons. A-Gas Americas does not believe that these refrigerants are technically regulated under federal or state solid waste laws; however, out of an abundance of caution A-Gas is requesting a Section 3734.02(G) waiver in order to provide certainty to our ability to invest and expand our refrigerant reclamation business in Ohio.

In light of the environmental benefits to the ozone layer and climate that result from permanently removing older CFC refrigerants from circulation through destruction (rather then recycling), and because plasma destruction offers the same safety level as reclaiming and reselling refrigerants (a practice which is encouraged under USEPA regulations and is entirely legal), Ohio EPA has the authority to grant a waiver under Section 3734.02(G). The following provides additional information about the A-Gas reclamation process and plasma destruction units to support this exemption request.

I. ENVIRONMENTAL BENEFITS OF REFRIGERANT DESTRUCTION

Although halocarbons are safe, chemically stable and non-toxic in normal use as refrigerants, fire suppressants or propellants in medical devices, since the early 1990s the international Montreal Protocol and federal EPA have mandated the phase-out of older halocarbons because of their adverse effect on the stratospheric ozone hole and global warming once they reach the upper atmosphere.[3] A fact of life is that these "miracle" halocarbon materials are ubiquitous in the American economy, and unless removed from circulation and destroyed, they will over time leak from refrigeration equipment through compressor seals, valves and piping, particularly from older equipment. In normal use, refrigerants in cooling systems also pick up oil and water over time and must be periodically replaced. A-Gas specializes in reclaiming and reconditioning these refrigerants by removing halocarbons "in the field" from refrigeration systems at a wide variety of end users, such as commercial office buildings, airports, residential homes, shopping malls, sports arenas, government buildings, apartment buildings, and factories.

A. Reclamation of Used Refrigerants

[3] For a short history of refrigerants and other halocarbons which were considered "miracle" chemicals until the ozone depleting phenomenon was understood, see https://www.washingtonpost.com/archive/politics/1988/04/10/cfcs-rise-and-fall-of-chemical-miracle/9dc7f67b-8ba9-4e11-b247-a36337d5a87b/?utm_term=.e45284912995 (noting that "the very stability that prevents toxicity in CFCs assures that the chemicals will rise to the stratosphere").

Used refrigerants in residential, commercial and industrial cooling systems can be safely extracted using sealed pumping equipment into pressurized containers. A-Gas Americas then transports the recovered refrigerants to its Bowling Green facility (or other facilities in Arizona and Texas) where the gas is reconditioned by removing oil, water and other contaminants through a filtration process to 99.5% purity specifications. There is a viable market for reclaimed refrigerants, and the federal government encourages refrigerant recycling because it avoids the need for manufacturing new "virgin" materials.

Because of the fact that halocarbons are chemically stable, historically they had been difficult to destroy, and only recently has plasma arc technology been perfected to provide an efficient means of reliably destroying these inert materials. Although used halocarbons are valuable and often reclaimed and resold as recycled refrigerant, scientists agree that plasma destruction is preferable from an environmental standpoint compared to recycling these materials because refrigerants that are placed back into end user equipment (such as office buildings) will eventually leak over time to the atmosphere. Accordingly it is better to destroy the older CFC halocarbons and allow the refrigerant market to transition to substitute refrigerants that are less damaging to the ozone hole and climate. In short, now that plasma destruction technology is available, it is environmentally preferable to destroy older halocarbons where is it economical to do so.

As noted, although normal refrigeration equipment leaks pose no health and safety concern because of the inert qualities of halocarbons, those amounts of older halocarbon refrigerants that are released into the atmosphere do contribute to stratospheric ozone destruction and global warming. Accordingly, the federal USEPA anticipated that destruction technologies would be developed which would allow older refrigerants to be destroyed, thus accelerating the transition to substitutes.[4] In addition, the State of California offers "carbon credits" under its climate change cap-and-trade program for older halocarbons anywhere in the United States that are reclaimed and destroyed rather than recycled, which provides an economic driver to destroy rather than recycle older refrigerants. There are three end uses that A-Gas may apply to reclaimed CFC refrigerants depending on customer demand and market forces: (1) processing the material for purposes of re-selling into the reclaimed refrigerant market; (2) destroying the material for a fee in its Plascon plasma arc units to 99.9999% destruction efficiency; or (3) destroying the material in the Plascon plasma arc units for purposes of creating carbon credits, which can be sold into the voluntary or compliance carbon market in the United States.

This application for exemption concerns in particular the destruction of the older refrigerant [redacted], a first generation halocarbon which inherently can contain manufacturing residuals [redacted] Using precision laboratory testing, [redacted]

[4] *See* 56 Fed. Reg. at 5913 n.9 ("Since these chemicals are difficult to destroy, it is likely that they will be eventually released although at a later point in time. The Agency is assessing the possibility that such chemicals could either be destroyed or transformed into other chemicals at a later date, thus diminishing their eventual impact on the ozone layer").

[redacted] can be found in residual quantities in [redacted] which are minute, but yet sometimes above the thresholds in the table at 40 C.F.R. Part 261.24 (OAC Rule 3745-51-24). However, [redacted] should be considered exempt from RCRA when destroyed as a used refrigerant or as carbon credits by virtue of the RCRA refrigerant recycling exemption under 40 C.F.R. Part 261.4(b)(12).[5] Moreover, [redacted] arguably does not technically meet the definition of a RCRA waste[6] or a solid waste.[7] Consistent with this reality, USEPA has suspended its RCRA testing regulations as applied to used refrigerants because of the possibility of false positives.[8] In short, there is no reason that [redacted] or other reclaimed halocarbons should be considered subject to the RCRA program. However, although A-Gas Americas has sought clarification on this interpretation from the federal USEPA, we have not yet received a definitive response and therefore

---

[5] A-Gas Americas believes that refrigerant destruction is exempted from federal and state hazardous waste laws by virtue of the "reclaim" exemption under 40 C.F.R. § 261.4(b)(12) as well as the substantially identical exemption under Ohio state law in Ohio Code 3745-51-04, which read as follows:

> 40 C.F.R. § 261.4, Exclusions: *** (b) § 261.4(b) Solid wastes which are not hazardous wastes. The following solid wastes are not hazardous wastes: *** (12) Used chlorofluorocarbon refrigerants from totally enclosed heat transfer equipment, including mobile air conditioning systems, mobile refrigeration, and commercial and industrial air conditioning and refrigeration systems that use chlorofluorocarbons as the heat transfer fluid in a refrigeration cycle, provided the refrigerant is reclaimed for further use.
>
> Ohio Code 3745-51-04 Exclusions: *** (B) Wastes which are not hazardous wastes. *** The following wastes are not hazardous wastes: *** (12) Used chlorofluorocarbon refrigerants from totally enclosed heat transfer equipment, including mobile air conditioning systems, mobile refrigeration, and commercial and industrial air conditioning and refrigeration systems that use chlorofluorocarbons as the heat transfer fluid in a refrigeration cycle, provided the refrigerant is reclaimed for further use.

See also 56 Fed. Reg. 5910 (Feb. 13, 1991) (original Federal Register notice establishing exemption to promote recycling of CFC refrigerants); 40 C.F.R. 262.11 (generator may determine if waste is excluded, listed or characteristic based on knowledge of material); OAC Rule 3745-52-11.

[6] These manufacturing residuals are not "contaminants" within the meaning of Part 261.24 Table 1 because they do not contaminate the [redacted], but rather are inherent feedstock residuals or co-products of the manufacturing process. In fact, from a materials science standpoint, the material is entirely [redacted] and any residual [redacted] and [redacted] do not exist in the material independently.

[7] Under 40 C.F.R. § 261.2(a)(1), a material is a solid waste only if it is "discarded", which means (in relevant part) it is abandoned or recycled. Part 261.2(b) defines the term "abandoned" as disposed of or incinerated. Refrigerants destroyed in plasma units are not disposed of, rather dissociated into constituent molecular components in order to neutralize the ozone-depleting and greenhouse gas physical properties.

[8] 56 Fed. Reg. at 5910 ("the Agency is promulgating today's interim final rule to suspend the TC rule for used refrigerants which exhibit the toxicity characteristic and which are recycled.").

we are seeking a Section 3734.02(G) exemption to provide certainty for our continued investment and expansion in Ohio.

There is every policy reason to grant an exemption to promote A-Gas America's operations at the Bowling Green facility. Destruction of first generation CFCs is a key priority of USEPA's climate and ozone policy goals which promote early retirement of used CFCs from older, leaky cooling systems and the transition to ozone-friendly and climate-friendly substitute refrigerants. In fact, when the Montreal Protocol was first implemented in the federal Clean Air Act some 25 years ago, USEPA recognized that refrigerants should be exempted from RCRA because they were non-toxic and promoting refrigerant reclamation was environmentally beneficial.[9] EPA also recognized at that time that eventually technologies would be developed to destroy halocarbons, which would be preferable even to recycling.[10] We have now arrived in the 21st century where plasma destruction technology is feasible.

B. Environmental Benefits of Refrigerant Recycling and Destruction

There are multiple health and environmental benefits from permanently destroying existing CFC halocarbons, and these benefits by comparison are even greater than the benefits of refrigerant recycling. As noted, manufacturing of outdated CFC halocarbons has been phased out under the Montreal Protocol but large amounts of these refrigerants (banks) still exist in older cooling systems today. For example, [redacted] was a widely used cooling fluid in older refrigeration systems. [redacted] has an ozone depletion potential (ODP) of 1.0 – the highest among chlorofluorocarbons. [redacted] is also a powerful greenhouse gas with a global warming potential (GWP) 4,750 times greater than CO2. An estimated [redacted] million tons of banked [redacted] exists for destruction or reclamation.[11] The opportunity to destroy this amount of [redacted] represents 7.98 billion tCO2e or taking over one billion cars off the road for a year.
Although recycling used refrigerants for resale to the refrigerant market is also environmentally beneficial, the benefits of recycling are from displacing manufacture of virgin refrigerants and supporting an orderly transition to next generation refrigerant substitutes. But the reality is that recycled refrigerants do eventually leak into the atmosphere from refrigeration systems in the field, such that destruction of these chemicals is highly preferable to recycling from the perspective of the goals of the Montreal Protocol and greenhouse gas reduction initiatives. The use of advanced destruction technologies, such as plasma

---

[9] *See* 54 Fed. Reg. at 31336 ("CFC refrigerants are not likely to exhibit a characteristic of a hazardous waste").

[10] *See* 56 Fed. Reg. 5910, 5913 n.9 (Feb. 13, 1991) ("Since these chemicals are difficult to destroy, it is likely that they will be eventually released although at a later point in time. The Agency is assessing the possibility that such chemicals could either be destroyed or transformed into other chemicals at a later date, thus diminishing their eventual impact on the ozone layer") (original Federal Register notice establishing exemption to promote recycling of CFC refrigerants).

[11] *See* IPCC/TEAP Special Report: Safeguarding the Ozone Layer and the Global Climate System, Intergovernmental Panel on Climate Change, 166 (Feb 5, 2003), available at https://www.ipcc.ch/report/sroc/.

dissociation used by A-Gas, to accelerate the removal of these high-ozone depleting and high-global warming chemicals from the market unquestionably benefits public health and the environment. In contrast, if reclaimed CFCs are subject to RCRA permitting, materials recovered from the field would have to be first transported to A-Gas facilities for reclamation (*i.e.*, removal of oil and water) and then transported again to an off-site RCRA-permitted incinerator and managed under RCRA. It makes no regulatory sense to ship safe, non-toxic halocarbons cross-country to old, dirty thermal waste incinerators, and adds significant cost, red-tape, and transportation impacts which thwart environmental goals. Deterring destruction by increasing cost and regulatory burdens will often result in the refrigerant being resold rather than destroyed, a option which is entirely legal, but which results in the refrigerant eventually leaking into the atmosphere.

The Plascon plasma destruction units used by A-Gas at Bowling Green are the most efficient destruction technology available today, with 99.9999% efficiency. As discussed below in Part III, the outputs of plasma destruction of CFCs are negligible amounts of CO2 and saline water. Thus, plasma destruction is highly preferable to thermal incineration, which is less efficient and involves commingling with hazardous waste streams. And, as noted, any form of destruction is preferable to reusing halocarbons as refrigerant.

II. CONSISTENCY WITH OHIO SOLID WASTE REGULATIONS

The Director may grant an exemption to a reclamation facility under Ohio Code § 3734.02(G) provided the activities "are unlikely to adversely affect the public health or safety or the environment."[12] Because plasma destruction of halocarbons is actually more protective of health and the environment than any other recycling or treatment alternative, granting an exemption for the Bowling Green facility will benefit health and the environment.

---

[12] *See* Ohio Admin. Code Rule 3745-50-31 ("Exemptions. (A) The director, by order, may exempt any person generating, collecting, storing, treating, disposing of, or transporting hazardous wastes in such quantities or under such circumstances that, in the determination of the director, are unlikely to adversely affect the public health or safety or the environment from any requirement to obtain a hazardous waste facility installation and operation permit or comply with the manifest system or other requirements of Chapter 3734. of the Revised Code and rules adopted thereunder. Such an exemption shall be consistent with and equivalent to any regulations adopted by the administrator under the Resource Conservation and Recovery Act of 1976, 90 Stat. 2806, 42 U.S.C.A. 6921 except as otherwise provided in Chapter 3734. of the Revised Code."); *accord* Ohio Rev. Code § 3734.02(G) ("The director, by order, may exempt any person generating, collecting, storing, treating, disposing of, or transporting solid wastes, infectious wastes, or hazardous waste, or processing solid wastes that consist of scrap tires, in such quantities or under such circumstances that, in the determination of the director, are unlikely to adversely affect the public health or safety or the environment from any requirement to obtain a registration certificate, permit, or license or comply with the manifest system or other requirements of this chapter. Such an exemption shall be consistent with and equivalent to any regulations adopted by the administrator of the United States environmental protection agency under the 'Resource Conservation and Recovery Act of 1976,' 90 Stat. 2806, 42 U.S.C.A. 6921, as amended, except as otherwise provided in this chapter.").

A. Halocarbon Refrigerants Are Safe and Non-Toxic Inert Gases

As noted, USEPA determined in the early 1990s that refrigerants were non-toxic and exempted from the RCRA program. Companies in the refrigerant recycling sector have relied on USEPA's definitive statements about the non-hazardous character of recycled refrigerants for some twenty five years, and USEPA has never indicated that this reliance is unreasonable or unlawful. It is also common industry knowledge that halocarbons removed from refrigeration equipment are not hazardous in practice, and there is no indication in regulatory publications or scientific literature that halocarbons would be considered toxic under normal conditions when reclaimed for recycling or destruction. Halocarbons are generally considered non-toxic and we are not aware of any documented cases of human health or environmental injury from halocarbon releases.

In fact, there is only once documented incident of environmental contamination from a refrigerant spill, but even that incident did not result in any health or environmental effects (and had nothing to do with trace [redacted] constituents in the refrigerant). In 1995 and 1999, spills of liquid [redacted] at a Hudson Technologies CFC recycling facility contaminated public water-supply wells in Hillburn, N.Y. However, despite detecting significant amounts of [redacted] in groundwater, the State of New York concluded that the spill did not pose a health concern and therefore did not list the Hillburn site under the state superfund program. Similarly, the federal Agency for Toxic Substances and Disease Registry (ATSDR) conducted a public health assessment, and did not find any toxic or hazardous impact even though contamination levels were above drinking water standards.[13] In fact, the ATSDR report concluded that: "New York State Department of Health (NYS DOH) and Agency for Toxic Substances and Disease Registry (ATSDR) have no information that indicates people have been exposed to site-related contaminants at levels that may cause adverse health effects. Therefore, based upon ATSDR's public health hazard category classification (see Appendix D), the HTI site poses no apparent public health hazard based on current and past exposures."[14] The ATSDR report also noted that "[t]he nature of the contaminant of concern at the site did not meet the state definition of a hazardous waste, as defined in Part 371 of the State environmental regulations."[15] Thus the Hillburn incident supports, rather than undermines, the conclusion that halocarbon refrigerants (and in particular [redacted]) are for practical purposes non-hazardous and non-toxic. Notably, the [redacted] stored at the Hillburn facility was likely not subject to RCRA permitting because the facility in question was a refrigerant reclamation facility and had no destruction facilities. Unlike the Hillburn facility, which apparently stored materials outside, all reclaimed materials at Bowling Green are stored in a modern warehouse building such that any leak of halocarbons would quickly evaporate (inertly) into the atmosphere and would have no opportunity to reach soil or groundwater.

---

[13] Agency for Toxic Substances and Disease Registry (ATSDR), *Public Health Assessment for Hudson Technologies, Inc., Hillburn, Rockland County, New York, EPA Facility ID: NY0001392463* (Sept. 30, 2006), available at https://www.atsdr.cdc.gov/HAC/pha/HudsonTechnologiesInc/HudsonTechnologiesPHA09.30.06.pdf.

[14] ATSDR, Public Health Assessment for Hudson Technologies, Inc. at 2.

[15] ATSDR, Public Health Assessment for Hudson Technologies, Inc. at 1.

B. Destruction of Refrigerants Is Equivalent to Recycling

A Section 3734.02(G) exemption is appropriate for the A-Gas Americas Bowling Green facility because sending reclaimed refrigerants to plasma arc destruction is equally (or more) safe as recycling and resale of those refrigerants. As noted, recycling and resale of refrigerant halocarbons is an activity that is unquestionably exempted from RCRA under federal and state law. As described in Part III, regardless whether the material is destined to be resold or destroyed, it goes through the same reclamation process. When reclaimed refrigerants are received at the Bowling Green facility, they go through a distillation process that removes water and oil that was picked up by the refrigerant while being used at the end-user facility (*i.e.*, the supermarket, office building, etc.). The reclamation process is necessary because the recycled refrigerant market requires 99.5% purity in order to sell reclaimed refrigerants and similarly, the plasma destruction units require removal of oil and water in order to function efficiently.

The only difference in terms of materials management between refrigerants bound for resale and refrigerants to be destroyed is the staging of those materials after reclamation. Material that will be resold is packaged into various sizes of DOT-approved cylinders or ISO tanks, properly labeled, and shipped from A-Gas Americas facilities to customers around the United States. By comparison, material designated for destruction remains within the Bowling Green facility, and is simply moved from the reclamation area in the south building to the dedicated plasma unit area in the north building where they are staged in a secure area. The containers are then connected to the plasma unit with the same sealed steel piping that is used in the reclamation process and fed into the plasma unit using an electronic metering system.

As noted, the Plascon plasma units (PDUs) at the Bowling Green facility achieve a 99.9999% destruction efficiency.[16] The PDUs operated at Bowling Green were purchased in 2009 and 2015 and are operated with destruction rates up to 60 k[redacted] The outputs of plasma destruction of halocarbons are primarily negligible amounts of CO2 and saline water. The facility's construction permit requires monitoring of parameters such as CO which are indicators of efficient operation.[17] Because of the ultra-high efficiency of plasma technology, air emissions associated with the trace constituents of [redacted] that are typically found in [redacted] would be less than 40 *milligrams* per year if destroyed in the A-Gas plasma units. The Plascon unit produces a saline effluent of total dissolved solids, total suspended

[16] http://www.plascon.com.au/technology-overview.html

[17] *See* Letter from M. Armstrong (A-Gas Americas) to M. Budge (OEPA), dated Mar. 6, 2018 regarding *de minimis* air emissions from PDUs (Appx. A).

solids, fluoride, sodium, bromides, bromine and chloride that is permitted under conventional POTW regulations.[18]

Importantly, plasma destruction technology is not incineration and is superior to older thermal incinerators that have been used in the past to destroy CFC refrigerants. The Plascon units use an "in-flight" argon plasma process which mixes the halocarbon material directly with the argon plasma. This technology was developed in Australia and has been operating commercially since 1996 with destruction efficiencies of up to 99.9999%. Reclaimed halocarbons (primarily CFCs) are rapidly heated to 3000°C where pyrolysis occurs. The process is followed by rapid alkaline quenching that prevents the formation of dioxins and furans. Neutralization of acids byproducts is accomplished with alkaline liquor resulting in halide salt solutions consisting of NaCl and NaF which are buffered and discharged to the local wastewater treatment facility. The only byproduct gases, typically argon, carbon dioxide and traces of carbon monoxide, are vented to the atmosphere. In comparison with incineration processes, the off-gas volumes from PLASCON® are extremely low, as are residual ground level concentrations. Importantly, the Plascon technology is not incineration; rather it is pyrolysis, a thermo-chemical decomposition of organic material at elevated temperatures in the absence of oxygen (or near absence), which involves the simultaneous change of chemical composition and physical phase, and is irreversible.[19]

Accordingly, using plasma destruction technology as an alternative to refrigerant recycling is effectively identical from a safety and environmental standpoint to the existing reclamation activities which are already legally authorized without a RCRA facility permit, but with PDU destruction adding the environmental benefit of more quickly reducing ozone depletion and global warming.

III. TECHNICAL CONSIDERATIONS AND EXEMPTION CONDITIONS

The following provides additional technical information relating to the operation of plasma destruction units at the Bowling Green facility for purposes of the Director's evaluation of this application.

A. Description of Materials Management

---

[18] *See* City of Bowling Green Industrial User Permit, amended Jan. 8, 2016 (Appx. B); Letter from P. Tebbe (OEPA Division of Surface Water) to D. Stockburger (City of Bowling Green), dated June 9, 2005 (no indirect discharge permit required) (Appx. C); Letter from J. Susor (City of Bowling Green) to T. Kearney (Remtec Environmental Group), dated June 15, 2005 ("Ohio EPA has evaluated and approved RemTec's proposed discharge and is not requiring an indirect discharge permit") (Appx. D).

[19] *See* SRL Plasma Pty, Ltd., Plasma Technical Overview (Appx. E); Salience Solutions, Pyroplas Unit Torch and Spray Scrubber Diagram, dated Sept. 7, 2015 (Appx. F); J. Yasi, Plasma Arc Destruction vs. Incineration, dated Dec. 11, 2017 (Appx. G).

Overview. Used halocarbon refrigerants are purchased from end-use customers (such as office buildings, airports, supermarkets) in the field that have refrigerant equipment by A-Gas Americas through a network of refrigerant reclaimers and shipped to the Bowling Green facility. Documentation includes buyback agreements, point-of-origin documentation, and purchase orders. The documentation provides the U.S. EPA Part 608 certification number of the technician that recovered the material in accordance with federal refrigerant reclamation regulations. The halocarbons are then transported on a U.S. DOT bill of lading to the Bowling Green facility.

All incoming halocarbons are tracked using an inventory system known as the Tank Database (TDB). This system records the date the halocarbons arrive at the facility, customer arrived from, purchase order number, serial number of the cylinders that halocarbons are in, the gross weight of the cylinders, the stamped tare weights, and the estimated weights of the halocarbon contents based on the gross weight and stamped tare. At this point, A-Gas adds its internal tracking system by assigning each cylinder a sequential tracking number (e.g., PO#-1, PO#-2, PO#-3, and so on). These tracking numbers are correlated to the serial numbers of each cylinder as well.

The halocarbons, in most cases, arrive in steel cylinders that range from 30-lb cylinders up to 1-ton tanks. These cylinders/tanks are typically steel with secure valves. When drums are received with lower pressure halocarbons such as R-113 and [redacted], the drums are placed on specialty plastic pallets with a closed bottom (secondary containment pallets), which assures that if the drums happen to leak then the halocarbon would be contained in the bottom and prevent spillage. The halocarbons that are brought to the Bowling Green facility are stored in a 12,000-square foot bonded warehouse, which is equipped with secondary containment, prior to being tested and batched.

Upon being checked into the TDB tracking system, halocarbons are then tested in the Bowling Green facility's on-site AHRI certified laboratory. The cylinders are tested individually as a quality check. The testing of individual cylinders leads to batching of the materials. Batching is done at the Bowling Green facility with halocarbons that are the same, for example R-12 batched with R-12, R-113 batched with R-113. Batches can range from 3,000 pounds up to 30,000 pounds. Smaller batches (under 9,000 pounds) are batched together as soon as there is enough weight to be put together for a viable project. All testing and transfers of halocarbon materials are done through sealed values, closed loop piping, and specialized reclamation equipment such that no material is lost or exposed to the environment.

After the testing and batching of the material, because oils and moisture are often picked up by used refrigerants from compressors in field refrigeration equipment, any residual oils or water condensate in the refrigerant is filtered out using a process that is called the reboiler. This process is done by pushing the halocarbon batch through the reboiler to remove oil residues then through a Super Drier (SD) to remove moisture. Oil residues from the reboiler are drummed and disposed of at [redacted]

[redacted]

After filtration, halocarbons destined for plasma destruction are transferred through closed system piping to batch tanks associated with the PDUs. Any remaining residues in the halocarbons are separated into a "drop tank" while the halocarbon batch is being vaporized prior to going through the plasma torch. Each step of the filtration and PDU destruction process is documented, and for halocarbons that are destroyed for carbon credits, the process is audited by third-party verification bodies. The process for reclamation, filtration and destruction is substantially the same for all halocarbons, regardless of whether the halocarbons contain RCRA residuals or not.

Method of storage. Halocarbon materials (refrigerants, fire suppressants, etc.) are recovered from household, commercial or industrial end-users in the field using specialized field equipment that collects the halocarbon in a sealed/closed system and stored in DOT-approved cylinders or ISO containers and transported to the Bowling Green facility. Incoming cylinders are stored in a bonded warehouse and entered into the A-Gas Americas inventory system (described above).

Length of storage. Materials that are reclaimed and selected for plasma arc destruction are typically stored at the Bowling Green facility for 1-3 months prior to being connected to the PDUs (not counting material that has been staged pending clarification of regulatory status which is the subject of this application). Once sequenced for destruction in the PDUs, at the maximum feed rate of 120 lbs per hour, it takes take approximately 275 hours to destroy the contents of a typical ISO container.

Staging of ODS Material. All materials received by the Bowling Green facilities are in UN or DOT approved pressure cylinders or containers. Staging of materials is at first in warehouse storage. As halocarbons are moved into testing and filtration, they are transported using hand carts and dolly systems to the dedicated PDU building where they are connected to the PDU batch tanks(as described above).

Storage Capacity. All materials arrive at the Bowling Green facility in a DOT approved ISO container, or in individual cylinders or drums. The average amount of material stored on site for PDU destruction is approximately 60,000 lbs with a maximum capacity of approximately 180,000 lbs. As noted, materials destined for destruction are only a fraction of the total amount of material reclaimed or processed at the facility as refrigerants, fire suppressants, or recovered from medical devices. Although amounts vary with market conditions, the percentage of materials destroyed in the PDUs is typically 5-10% of the total amount of halocarbons reclaimed by A-Gas Americas annually.

Secondary Containment. The A-Gas Americas Bowling Green facility is a 140,000 square foot light manufacturing facility. The PDU processing section of the facility is a secured and separate portion of the facility (north building) which includes approximately 20,000 of usable space to handle and process ODS materials through the PDUs. Secondary containment is provided for all moveable cylinders/vessels in both

the secure storage facility and also the PDU area of this facility. A single floor drain in the PDU area (north building) is sealed when not in use.

B. Treatment of ODS Material. Treatment by plasma arc destruction is described above in Part II.B.

C. Plasma Destruction Units. The Plascon plasma arc units are described above in Part II.B.

D. Similar Management of Reclaimed Halocarbons. As described above in Part II, the management of halocarbons destined for destruction is substantially the same as management of halocarbons destined for re-sale or off-site destruction up until the storage container is physically connected to the plasma unit batch tanks.

E. Site security. All halocarbons at the Bowling Green facility are stored and handled within a secure indoor facility such that non-authorized personnel cannot access any storage containers or the PDUs, as described in the A-Gas Americas Hazardous Material Security Plan (Appx. H).

F. Emergency response/preparedness/contingency plan. Emergency response at the Bowling Green facility is addressed in the A-Gas Americas Emergency Action Plan, Doc. EHS-SP-008, dated Oct. 12, 2017 (Appx. I).

G. Equipment and inspection regularity. The PDUs have a required maintenance and inspection plan. The plan contains both periodic and condition-based maintenance activities. Key components of the PDU are replaced on a defined frequency, such as manifolds, flight tubes, and plasma arc injection bodies. The storage tanks are visually inspected daily, with required maintenance conducted when needed. Internal and external tank inspections are conducted consistently with ASME Pressure Vessel code, which are 5-year and 10-year cycles, respectively.

H. Reporting of any releases (when would reporting to Ohio EPA occur). Emergency response at the Bowling Green facility is addressed in the A-Gas Americas Emergency Action Plan, Doc. EHS-SP-008, dated Oct. 12, 2017 (Appx. I). Reporting of releases during the reclamation process would be required under the EPCRA TRI program for covered materials. Generally, reporting of CFC halocarbon reclamation is required generally under USEPA's Clean Air Act Subpart F rules, which anticipate a leak rate during reclamation of 1.5% (e.g., small leaks from container seals, couplings, connecting and disconnecting piping).

I. How would A-Gas respond to any type of a release? Emergency response at the Bowling Green facility is addressed in the A-Gas Americas Emergency Action Plan, Doc. EHS-SP-008, dated Oct. 12, 2017 (Appx. I).

J. Emergency contact(s) at the Bowling Green facility.

[redacted]

K. Financial assurance/Liability coverage. For the purpose of site closure, all refrigerants stored at the Bowling Green facility are stored in DOT-approved containers. Most if not all of the halocarbons at the facility, including [redacted] which is the primary focus of this waiver request, are valuable recycled commodities and can be re-sold to end-use customers or other reclaimers. In the event of facility closure, any remaining containers that cannot be sold could be easily transported by truck to a certified disposal facility for destruction (e.g., Clean Harbors in El Dorado, Arkansas or Heritage Environmental Services in Indianapolis). All halocarbon material is inventoried in the company's inventory management system. In addition, all [redacted] material is segregated from all other halocarbon material. At any given time, the amount of [redacted] material in process at the Bowling Green facility would be less than approximately [redacted] pounds, and the current cost to destroy material through Clean Harbors, with which A-Gas Americas has an ongoing business relationship, is approximately [redacted] per lb. The cost to freight this entire volume of material from the Bowling Green facility to the Clean Harbors facility would be approximately [redacted], which would include loading and offloading the materials. Accordingly, in the event of facility closure, in the unlikely event that disposal were necessary, the estimated cost to remove this halocarbon material from the Bowling Green facility and destroy the material offsite would be approximately [redacted] If legally required, A-Gas Americas would consider posting a letter of credit or surety bond in this amount.

* * *

Thank you very much for your consideration of this request. Please contact me with any questions at [redacted]

Respectfully submitted,

_____

Michael S Armstrong
President and Chief Operating Officer

Enclosures