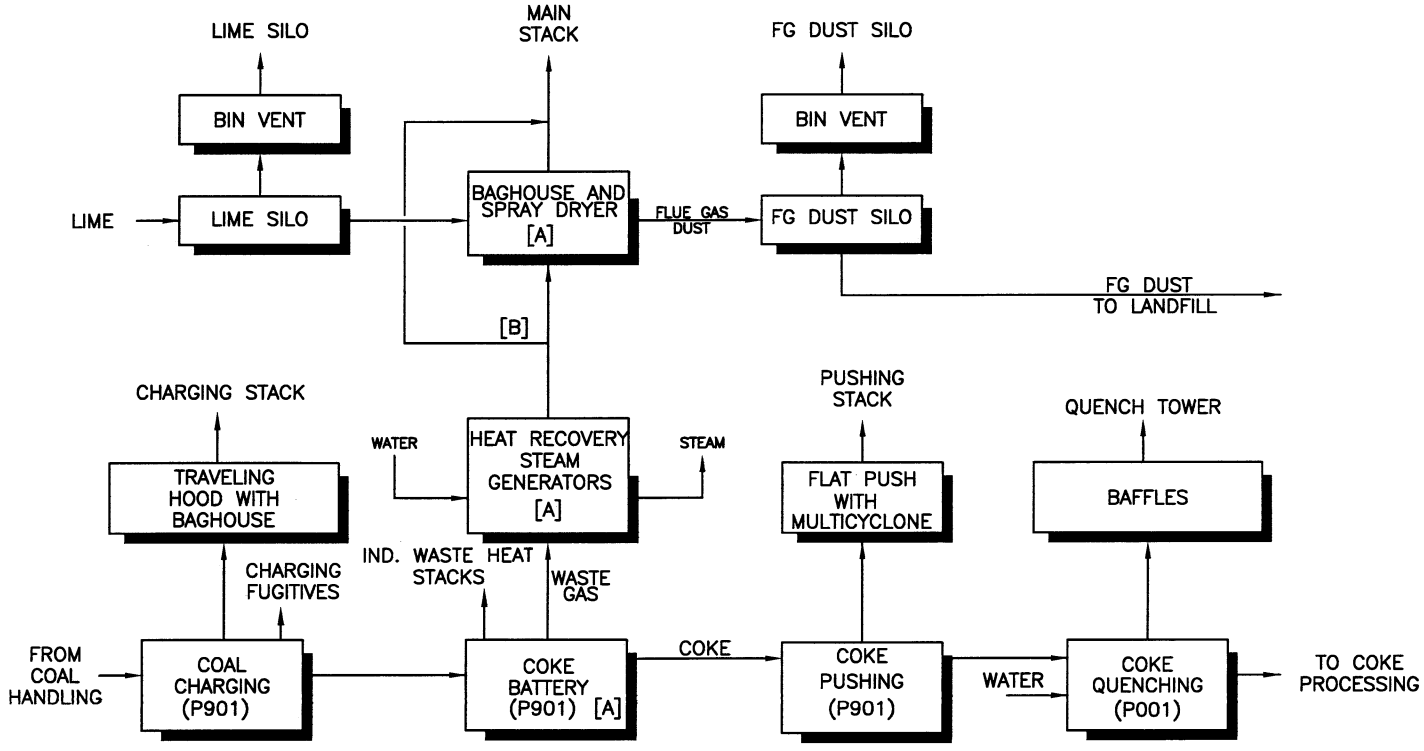

[A] 96% of waste gas to spray dryer/baghouse, 4% of waste gas vented.
[B] Waste gases bypass spray dryer and baghouse during maintenance.

URS	Figure 2–3 Coke Plant Flow Diagram Middletown, OH	REVISION: 1 DATE: 12/12/08	DRAWN BY: E.ROTHFELDT CHECKED BY: J. CARSON

FOR OHIO EPA USE
FACILITY ID: _____
EU ID: _____ PTI#: _____

EMISSIONS ACTIVITY CATEGORY FORM
COKE MANUFACTURING

This form is to be completed for each coke manufacturing operation. State/Federal regulations which may apply to coke manufacturing are listed in the instructions. Note that there may be other regulations which apply to this emissions unit which are not included in this list.

Note: This emissions activity category (EAC) form does not include roadways and parking areas, storage piles, and material handling operations which may also be associated with a coke manufacturing facility. Therefore, additional EAC forms for those emissions units may need to be submitted.

1. Reason this form is being submitted (Check one)

   ☒ New Permit ☐ Renewal or Modification of Air Permit Number(s) (e.g. F001) P901, F002 and F004

2. Maximum Operating Schedule: 24 hours per day; 365 days per year

   If the schedule is less than 24 hours/day or 365 days/year, what limits the schedule to less than maximum? See instructions for examples. _____

3. Identification of fugitive dust emissions units:

Check Those Emissions Units Present	Fugitive Dust Emissions Units	How many?
☒	Coal crushing (F002)	1
☒	Charging (P901)	1
☒	Coking (P901)	1
☒	Pushing (P901)	1
☒	Coke grinding and screening (F004)	1
☒	Other (describe): Address on other EAC Forms	

4. General coke-oven battery data:

a.	Battery number	A	B	C	
b.	No. of ovens per battery	40	20	40	
c.	Battery manufacturer	Custom	Custom	Custom	
d.	Type of battery	Heat Recovery	Heat Recovery	Heat Recovery	
e.	Oven height (meters)	N/A*	N/A*	N/A*	*Heat Recovery Ovens
f.	Maximum oven temp. (°F)				

5. Coal pulverizing and screening process data:

a. Manufacturer of pulverizing and screening equipment

__Gundlach Cage Paktors or equivalent: 85% - 1/8"_____

_____

b. Make or model number _____

c. Maximum capacity of pulverizing and screening equipment _____ pounds coal/hour

d. Maximum hourly production rate for the pulverizing and screening equipment

__500_____ tons coal/hour

e. Maximum annual production for the pulverizing and screening equipment

f. _912,500_____ tons coal/year

6. Charging process data:

a.	Battery number	A	B	C	
b.	Type of charging equipment	Heat Recovery	Heat Recovery	Heat Recovery	
c.	No. of charging ports per oven	NA	NA	NA	
d.	No. of gas collector mains	NA	NA	NA	
e.	Maximum capacity of charging equipment (tons coal/charge)	50	50	50	
f.	Maximum no. of charges per battery per hour	10	10	10	
g.	Maximum no. of charges per battery per day	30	15	30	
h.	Maximum no. of charges per battery per year	7,300	3,650	7,300	
i.	Average charging cycle time per oven (minutes)*	5	5	5	
j.	Average quantity of coal per charge (tons/charge)	50	50	50	
k.	Maximum quantity of coal charged per battery per hour (tons/hour)	500	500	500	
l.	Maximum quantity of coal charged per battery per year (tons/year)	365,000	182,500	365,000	
m.	Is coal preheating used prior to charging? (yes/no)	NO	NO	NO	
	If yes, what type of control device?				
n.	Operating steam vacuum in collection main (inches water)	NA	NA	NA	

*The charging cycle time begins when the coal from the charging system starts to enter the oven and ends when the last charge port lid is replaced.

7. Coking (doors, offtake piping and lids) process data:

a.	Battery number	A	B	C	
b.	No. of doors per battery	80	40	80	
c.	No. of offtake pipes per battery	NA	NA	NA	
d.	No. of jumper pipes connecting two ovens per battery	NA	NA	NA	
e.	No. of charging hole lids per oven per battery	NA	NA	NA	
f.	Average coking time per battery (hours)	48	48	48	

8. Pushing process data:

a.	Battery number	A	B	C	
b.	Maximum no. of pushes per battery per hour	10	10	10	
c.	Maximum no. of pushes per battery per day	20	10	20	
d.	Maximum no. of pushes per battery per year	7,300	3,650	7,300	
e.	Average pushing cycle time per oven (minutes)*	5	5	5	
f.	Average quantity of coke produced per push per oven (tons)	35.9	35.9	35.9	
g.	Maximum quantity of coke produced per battery per hour (tons/hour)	359	359	359	
h.	Maximum quantity of coke produced per battery per year (tons/year)	261,800	130,900	261,800	
i.	Percentage by weight of each type of coke produced:				
	Green coke	0%	0%	0%	
	Moderately green	0%	0%	0%	
	Clean coke	100%	100%	100%	

*The pushing cycle time commences with the moving of the coke mass from an oven and concludes when the quench car enters the quench tower.

9. Coke grinding and screening process data:

a. Manufacturer of grinding and screening equipment

_____NA_____

b. Make or model number _____NA_____

c. Maximum capacity of grinding and screening equipment _____ tons coke/hour

d. Maximum hourly production rate for the grinding and screening equipment ___500___ tons coke/hour

e. Maximum annual production for the grinding and screening equipment ___654,449___ tons coke/year

10. Control methods to be used for fugitive dust emissions from coke manufacturing:

(List the methods to be used to control fugitive dust emissions from each of the specific activities shown below. Use the control method codes listed below, (A) through (R), to identify them.)

Control Method Codes

Fugitive Dust Emissions Units	Coke-Oven Battery Number			
	A	B	C	
Coal crushing (F003)	C	C	C	
Charging (P901)	H	H	H	
Coking (P901)	L	L	L	
Pushing (P901)	Other	Other	Other	
Coke grinding and screening (F004)	Q	Q	Q	
Other (describe):				
_____	_____	_____	_____	_____
_____	_____	_____	_____	_____

The various control methods and their respective code letters are given in the following sections. Please complete the requested information for any control method(s) cited above.

Coal Crushing

(A) Watering:

Year installed _____
Source of water _____
Method of application _____
Frequency of application _____
Application rate _____ gallons sprayed/ton processed
Application points _____
Estimated control efficiency _____ %

(B) Wet suppression (chemical):

Year installed _____
Source of chemical(s) _____
Type of chemical(s) used
_____
Method of application _____
Frequency of application _____
Dilution _____ gallons chemical/1,000 gallons water

Application rate _____ gallons sprayed/ton processed
Application points _____
Estimated control efficiency _____ %

(C) Enclosure:

Year installed _____
Describe enclosure

__Complete enclosure - wet material _____

_____

Estimated enclosure capture efficiency ___99_____ %

(D) Enclosure, vent to fabric filter:

Describe enclosure

_____

_____

Estimated enclosure capture efficiency _____ %

(E) Other (describe):

_____

_____

Year installed _____

Charging

(F) Charging on-the-main/staged charging:

Year implemented _____
Describe (or attach) the staged charging operating procedure:

_____

_____

_____

_____

_____

_____

_____

Estimated control efficiency (assuming the uncontrolled emission rate is that occurring with conventional charging) _____ %

(G) Closed pipeline charging:

Year installed _____

Describe the pipeline charging system

_____

_____

_____

Estimated control efficiency (assuming the uncontrolled emission rate is that occurring with conventional charging) _____ %

(H) Other (describe):
Traveling hood with baghouse

Year installed _____

Coking

(I) Door and topside maintenance:

Year implemented _____
Describe (or attach) the door and topside maintenance program:

_____

_____

_____

_____

_____

_____

_____

_____

_____

_____

_____

_____

_____

_____

Estimated control efficiency (assuming the uncontrolled emission rate is that occurring with conventional coking practices and maintenance procedures) _____ %

(J) Hood, wet electrostatic precipitator:

Describe hood capture system

_____

_____

Estimated hood capture efficiency _____ %

(K) Shed, fabric filter:

Describe enclosure

_____

_____Es

timated shed capture efficiency _____ %

(L) Other (describe):
Lime spray dryer for SO_2 control, followed by a baghouse for PM, PM_{10}, and Lead

Year installed _____

Pushing

(M) Capture to wet scrubber:

Type of capture system
- ☐ shed, wet scrubber
- ☐ enclosed hot coke car, wet scrubber
- ☐ hood, mobile wet scrubber
- ☐ hood, stationary wet scrubber
- ☐ other (describe) _____

Is fugitive dust from the hot coke car captured and controlled during car movement to the quench tower? ☐ yes ☐ no

Describe capture system (shed, enclosure, hood)

_____

_____

Estimated capture efficiency (include fugitive dust emissions occurring during hot coke car movement to quench tower) _____ %

(N) Capture to baghouse:

Type of capture system
- ☐ hood ducted to baghouse
- ☐ other (describe)

_____

Is fugitive dust from the hot coke car captured and controlled during car movement to the quench tower? ☐ yes ☐ no

Describe capture system (shed, enclosure, hood)

_____

_____

Estimated capture efficiency (include fugitive dust emissions occurring during hot coke car movement to quench tower) _____ %

(O) Shed, wet electrostatic precipitator: _____

Describe shed capture system

_____

_____

Estimated shed capture efficiency (include fugitive dust emissions occurring during hot coke car movement to quench tower) _____ %

*Other: Flat car push, mobile hood, multicyclone.

Coke Grinding and Screening

(P) Enclosure:

Year installed _____
Describe enclosure:

_____

_____

Estimated enclosure capture efficiency _____ %

(Q) Enclosure, vent to fabric filter:

Describe enclosure:

Close capture hood

Estimated enclosure capture efficiency 95 %

(R) Other (describe):

_____

_____

Year installed: _____