3.0 COKE PLANT AIR POLLUTION CONTROLS

An air contaminant source must employ "best available technology," or BAT. BAT is defined in Ohio PTI Rules [3745-31-01 (T)] as follows:

> *Best available technology or "BAT" means any combination of work practices, raw material specifications, throughput limitations, source design characteristics, …… and air pollution control devices that have been previously demonstrated to the director of environmental protection to operate satisfactorily in this state or other states with similar air quality on substantially similar air pollution sources.*

In the case of the heat recovery coke making technology, BAT has been demonstrated by Haverhill North Coke Company (HNCC) in Franklin Furnace, Ohio, which started operations in 2005. The air pollution control equipment, procedures, and work practices at MCC will be those approved by Ohio EPA and successfully demonstrated at HNCC. BAT will be applied to each separate operation or activity with the potential to emit more than 10 tons/year of each criteria air contaminant.

Ohio EPA issued a PTI to the FDS Coke Plant in Oregon, Ohio. This is a heat recovery coke plant to be designed by the German company Uhde (a ThyssenKrupp company). The conceptual design is very different from the heat recovery SunCoke design to be used at MCC. The ovens are larger — designed to carbonize 67 tons of coal compared to 50 tons at MCC. Charging is to be accomplished by a stamped (compacted) coal cake with a very small air pollution control system [3,000 cubic feet per minute (cfm) compared to the 45,000 cfm system at MCC]. Coke is to be pushed as a coke cake with a small air pollution control system (9,500 cfm compared to the 50,000 cfm system at MCC). To the best of our knowledge, this heat recovery coke oven design, charging system, and pushing system have never been constructed or used anywhere in the world. Consequently, the technology and limits for the FDS facility are not demonstrated and do not represent BAT for the MCC facility.

Air pollution controls and procedures will also be required to comply with federal Maximum Achievable Control Technology (MACT) standards. The specific MACT requirements are discussed in Section 5.0.

Emissions from material transfer will be controlled by enclosures except in a few areas where the potential to overheat coal or interfere with dispersion of steam from coke may pose a safety hazard. Plant roads will be paved. A traveling hood/baghouse system on the pushing/charging machine will control charging emissions that escape the ovens. HRSGs will recover heat from the oven waste gases and protect the downstream pollution control devices. PM, SO_2, and mercury will be removed from the oven gases in a lime spray dryer/baghouse system. A mobile flat push hot car with multicyclone will capture pushing emissions. Quenching will be performed in a conventional quench tower with baffles. Quenching emissions will be controlled by maintaining dissolved solids levels in the quench water at or below 1,100 mg/L and by a unique baffle design. A baghouse will control emissions from the coke screening and crushing facilities. Information about air pollution controls is presented, by pollutant, in the following sections.

3.1 Sulfur Oxides (SO_2 and H_2SO_4)

The primary sources of sulfur oxides emissions are the coke oven flue gases. Sulfuric acid mist (H_2SO_4) is a small fraction of the sulfur oxides. Consequently, the focus of this section is on SO_2. Although SO_2 is also present in the emissions from pushing and charging, the concentrations are dilute [less than 1 to 25 parts per million (ppm)]. No SO_2 controls are technically feasible for pushing or charging.

SO_2 is released along with the volatile fraction of the coal as the coking cycle proceeds; however, approximately half of the sulfur in the coal remains in the coke product. The emissions are normally released to the atmosphere from an air pollution control system that collects cooled flue gas from the discharge side of the HRSGs. During HRSG or spray dryer/baghouse inspection and maintenance, emissions are released from individual waste heat stacks.

3.1.1 Lime Injection and Spray Dryer/Absorber (Dry Scrubber)

In dry scrubbers, a calcium hydroxide slurry (lime mixed with water) is introduced into a spray dryer tower (see Figure 3-1). The slurry is atomized and injected into the gases, where droplets react with SO_2 as the liquid evaporates. This produces a dry product that is collected in

the bottom of the spray dryer and in the particulate removal equipment (i.e., baghouse). Figure 3-1 shows how lime and water (calcium hydroxide slurry) are introduced into the spray dryer tower (top center), where they mix with the gas, dry, and react with SO_2 to form calcium sulfite ($CaSO_3$) and calcium sulfate ($CaSO_4$). A fabric filter downstream of the spray dryer removes the ash, $CaSO_3$, $CaSO_4$, and unreacted lime. The collected solids are either recycled back through the process or used for other off-site applications.

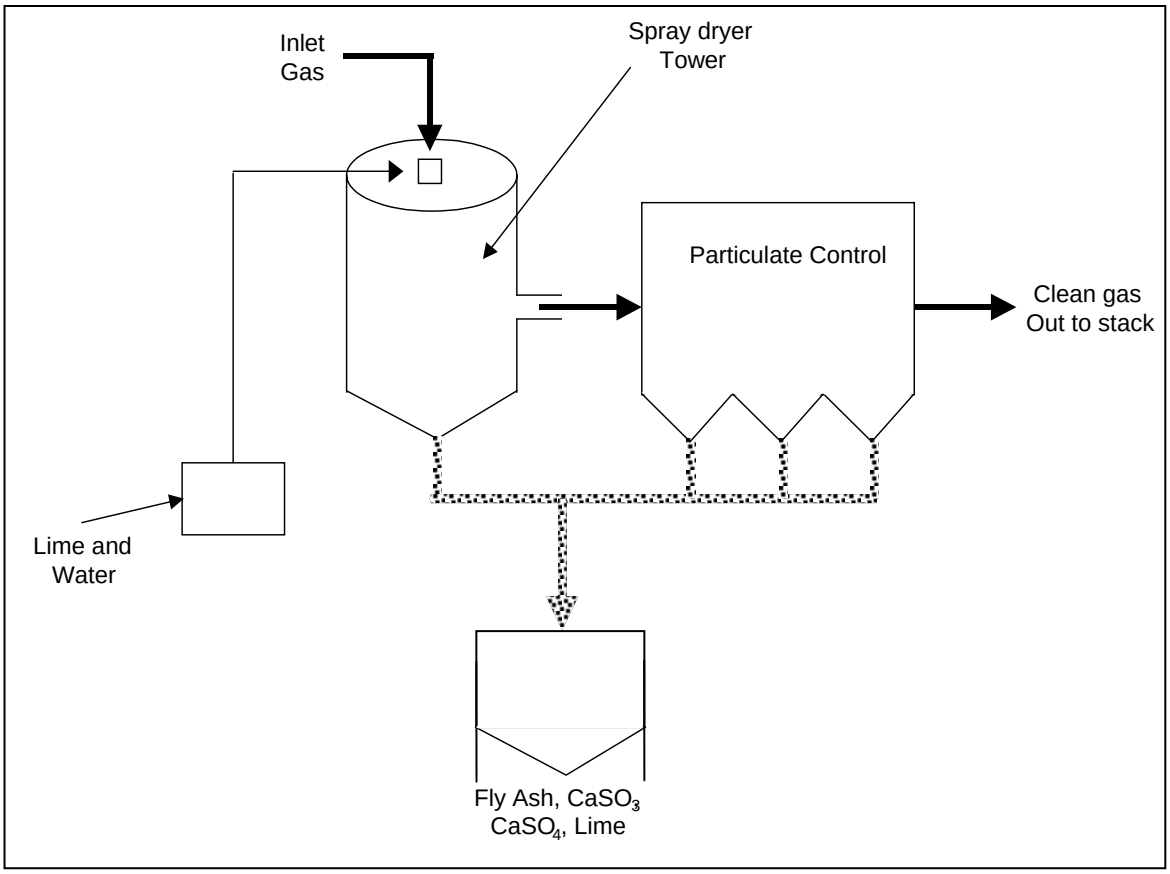

Figure 3-1. Spray Dryer Gas Desulfurization Process

This system is categorized as a "dry" system because the end product of the SO_2 conversion reaction is a dry material. Although termed as a dry system, this air pollution control system uses water for evaporative cooling and for the SO_2 reaction. Unlike a wet scrubbing system, however, there is no liquid blow-down stream from the dry system. The dry system has been used in low-sulfur coal applications to effectively remove SO_2 from a gas stream with removal efficiencies from 70% to 90%.

There is a potentially significant advantage for this technology when considering mercury control. When used with activated carbon injection, the residence time in the spray dryer, followed by the efficient particulate collection of a baghouse, has the potential to effectively remove particulate mercury as well as ionic and vapor phase mercury.

3.1.2 Heat Recovery Steam Generators and Spray Dryer/Baghouse Maintenance

As previously discussed, the individual waste heat stacks will be opened during HRSG or spray dryer/baghouse inspection and maintenance so that these procedures can be performed safely. During HRSG maintenance, planned for 10 days/year per HRSG, 20 ovens will vent waste gases directly into the atmosphere, bypassing the spray dryer/baghouse system. The remaining 80 ovens will continue to pass through the spray dryer/baghouse. During spray dryer/baghouse maintenance, gases from the ovens will vent through the waste heat stacks for 5 days. During both these periods, gases from the ovens will still pass through the common tunnel afterburner system, which will fully combust the gases prior to release into the atmosphere. On an annual basis, 96% of the waste gases from ovens will pass through the spray dryer/baghouse.

Five options were evaluated for controlling sulfur oxides from the individual waste heat stacks during the 10 days of maintenance on each HRSG. These included modifications that would allow the waste gases to be treated in the primary system. In addition, stand-alone air pollution controls could be installed at each individual waste heat stack for use during maintenance or to replace the primary air pollution control system. These five options were as follows:

- Spray quenches at each HRSG to cool individual waste heat gas
- Central spray quench and refractory ductwork
- Larger HRSGs and waste heat tunnel
- Additional HRSGs
- Individual wet or dry scrubbing systems

The larger waste heat tunnel was not technically feasible since it would require redesigning the uptakes, oven walls, and sole flues. This would represent a radical change to the

heat recovery oven design. The lowest estimated capital cost of any of the other options would be $21,700,000 with annual costs of $4,100,000. At this cost, none of the other options are cost effective considering that the system would only be needed 10–15 days/year.

3.1.3 Best Available Technology for Sulfur Oxides from Coking Flue Gases

Sulfur oxides from the coke oven flue gases will be controlled by:

- Using low-sulfur coal (less than or equal to 1.3%);
- Using a spray dryer/baghouse, designed to remove 90% of the uncontrolled SO_2 while online;
- Minimizing emissions from waste heat stacks during HRSG inspection and maintenance by bringing only one HRSG offline at a time so that 80% of the waste gases will go through the primary system;
- Limiting HRSG maintenance to no more than 2.7% of the operating hours (10 days/year per HRSG); and
- Limiting spray dryer/baghouse inspection and maintenance to no more than 1.4% of the operating hours (5 days/year) by using appropriate personnel and scheduling the work to be performed in the shortest possible time.

3.2 Nitrogen Oxides Emissions

The primary sources of nitrogen oxides (NO_x) emissions are waste heat gases. Small amounts of NO_x are present in the emissions from pushing and charging but are not addressed here since these are intermittent sources with dilute concentrations (less than 10 ppm).

NO_x emissions from coking or coal combustion are primarily nitric oxide, with only a fraction of the NO_x present as nitrogen dioxide. NO_x is formed from the thermal reaction of nitrogen in combustion air in the combustion flame and from oxidation of nitrogen in the coal. NO_x formed from the thermal reaction is dependent on temperature, oxygen present, and residence time. Thermal formation of NO_x is complex, and the rate is significant at temperatures above 2,800°F.

3.2.1 Staged Combustion

Staged combustion controls NO_x by limiting the oxygen present at temperatures where NO_x formation is likely and/or by suppressing peak temperatures that increase NO_x formation during gas combustion. The heat recovery coke ovens use three discrete regions for staged combustion of the coal volatiles. The regions are the crown, the sole flues, and the waste heat tunnel. The crown is the first stage of air addition. This operates in a reducing atmosphere where minimal oxygen is present for NO_x formation.

The sole flues receive secondary air and operate in a reducing or oxidizing atmosphere as dictated by the oven gas rates. NO_x formation is minimized in the sole flues by controlling the temperatures. The final stage is the common tunnel afterburner, which is always operated in an oxidizing mode. NO_x formation is limited in this region by adding enough tertiary air to cool the gases below temperatures where NO_x is formed (1,600–2,000°F). The HRSGs cool the waste gases to approximately 350–400°F. Consequently, no additional NO_x is formed downstream of the HRSGs, and NO_x emissions are the same at the main stack and waste heat stacks.

Staged combustion is an inherent part of the heat recovery process that results in NO_x emissions of 1 lb/ton of coal (or approximately 58 ppm at 8% oxygen) at both the main and waste heat stacks.

3.2.2 Heat Recovery Steam Generator and Spray Dryer/Baghouse Maintenance

Staged combustion is a combustion control technology used for all the ovens whether or not HRSG or spray dryer/baghouse maintenance is occurring. It applies to coke oven emissions from the main stacks and from the individual waste heat stacks.

3.2.3 Best Available Technology for Nitrogen Oxides from Coking Flue Gases

NO_x from the coke oven flue gases will be controlled by staged combustion to produce NO_x emissions of 1 lb/ton of coal.

3.3 Particulate Matter from Coking and Related Activities

Air pollution control equipment and work practices will be used to control PM and PM_{10} from pushing, charging, quenching, and coke crushing and screening. Several miscellaneous fugitive points such as coal unloading, coal and coke storage, coal and coke transfer, coal sizing, and roads account for less than 5% of the PM_{10} and are each less than 10 tons/year. Fugitive PM controls are summarized in Table 3-1.

Table 3-1

Controls for Fugitive PM

Emission Unit	Control Technology
Coal unloading	Enclosure, wet suppression
Coal piles	Tramming luffing conveyor, wet suppression
Blended coal storage	Enclosed silo
Coal conveyors	Enclosed (except where prohibited for safety), wet material
Coal crushing	Enclosure of rotary crusher, wet material
Coke conveyors	Enclosed (except where prohibited for safety), wet material
Coke crushing/screening	Enclosure, fabric filter
Emergency coke pile	Stacker conveyor load-in, load-out with front-end loader, wet material
Roadways	Paving

3.3.1 Coking, Charging, and Coke Crushing and Screening

Fabric filtration has been widely applied to coal combustion sources since the early 1970s and consists of a number of filtering elements (bags), along with a bag cleaning system contained in a main shell structure incorporating dust hoppers. Collection efficiencies of fabric filters (baghouses) can be as high as 99.9%. Variability in overall control efficiencies associated with baghouses is due to the efficiency of the capture device (e.g., hood) used to route the air stream to the baghouse. Baghouses have been used with the heat recovery coking process and related activities and are generally regarded as the preferred control device except where prohibited by other factors.

The baghouse systems and their applicability to the proposed MCC coking process are discussed in the following sections.

3.3.1.1 Coking Process

Because the ovens at MCC will be maintained under negative pressure, the capture efficiency associated with the waste gases is 100% except during periods of inspection and maintenance of the HRSGs or the spray dryer/baghouse. PM emissions from the heat recovery coke oven are also partially controlled by combustion conditions in the sole flues and in the common tunnel/afterburner. An advantage of using a baghouse for this application is that the filter cake on the bags enhances SO_2 removal by the spray dryer.

The MACT standard for coke oven batteries is contained in 40 Code of Federal Regulations (CFR) 63, Subpart L, National Emission Standards for Coke Oven Batteries. The requirements are 0% leaks for doors and daily monitoring of pressure in each oven or in a common battery (afterburner) tunnel. The heat recovery ovens proposed for MCC will be operated under negative pressure, which meets the requirements of the MACT rule and ensures compliance with the 0% door leakage standard.

3.3.1.2 Charging

Oven charging takes approximately 4 minutes. Air flows into the oven through the open door during charging, and virtually all the charging emissions are captured and sent to the sole flues and common tunnel during the first 3 minutes. During the last minute, as the ram retracts, some of the charging emissions may escape the oven. A traveling hood and baghouse control these emissions. These controls with an emission limit of 0.0081 lb/dry ton coal for filterable PM are consistent with the MACT standards for charging nonrecovery coke oven batteries in 40 CFR 63, Subpart L, National Emission Standards for Coke Oven Batteries.

3.3.2 Pushing

Flat car pushing will be used to remove the coke from the oven at the end of the cycle. Flat car pushing is much different than conventional pushing. With conventional pushing, the coke bed falls into a hot car where it breaks apart and produces the traditional, large, hot pushing plume. The plume may be collected by either a mobile shed or by a large stationary coke side

shed. With flat car pushing, the coke bed is pushed onto a flat car with a hood that encloses the bed on the sides and top. Air from this hood is ducted to an air pollution control device, fan, and stack on a mobile car. The hood and air pollution control device will travel from the oven to the quench tower. The coke bed will be transferred, intact, to a quench car and quenched in a conventional wet quench tower. The advantage of flat car pushing is that the coke bed stays intact and there is no large thermal plume.

The air pollution control device used with flat car pushing was chosen with three considerations. First, a close-capture hood is to be used. The coke bed is approximately 2,000°F, and at times the gases exiting the hood are extremely hot. Second, the flat push hot car is cooled with water after transferring the coke to the quench tower, and the gases at times have high moisture content. Thirdly, the mobile system must be short enough to pass below the hot ducts that take the gases from the common tunnel to the HRSGs (approximately 20 ft) and narrow enough to fit on a rail car.

A baghouse or electrostatic precipitator is not feasible for use with a flat push hot car because of the gas temperature, gas moisture content, and physical size constraint. Mechanical collectors use inertial separation to remove particles from gas streams. Large cyclones are generally not very efficient on small particles because the inertial force is inversely proportional to the diameter (or turning radius) of the device. Cyclones are optimized for high collection efficiency by using small diameters, long cylinders, and high inlet velocities. A number of small cyclones may be operated in parallel for high efficiency and large gas volumes. These are referred to as multi-tube cyclones, or multicyclones. High temperatures are not as much of an obstacle with mechanical collectors since they are typically constructed out of metal. Multicyclones can tolerate moist gas streams. Since the individual cyclones are small, a multicyclone can be configured to meet the size criteria of the heat recovery battery. A multicyclone can handle the hot gases from the close capture hood and the moisture from quenching and can be configured to meet the size constraints of the heat recovery coke oven design. Flat car pushing with a multicyclone is appropriate from an environmental control perspective since it will result in a 96% reduction in uncontrolled PM_{10} emissions from conventional pushing using pollution prevention and a multicyclone.

The flat push hot car with a multicyclone will meet the PM emission limit in the MACT for Pushing, Quenching, and Battery Stacks (40 CFR 63, Subpart CCCCC). The limit is 0.04 lb PM/ton coke for filterable PM if a mobile control device that captures emissions during travel to the quench tower is used. The MACT standards also require the work practice of physically looking into each oven prior to pushing. This is possible because of the negative pressure oven design. If the coke bed has stopped gassing and no smoke is observed, the oven is deemed coked out and can be pushed.

3.3.3 Quenching

Conventional wet quenching is the most common quenching technique used in the coke industry and is accomplished by directly cooling a hot car of coke with a deluge of water. In the wet quenching process, water is used to cool the 2,000°F coke. The intact coke bed from the flat push is moved directly into the quench tower where water is dumped onto it. A portion of the water evaporates and travels upward through a tower before exhausting to the atmosphere. The majority of the water used for quenching drains from the hot car into a settling basin where solids settle out and are periodically dredged from the basin. Water from the settling basin is recirculated to the quench tank and used in subsequent quenches. Make-up water must be added to the basin to replace evaporative losses. In addition, dissolved solids from the quench water may become entrained in the steam plume rising from the tower. The typical control is to install baffles in the quench tower to reduce these emissions. MCC will use an improved baffle design – bent steel plates approximately 3 in. apart that impart tighter “turns” to the gas stream compared to conventional rows of wood baffles. This should reduce PM compared to conventional baffles. Another control is to use water with limited dissolved solids or other pollutants to quench the coke.

These controls are consistent with the MACT standards for quenching in 40 CFR 63, Subpart CCCC, National Emission Standards for Hazardous Air Pollutants (NESHAPs) for Coke Ovens: Pushing, Quenching, and Battery Stacks; Final Rule.

3.3.4 Coke Crushing and Screening

For the coke crushing and screening operations, a baghouse will be used as the control device.

3.3.5 Heat Recovery Steam Generators and Spray Dryer/Baghouse Maintenance

The individual waste heat stacks will be opened during HRSG or spray dryer/baghouse inspection and maintenance so that these procedures can be performed safely. During HRSG maintenance, planned for 10 days/year per HRSG, 20 ovens will vent waste gases directly into the atmosphere, bypassing the spray dryer/baghouse system. The remaining 80 ovens will continue to pass through the spray dryer/baghouse. During spray dryer/baghouse maintenance, gases from the ovens will vent through the waste heat stacks for 5 days. During both these periods, gases from the ovens will still pass through the common tunnel afterburner system, which will fully combust the gases prior to release into the atmosphere. On an annual basis, 96% of the waste gases from ovens will pass through the spray dryer/baghouse.

As previously discussed, options to treat the gases from the waste heat stacks during these intermittent 5–10 day periods are not technically or economically feasible.

3.3.6 Best Available Technology for PM/PM_{10} from Coking and Related Activities

The BAT controls for PM/PM_{10} and expected emission levels are summarized in Table 3-2. Ohio EPA instructed MCC to provide the best information available for the following categories: PM filterable, PM_{10} filterable, PM_{10} total, and $PM_{2.5}$ filterable.

3.4 <u>Carbon Monoxide and Volatile Organic Compounds</u>

A discussion of carbon monoxide (CO) and volatile organic compound (VOC) controls is combined here due to the similarity in approach for control of these emissions during the coking process and related activities. CO and VOC emissions are potentially generated during the

Table 3-2

Summary of PM Controls for Coking, Charging, Pushing, and Quenching

Emission Unit	Control Technology	Expected PM Filterable Emission Level	Expected PM_{10} Filterable Emission Level	Expected PM_{10} Total Emission Level[a]	Expected $PM_{2.5}$ Filterable Emission Level
Main Stack	Fabric Filter on Waste Gas Stream (Coking Process)	0.005 gr/dscf	0.005 gr/dscf	0.011 gr/dscf	0.005 gr/dscf
Waste Heat Stacks	Optimize Combustion (Coking Process during HRSG Maintenance)	0.049 gr/dscf	0.049 gr/dscf	0.083 gr/dscf	0.049 gr/dscf
Pushing	Flat Push Hot Car with Multicyclone	0.04 lb/ton coke	0.04 lb/ton coke	0.08 lb/ton coke	0.04 lb/ton coke
Charging	Oven Negative Pressure + Fabric Filter with Traveling Hood	0.0081 lb/ton dry coal	0.0081 lb/ton dry coal	0.016 lb/ton dry coal	0.0081 lb/ton dry coal
Coke Crushing	Fabric Filter	0.008 gr/dscf	0.008 gr/dscf	0.008 gr/dscf[b]	0.008 gr/dscf
Quenching	Baffles and Water with TDS limit	0.448 lb/ton coal[b]	0.044 lb/ton coal[b]	0.044 lb/ton coal[c]	0.027 lb/ton coal[b]

[a] Filterable plus condensable
[b] Filterable only expected
[c] no data on condensable fraction

dscf = dry standard cubic feet
HRSG = Heat Recovery Steam Generator
PM = Particulate matter
PM_{10} = Particulate matter less than 10 micrometers in diameter
TDS = Total Dissolved Solids

conversion of coal to coke and during pushing activities. The concentrations of CO and VOCs are less than 5 ppm in the charging emissions.

3.4.1 Coking Emissions

In a byproduct coke oven, the volatile fraction of coal is recovered instead of burned. In the heat recovery process, volatile matter is released from the coal bed and combusted within the coke oven. Heat that is generated drives the coking process. The design of the heat recovery process is to have complete combustion and thereby release all the available heat. This approach naturally produces low emissions of CO and VOCs. The gases remain in the sole flues and common tunnel approximately 7 seconds where they are exposed to oxidizing conditions and

temperatures from 1,600 to 2,500°F. HRSG maintenance has no effect on CO and VOC emissions. The emissions are the same whether exhausted from the main stack or the vent stacks.

These operations will also meet MACT for hazardous air pollutants (HAPs). Specific requirements for heat recovery batteries are 0% leaks for doors and daily monitoring of negative pressure in each oven or in a common battery tunnel. As previously discussed, the heat recovery ovens proposed for MCC will be operated under negative pressure. This will meet the requirements of the MACT rule and is also the method to ensure the 0% door leakage standard is met. HRSG maintenance has no effect on oven pressure. The ovens will operate under negative pressure in either case.

The destruction of VOCs and CO is expected to be in the 98–99% range for the coke ovens. This destruction is inherent to the coking process, which aims to liberate all heat within the oven.

3.4.2 Pushing Emissions

An advantage of the heat recovery coking process is that "green" pushes can virtually be eliminated. Green pushes result when coke is pushed that has not been fully carbonized. The uncarbonized material ignites when the oven is pushed. Standard work practice for heat recovery ovens is for the operator to look in the oven to determine whether carbonization is complete prior to pushing the oven. This is only possible with a negative pressure design. This same mechanism also ensures minimal CO emissions.

These controls are consistent with the MACT standards for pushing in 40 CFR 63, Subpart CCCC, NESHAPs for Coke Ovens: Pushing, Quenching, and Battery Stacks; Final Rule.

3.4.3 Best Available Technology for Carbon Monoxide and Volatile Organic Compounds

CO and VOCs from the coke oven flue gases will be controlled by good combustion to limit the CO concentration to 20 ppm and the VOC concentration to 10 ppm (as carbon).

CO and VOC from pushing will be controlled by inspecting the oven to determine whether carbonization is complete prior to pushing the oven (using procedures in the MACT standard).

3.5 Hazardous Air Pollutants

All the air pollution controls proposed for all the emission units will meet the requirements of the MACT standards. This section includes some additional considerations on specific HAPs.

3.5.1 Organic Hazardous Air Pollutants

Two of the primary advantages of the heat recovery technology are the negative pressure operation and the long residence time at oxidizing conditions in the sole flues and common tunnel. As discussed in Section 3.5, the flue gases are at temperatures from 1,600 to 2,500°F for approximately 7 seconds. This adequately controls organic HAPs because carbon and hydrogen containing compounds are oxidized to carbon dioxide and water.

3.5.2 Particulate Hazardous Air Pollutants

Metals and other particulate HAP emissions are generally small from heat recovery coking compared to coal combustion because it is primarily the volatile portion of the coal that is driven off during the coking process. This is illustrated by the small magnitude of uncontrolled metals emission factors listed in the EPA source emissions database (AP-42 Section 12.2, Coke Production). These emissions will be even smaller after the coke oven flue gases pass through the spray dryer and baghouse.

3.5.3 Hydrogen Chloride

Chlorine will be present at some level in the coal used at MCC. Some of the chlorine will remain in the coke and some will report to the spray dryer/baghouse as hydrogen chloride (HCl).

Based on test data from a SunCoke Energy heat recovery coke making facility, HCl removal is expected to be 95%.

3.5.4 Mercury

During coking, some of the mercury in the coal is volatilized and converted to mercury vapor. This vapor may subsequently form mercury compounds or may be adsorbed onto the surface of other particles. The mechanisms are complex, but mercury is ultimately present as a mixture of mercury vapor, ionic mercury compounds, and particulate mercury. A spray dryer followed by a baghouse has the potential to effectively remove mercury in the ionic and particle phases.

Various studies have shown that carbon injection has the capability to remove vapor-phase mercury with a spray dryer/baghouse. The sorbent is injected upstream of the spray dryer. The gas-phase mercury contacts the sorbent in the ductwork and spray dryer and attaches to its surface. The sorbent with the mercury is then collected in the baghouse.

This potential for mercury control is potentially a significant advantage for the spray dryer/baghouse when used with carbon injection. This same type of system will be installed at the Haverhill II facility currently being constructed in Franklin Furnace, Ohio. The initial phase of the Haverhill II system operation will be used for optimization of the carbon injection system and evaluation of its effectiveness at a rate up to 2 lb carbon per million actual cubic feet of flue gas. A carbon injection system that incorporates the results of the Haverhill experience will be installed at MCC.

This page intentionally left blank.