Draft: 6/30/93

DRAFT

DETERMINATION OF STACK GAS VELOCITY AND VOLUMETRIC FLOW RATE
(Three-Dimensional Pitot Tube)

1. Applicability and Principle

1.1 Applicability. This method is applicable for measurement of the average axial velocity (i.e., velocity vector parallel to the axis of the stack or duct) of a gas stream and for quantifying gas flow under non-axial flow conditions and limitations specified in section 3.1.

1.2 Principle. The average gas velocity in a stack is determined from the average axial velocity and the gas density. A three-dimensional (3-D) pitot tube provides the resultant velocity pressure and the pitch and yaw angles of the velocity vector. From this information, the axial velocity is calculated.

2. Apparatus

Specifications for the apparatus are given below. Any other apparatus that has been demonstrated (subject to the approval of the Administrator) to be capable of meeting the specifications will be considered acceptable. (*Note*: See Figure 2F-1. Both the pitch and yaw angles are measured from a line passing through the traverse point and parallel to the stack axis. The pitch angle is the angle of the gas flow component in the plane that INCLUDES the traverse line and is parallel to the stack axis. The yaw angle is the angle of the gas flow component in the plane PERPENDICULAR to the traverse line at the traverse point and is measured from the line passing through the traverse point and parallel to the stack axis.)

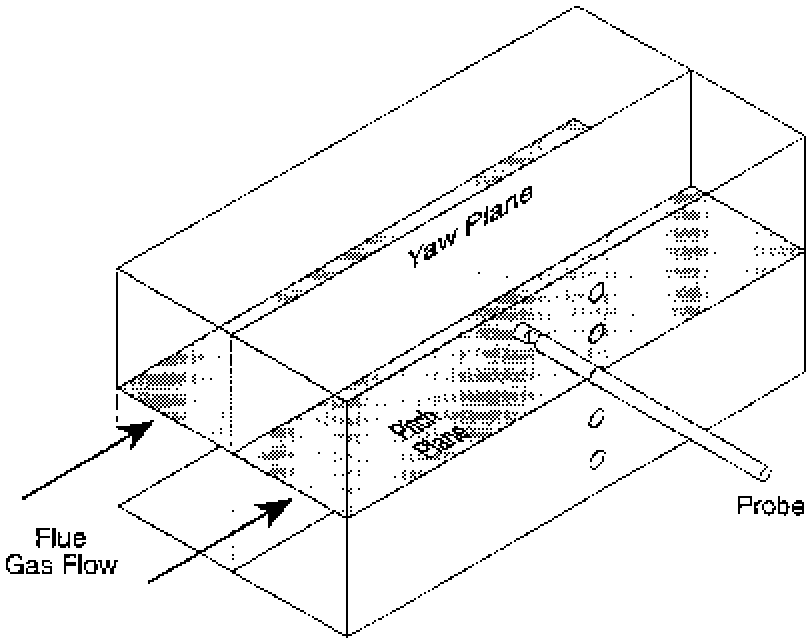

Figure 2F-1

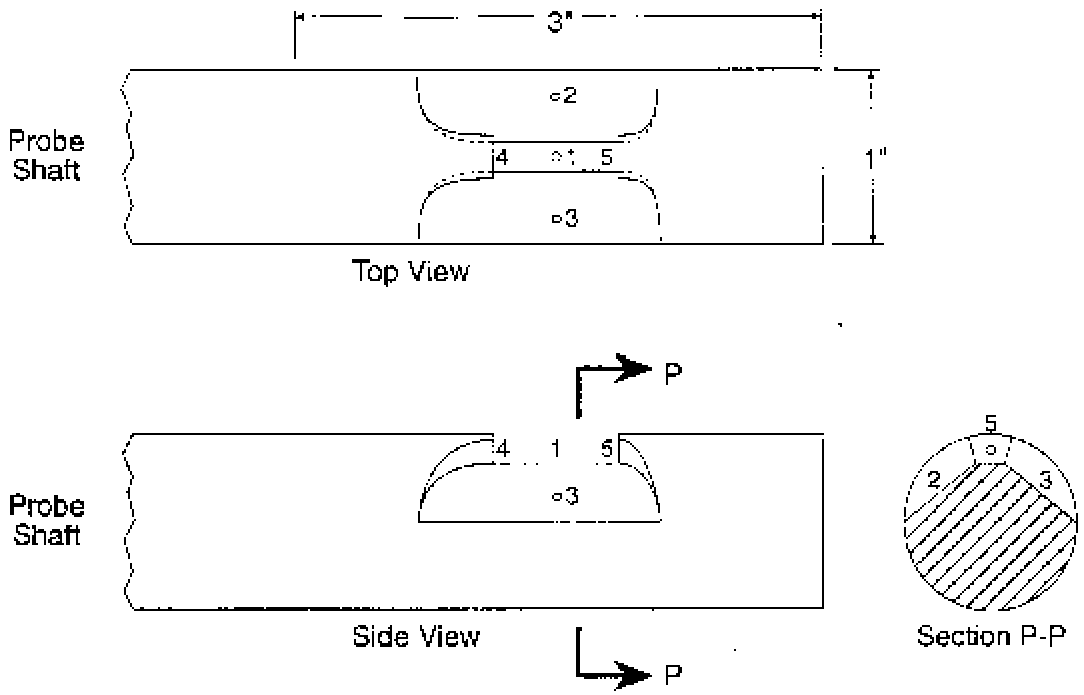
3"
Probe
Shaft
2
4
1
5
3
1"
Top View
P
Probe
Shaft
4
1
5
3
Side View
P
5
2
3
Section P-P

Figure 2F-2

2.1 Directional Probe. Any directional probe, such as United Sensor Type DA Three-Dimensional Directional Probe, capable of measuring both the pitch and yaw angles of gas flows is acceptable. (***Note***: Mention of trade name or specific products does not constitute endorsement by the U.S. Environmental Protection Agency.) Assign an identification number to the 3-D pitot, and permanently mark or engrave the number on the body of the probe. Calibrate the 3-D pitot according to the procedures in section 4. See Figure 2F-2 for a schematic of a 5-hole prism shaped sensing head. A brief description of the measurements involved follows:

2.1.1 The five holes of the 3-D sensing head are numbered 1 through 5, and the pressures measured at each hole are referred to as P_1, P_2, P_3, P_4, and P_5.

2.1.2 $P_2 - P_3$ = difference in static pressures. Rotating the sensing head and nulling this reading (i.e., letting $P_2 = P_3$) allows determination of the yaw angle from a protractor or other suitable angle measuring device. The yaw angle is the degree of rotation from the axis of the duct or stack. Clockwise rotation is labeled as positive and counter-clockwise rotation is labeled as negative.

2.1.3 $P_4 - P_5$ = function of pitch angle. The pitch angle for a sensing head is obtained from a calibration curve that plots the ratio F_1 or $(P_4 - P_5)/(P_1 - P_2)$ vs. pitch angle obtained from a protractor or other suitable angle measuring device (see Figure 2F-4 for a typical calibration curve). Flow towards the tester ($P_4 > P_5$) is labeled as positive, and flow away from the tester ($P_5 > P_4$) is labeled as negative.

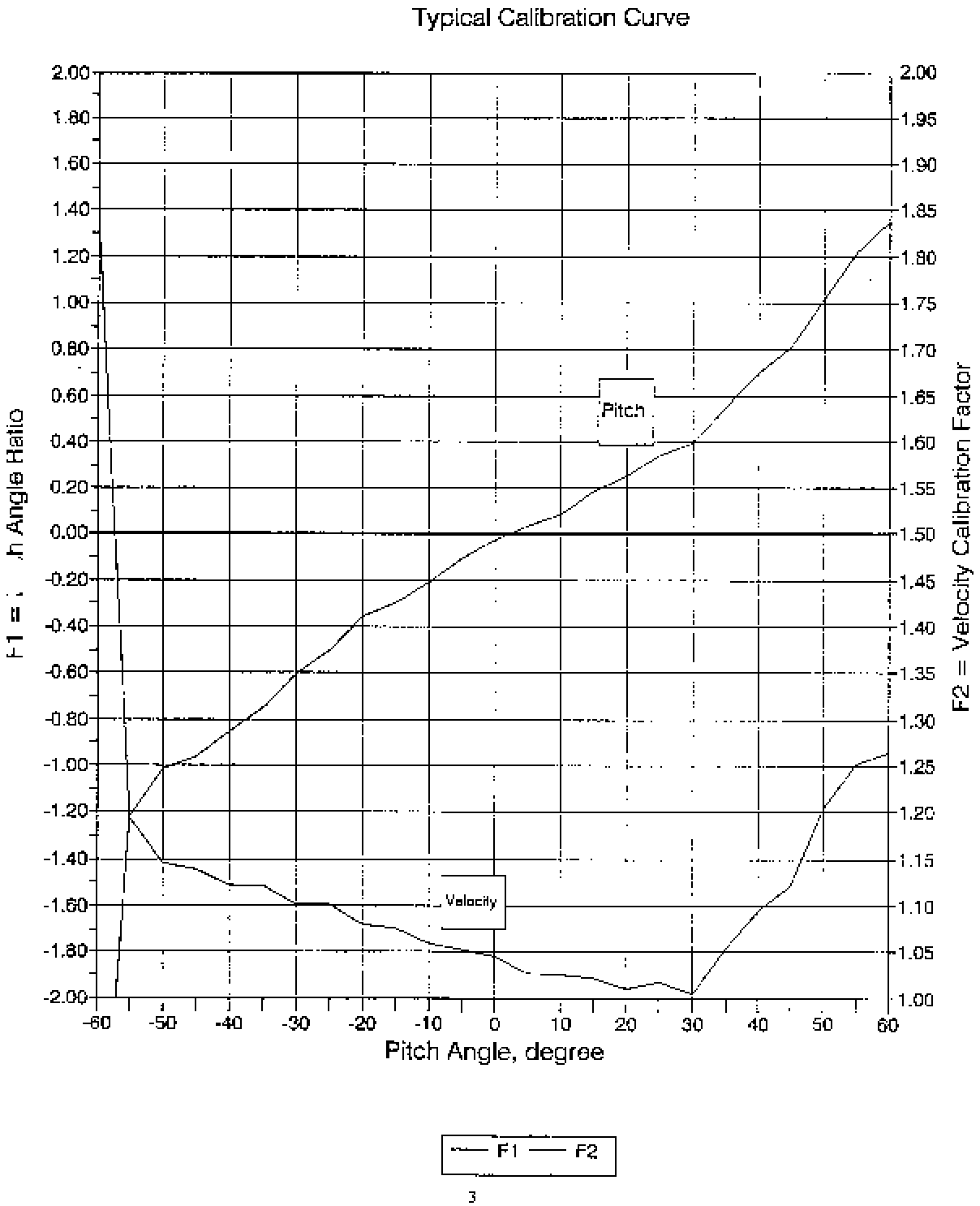
Typical Calibration Curve
F1 = Pitch Angle Ratio
F2 = Velocity Calibration Factor
Pitch Angle, degree
Pitch
Velocity
F1
F2
2.00
1.80
1.60
1.40
1.20
1.00
0.80
0.60
0.40
0.20
0.00
-0.20
-0.40
-0.60
-0.80
-1.00
-1.20
-1.40
-1.60
-1.80
-2.00
1.95
1.90
1.85
1.80
1.75
1.70
1.65
1.60
1.55
1.50
1.45
1.40
1.35
1.30
1.25
1.20
1.15
1.10
1.05
1.00
-60
-50
-40
-30
-20
-10
0
10
20
30
40
50
60
3

Figure 2F-4

2.1.4 P_1 - P_2 = function of velocity pressure. This pressure differential is not equal to the velocity pressure, P_t - P_s (obtained from a standard pitot tube), at all pitch angles. The velocity pressure is obtained from a calibration curve that plots the 3-D pitot coefficient ratio F_2 or C_{ps} $[(P_t - P_s)/(P_1 - P_2)]^{1/2}$ against pitch angles (see Figure 2F-4 for a typical calibration curve). C_{ps} is the standard pitot tube coefficient.

2.2 Yaw Angle Measurement Device. Any device, such as a protractor with indicator, to measure the yaw angle to within ±1° when the 3-D probe is rotated from a reference position.

2.3 Differential Pressure Gauges. Airdata Multimeter, or equivalent, capable of reading pressures to within ±0.0001 inch of water or capable of measuring pressure differentials to ±2 percent. The differential pressure gauge must have calibration traceable to the National Institute of Standards and Technology (NIST) standards.

2.4 Temperature Gauge. A thermocouple, liquid-filled bulb thermometer, bimetallic thermometer, mercury-in-glass thermometer, or other gauge, capable of measuring temperature to within ±5°F of the stack temperature shall be used.

2.4.1 The temperature gauge shall be attached to the 3-D probe such that the sensor tip does not touch any metal; the gauge shall be in an interference-free arrangement with respect to the pitot tube face openings. Such an arrangement is one where the sensor is located downstream and at least 0.5 inch to the rear of the 3-D pitot head.

2.4.2 Alternative positions may be used if the 3-D probe-temperature gauge system is calibrated according to the procedure in section 4.

2.4.3 If a difference of not more than 1 percent in the average velocity measurement is introduced, the temperature gauge need not be attached to the 3-D probe; this alternative is subject to the approval of the Administrator.

2.5 Pressure Probe and Gauge. A piezometer tube and mercury- or water-filled U-tube manometer capable of measuring gauge stack pressure (P_{sg}) to within ±0.1 in. Hg is used. The static tap of a standard type pitot tube or the pressure reading from P_2 or P_3 of the 3-D pitot is acceptable.

2.6 Barometer. A mercury, aneroid, or other barometer capable of measuring atmospheric pressure to ±0.1 in. Hg may be used. In many cases, the barometric reading may be obtained from a nearby National Weather Service station, in which case the station value (which is the absolute barometric pressure) shall be requested and an adjustment for elevation differences between the weather station and the sampling point shall be

applied at a rate of minus 0.1 in. Hg per 100-foot elevation increase or vice-versa for elevation decrease.

2.7 Gas Density Determination Equipment. Method 3 equipment, if needed (see section 3.3.3) to determine the stack gas dry molecular weight, and Reference Method 4 or Method 5 equipment for moisture content determination; other methods may be used subject to the approval of the Administrator.

2.8 Calibration Pitot Tube. When calibration of the 3-D probe is necessary (see section 4), a standard pitot tube is used as a reference. The standard pitot tube shall have a known coefficient, obtained either (1) directly from NIST, Route 270, Quince Orchard Road, Gaithersburg, Maryland, or (2) by calibration against another standard pitot tube with an NBS-traceable coefficient.

3. Procedure

3.1 Traverse Points and Acceptance Criteria. The applicable criteria should depend on the purpose for doing the 3-D measurements and the accuracy desired.

3.1.1 Using Type S Pitot. The results of the 3-D measurements may be used to evaluate the acceptability of the use of a Type S pitot tube. At least 16 traverse points are sufficient for this evaluation. The Type S pitot should be used only when the yaw angles are within ±10° and the pitch angles are within zero and +10°. No more than 10 percent (or two, whichever is greater) of the measurements should exceed the respective limits, but none should exceed 20°. A 10° angle corresponds to about 1.5 percent error in axial velocity.

3.1.2 Axial Velocity. The 3-D pitot tube can be used for determining the axial velocity. At least 16 traverse points are sufficient for this determination. Using the log differential approach and the estimate of F_2 = ±3 percent and pressure differentials being measured to within ±2 percent, the 3-D probe is expected to provide resultant velocity determinations to within ±3.2 percent at each traverse point for pitch angles between ±40°. The effect of these errors in the axial velocity is a function of the resultant angle at each measurement point. The average resultant angle should be $\leq$ 30° and no more than 10 percent (or two, whichever is greater) of the measurements should exceed ±40°.

3.1.3 Flow Profiling. For flow profiling studies, at least 40 traverse points (42 for rectangular ducts) should be used. Between ±40°, pitch and yaw angles can be expected to be within ±2°. Outside of ±40°, the uncertainty in the measurements will be higher than ±2°; the confidence in measurements depends on the accuracy of the calibration curve and the number of repetitions made at these angles. The acceptability of the location also depends on the type of CFRM (principle of operation, i.e., how the CFRM responds to nonaxial flow components) being installed on the source.

3.2 3-D Measurements.

3.2.1 Prepare the 3-D probe and differential pressure gauges as recommended by the manufacturer. Capillary tubing or surge tanks may be used to dampen pressure fluctuations. It is recommended, but not required, that a pretest leak check be conducted. To perform a leak check, pressurize or use suction on the impact (P_1) opening until a reading of at least 3 in. H_2O (or the maximum reading on the gauge if less than 3 in.) registers on the differential pressure gauge, then plug the impact opening; this procedure checks the P_1 and P_2 continuity. The pressure of a leak-free system will remain stable for at least 15 seconds. Check the P_2 and P_3 continuity and the P_4 and P_5 continuity in a similar fashion. ***Note***: This procedure will not work with the Airdata meter; either a surge tank or another gauge such as the Magnehelic or inclined manometer must be temporarily installed during this leak check. Other leak-check procedures, subject to the approval of the Administrator, may be used.

3.2.2 Position the probe at the appropriate locations in the gas stream, and rotate until zero deflection is indicated by the yaw angle pressure gauge. Using a protractor or other angle measuring device, determine the degree of rotation from the stack or duct axis. Record this reading as the yaw angle.

3.2.3 Holding the null reading position, read and record the pressure gauge readings for the pitch angle ($P_4 - P_5$) and the impact pressure reading ($P_1 - P_2$).

3.2.4 Calculate $F_1 = (P_4 - P_5)/(P_1 - P_2)$ and determine the pitch angle from the F_1 vs. pitch angle calibration curve. Determine $F_2 = C_{ps}\,[(P_t - P_s)/(P_1 - P_2)]^{1/2}$ from the F_2 calibration curve vs. pitch angle calibration curve. The F_2 value is used to calculate the axial velocity.

3.2.5 Repeat this procedure for each measurement point. Record all necessary data as shown in the example field data sheet (Figure 2F-3).

Figure 2F-3. Example 3-Dimensional Velocity Traverse Data

Run Number _____ Probe I.D. _____

Client _____

Plant _____ Date _____

Address _____ Start Time _____

Location _____ Finish Time _____

Duct Dimensions _____ Personnel _____

Barometric Pressure, In. Hg _____ Static Pressure, In. H_2O _____

Point	Yaw Angle Deg	$P_4 - P_5$, In. H_2O	$P_1 - P_2$	Stack Temp. °F

Point	Yaw Angle Deg.	$P_4 - P_5$, In. H_2O	$P_1 - P_2$	Stack Temp. °F

Yaw and pitch angles are defined as follows, from the point of view of the tester looking through the sample port:

Positive yaw angles are clockwise, Positive pitch angles are towards the tester.

3.2.6 Periodically check for plugging by noting the responses to the Magnehelic gauge and pressure differential readouts. Rotate and tilt the 3-D probe to determine whether the gauge or readouts respond in the expected direction. Plugging causes erratic results or cause sluggish responses. For these checks, it is helpful to have Magnehelic gauges connected in parallel with the differential pressure meter (section 2.3). These gauges also serve as a cross-check of the differential pressure readings.

3.2.7 Conduct a post-test leak-check (required) as described in section 3.2.1. If the criteria for a leak-free system are not met, repair the equipment, and repeat the flow angle measurements.

3.3 Gas Density.

3.3.1 Record the temperature at each measurement point.

3.3.2 Record the atmospheric pressure and the stack gauge pressure reading P_{sg}. This reading may be obtained using a static pressure probe or from the P_2 - P_{bar} reading. One reading per test run is usually sufficient. The absolute stack pressure would be $P_s = P_{bar} + P_{sg}/13.6$, where P_{sg} is in inches H_2O and P_s and P_{bar} are in inches Hg.

3.3.3 Determine the stack gas dry molecular weight. For combustion processes or processes that emit essentially CO_2, O_2, CO, and N_2, use Method 3. For processes emitting essentially air, an analysis need not be conducted; use a dry molecular weight of 29.0. For other processes, other methods, subject to the approval of the Administrator, must be used.

3.3.4. Obtain the moisture content from Reference Method 4 (or equivalent) or from Method 5.

3.4 Cross-Sectional Area. Determine the cross-sectional area of the stack or duct at the sampling location. Whenever possible, physically measure the stack dimensions rather than using blueprints.

3.5 Equations.

3.5.1 Use Equation 2F-1 to calculate the resultant angles at each of the measurement points.

3.5.2 Use Equation 2F-2 to calculate the axial velocity at each of the measurement points.

3.5.2 Use Equation 2F-3 to calculate the average resultant angle and average axial velocity.

4. Calibration

4.1 Calibration Flow System.

4.1.1 The flowing gas stream must be confined to a duct of definite cross-sectional area, either circular or rectangular. For circular cross-sections, the minimum duct diameter shall be 12 inches; for rectangular cross-sections, the width (shorter side) shall be at least 10 inches.

4.1.2 The cross-sectional area of the calibration duct must be constant over a distance of 10 or more duct diameters (see section 4.1.3 for an exception). For a rectangular cross-section, use an equivalent diameter, calculated from the following equation, to determine the number of duct diameters:

$$D_e = \frac{2\,L\,W}{(L + W)}$$

where:

D_e = Equivalent diameter
L = Length
W = Width

4.1.3 To ensure the presence of stable, fully developed, axial flow patterns at the calibration site, or "test section," the site must be located at least eight diameters downstream and two diameters upstream from the nearest disturbances. The eight- and two-diameter criteria as well as the constancy of the cross-sectional area are not absolute; other test section locations may be used (subject to approval of the Administrator), provided that the flow at the test site is stable and demonstrably parallel to the duct axis. Straightening vanes or screens are highly recommended to develop axial flow.

4.1.4 The flow system shall have the capacity to generate two test-section velocities: one between 20 and 40 fps and one between 40 and 60 fps. The velocities must be constant with time to guarantee steady flow during calibration.

4.1.4.1 Cut two entry ports in the test section 180° apart. One of the ports should have an elongated slot parallel to the axis of the duct at the test section and of sufficient length to allow measurement of pitch angles to within ±1° while positioning the pitot head at the test-section centroid. To facilitate alignment of the directional probe during calibration, the test section should be constructed of plexiglass or some other transparent material. All calibration measurements should be made at the same point in the test section, preferably at the centroid of the test-section, or in a finite area where there is no velocity stratification.

4.1.4.2 To ensure that the gas flow is parallel to the central axis of the test section, use the manufacturer's calibration curve and determine each yaw angle and each pitch angle from both sides. Each yaw and pitch angle must agree within ±2° of 0°. Disagreement indicates either unacceptable flow in the test section or improper design of the 3-D pitot

tube. Conduct this measurement at several points to ensure fully developed, axial flow patterns.

4.2 Yaw Angle Calibration. This calibration is to ensure that when the 3-D probe is in the zero or null position, the 3-D probe is actually pointing directly into the flow. This calibration procedure requires an axial flow direction (see section 4.1.4.2).

4.2.1 Set up the 3-D probe to indicate the zero or null yaw position of the probe. This may be accomplished by inserting the 3-D probe into a square tube and aligning the face of the P_1 opening parallel (or vertical, depending on the direction of flow) to the face of the square duct to be used as the reference for the yaw angle measurement. A carpenter's level is helpful in making this alignment. The yaw angle reference indicator should read 0° when the 3-D probe is properly set up.

4.2.2 To determine the calibration accuracy of the measurements of the yaw angle, only the zero or null position needs be checked as follows. Set up the yaw angle indicator on the 3-D probe. Place the 3-D probe in the test section such that the 3-D head is pointing directly into the flow. The yaw angle indicator should read 0° or within ±2° of 0°. Repeat this check at any other points along the length of the probe where yaw angle measurements could be read in order to account for variations in the square tube used to indicate 3–D probe head positions.

4.3 Pitch Angle and Velocity Pressure Calibrations. The pitch angle calibration involves generating a calibration curve of F_1 or $(P_4 - P_5)/(P_1 - P_2)$ readings against known pitch angles (see Figure 2F-4 for an example calibration curve). The velocity pressure calibration involves generating a calibration curve of the 3-D pitot coefficient F_2 or $C_{ps}\,[(P_t - P_s)/(P_1 - P_2)]^{1/2}$ against known pitch angles (see also Figure 2F-4), where C_{ps} is the standard pitot tube coefficient. An example calibration data sheet is provided in Figure 2F–5.

4.3.1 Place the standard pitot tube through the unused port hole at a location that yields the same velocity pressure as the 3-D probe. Make three measurements each at the standard pitot tube location and the 3-D probe location using the standard pitot tube. Alternate the measurements between the two positions. The average must agree to within ±0.7 percent of the average velocity pressure. If the selected location for the standard pitot tube is acceptable, use this location to determine $(P_t - P_s)$.

4.3.2 Set up the protractor or other angle measurement device to establish the pitch angles to within ±1°. Record the barometric pressure to within ±0.1 in. Hg.

4.3.3 Place the 3 –D probe at 0° pitch. Null the 3-D probe for yaw, then obtain readings of $(P_1 - P_2)$ and $(P_4 - P_5)$. After taking these readings, ensure that the 3-D probe remained at null conditions.

4.3.4 Repeat step 4.3.3 in 5° increments for angles from –60° to +60°. Perform the calibration at both 30 fps and 50 fps. At ±35° through ±60°, run duplicate runs. Average the F_1 ratios and the F_2 ratios obtained

for each pitch angle in the two flow ranges, and plot a calibration curve with the average values versus the pitch angle. Draw a smooth line through the data points.

4.3.5 For each individual measured F_1 data values at both velocities, determine the angles and the corresponding F_2 values from the smoothed-out calibration curve. Determine the differences from the actual measured angles and F_2 values. For F_1, the difference at each comparison must be within ±2° for angles between 0° and 40°. For F_2 values, the difference should not exceed ±3.0 percent from the F_2 ratio at the same pitch angle.

4.3.6 This calibration curve should apply to a velocity range of about 20 fps to 100 fps for pitch angles between ±40°. If measurements are conducted below 20 fps, a separate calibration curve should be generated at 10 fps or as close as possible to the actual measurement level. In addition, if the specification in section 4.3.4 cannot be met, consideration should be given to limiting the applicability of the calibration curve to a finite velocity range over which measurements can be obtained within the specifications.

4.4 Recalibration of 3-D Pitot Tube. Conduct a calibration check at least annually, unless there is visible damage to the 3-D head, at 30 fps. Check the yaw angle. Check the F_1 and F_2 calibrations at 0°, +40°, and -40°. Pitch angles should agree within ±2° at each pitch angle and F_2 readings should agree to within ±3 percent.

4.5 Differential Pressure Meter. Recalibrate this meter at least annually against a NIST traceable reference meter. Readings should agree to within ±2 percent.

4.6 Temperature Gauges and Barometer. Same as that in Method 2, sections 4.3 and 4.4, except the temperature should agree within ±5°F.

5. Calculations

Carry out calculations, retaining at least one extra decimal figure beyond that of the acquired data. Round off figures after final calculation.

5.1 Resultant Angle. The resultant angle at each measurement point is calculated from the yaw and pitch angles as follows:

$$R_i = \text{arc cosine}\,[(\text{cosine } Y_i)\,(\text{cosine } P_i)] \qquad \text{Eq. 2F-1}$$

where:

R_i = Resultant angle at traverse point i, degree.
Y_i = Yaw angle at traverse point i, degree.
P_i = Pitch angle at traverse point i, degree.

5.2 Axial Velocity. The axial velocity at each traverse point is calculated from the yaw and pitch angles as follows:

$$v_i = F_2 K_p \sqrt{\frac{T_i (P_1 - P_2)}{P_s M_s}} (\cos Y_i)(\cos P_i) \qquad \text{Eq. 2F-2}$$

where:

v_i = Velocity at point i, fps
K_p = Conversion factor
= 85.49 (fps){[(lb/lb-mole)(in. Hg)]/[(°R)(in. H_2O)]}$^{1/2}$
T_i = Absolute temperature at point i, °R
$P_1 - P_2$ = Pressure differential from 3-D probe, in. H_2O
P_s = Absolute stack pressure, in. Hg
= $P_{bar} + P_{sg}/13.6$
P_{bar} = Barometric pressure, in. Hg
P_{sg} = Stack gauge pressure, in. H_2O
M_s = Molecular weight of stack gas, lb/lb-mole
F_2 = 3-D pitot coefficient, C_{ps} $[(P_t - P_s)/(P_1 - P_2)]^{1/2}$
$P_t - P_s$ = Velocity pressure from standard type pitot, in. H_2O
C_{ps} = Standard pitot tube coefficient

5.3 Average Resultant Angle or Axial Velocity. The average resultant angle or axial velocity is calculated as follows:

$$X_{avg} = \frac{\sum_{i=1}^{n} X_i}{n} \qquad \text{Eq. 2F-3}$$

where:

X_{avg} = Average resultant or axial stack gas velocity, deg or fps.
X_i = Resultant or velocity at point i, deg or fps.
n = Number of traverse points.

5.4 Average Stack Gas Dry Volumetric Flow Rate. See Method 2, section 5.3.

6. Bibliography

1. Method 1, "Sample and Velocity Traverses for Stationary Sources," 40 CFR Part 60, Appendix A, Revised as of July 1, 1992.

2. R.T. Shigehara, W.F. Todd, and W.S. Smith, "Significance of Errors in Stack Sampling Measurements." Presented at the Annual Meeting of the Air Pollution Control Association, St. Louis, Missouri, June 14–19, 1970.

3. J.J. Page, E.A. Potts, and R.T. Shigehara, "3-D Pitot Tube Calibration Study, EPA Contract No. 68–D1–0009, Work Assignment No. I-121, March 11, 1993.