PREFACE

Rule 3745-17-08 of the Ohio Administrative Code gives examples of reasonably available control measures (RACM) which should be employed for various types of fugitive dust sources. The rule covers a large number of diverse types of sources and, of necessity, is written in general terms.

The burden of developing an acceptable control program, which will meet the requirements of this rule and result in the use of reasonably available control technology (RACT) for one or more fugitive dust sources, lies with the owner/operator of the source(s). The type of control measures which are presently used by industry throughout the nation and which would constitute RACT for specific sources can, in general, be easily discerned by researching available environmental control publications and literature.

The Office of Air Pollution Control (OAPC) realizes that Ohio industry will need assistance in developing acceptable control programs and that the Agency's field office personnel will need assistance or guidance in reviewing those programs. This document has been prepared to specifically address those needs.

The OAPC would like to emphasize that the definitions of RACT in this document for the various types of fugitive dust sources are not "cast in concrete". Deviations from the general definitions or recommendations will be permitted based upon source-specific considerations; however, as stated earlier, the burden will be upon the owner/operator of an affected facility to demonstrate that the proposed, overall control program constitutes RACT and meets the requirements of rule 3745-17-08.

ACKNOWLEDGEMENTS

The Office of Air Pollution Control (OAPC) project team extends its sincere appreciation to the many individuals and organizations that participated in the development of this document. The participants included representatives of industries, associations, private contracting and consulting firms, and federal, state and local air pollution control agencies. Their input and assistance was obtained from responses to the OAPC's initial questionnaire/survey, telephone communications, written comments and plant tours. Because of the large number of participants, it is impossible to acknowledge all of them in this document.

The project team would, however, like to give special recognition to PEDCo Environmental who prepared the drafts for Sections 1.0 through 2.16. Mr. George A. Jutze served as Project Director, and Mr. John M. Zoller was the Project Manager. The Senior Advisor was Mr. Jack A. Wunderle, and Mr. J.L. Zieleniewski was in charge of Library Resources. Additional authors of the above-mentioned draft sections of the document were Lawrence L. Gibbs, D.J. Loudin, E.A. Pfetzing and L.J. Ungers.

The OAPC, Division of Engineering project team was responsible for the preparation of the complete, final document. Revisions were made by the project team to the draft sections prepared by PEDCo. In addition, the project team prepared the entirety of Sections 2.17 thru 2.30. Mr. James A. Orlemann, Division Chief, served as the Project Officer. He was assisted by Mr. Thomas J. Kalman, Engineering Operations Section Chief, and Mssrs. James A. Cummings and Edwin Y. Lim, Environmental Scientists.

Finally, special recognition is also owed to Mrs. Joyce Scales Ellis, Secretary for the Division of Engineering, for her tremendous work in typing this document.

CONTENTS

	Page
Figures	iii
Tables	xi
1.0 Introduction	1-1
2.0 Reasonably Available Control Measures (RACM)	2-1
2.1 General Fugitive Dust Sources	2-3
2.1.1 Plant Roadways and Parking Areas	2-6
2.1.2 Aggregate Storage Piles	2-26
2.1.3 Material Handling	2-53
2.1.4 Mineral Extraction	2-65
2.2 Iron and Steel Mills	2-93
2.2.1 Coke Manufacturing	2-93
2.2.2 Iron Production	2-113
2.2.3 Steel Manufacture	2-134
2.3 Lime Plants	2-154
2.4 Power Plants	2-172
2.5 Grain Terminals	2-184
2.6 Country Grain Elevators	2-203
2.7 Iron Foundries	2-214
2.8 Steel Foundries	2-232
2.9 Glass Manufacturing Plants	2-242
2.10 Fiberglass Manufacturing	2-257
2.11 Secondary Aluminum Processing Plants	2-266
2.12 Fertilizer Mixing/Blending Plants	2-277
2.13 Cement Manufacturing and Blending Plants	2-289

CONTENTS (continued)

		Page
2.14	Ferroalloy Production	2-306
2.15	Metal Salvage Operations	2-320
2.16	Pulp and Paper Mills	2-329
2.17	Woodworking Operations	2-337
2.18	Aggregate Processing Plants	2-358
2.19	Coal Processing Plants	2-403
2.20	Brick and Related Clay Product Manufacturing Plants	2-445
2.21	Asphaltic Concrete Plants	2-459
2.22	Concrete Batching Plants	2-471
2.23	Sandblasting Operations	2-490
2.24	Petroleum Refineries	2-505
2.25	Agricultural Chemical Manufacturing Plants	2-513
2.26	Bulk Gasoline Terminals and Plants	2-524
2.27	Carbon Black Plants	2-532
2.28	Municipal Incineration	2-541
2.29	Salt Processing Operations	2-560
2.30	Galvanizing Plants	2-572
Appendix A:	Cost Estimation Guidelines for RACM for Fugitive Dust	A-1
Appendix B:	Listing of Chemical Dust Suppressants	B-1

FIGURES

Number		Page
2.1-1	Order and Location of General Fugitive Dust Sources in a Hypothetical Industrial Setting	2-4
2.1-2	Order and Location of General Fugitive Dust Sources in Hypothetical Mineral Mining Operation	2-5
2.1.2-1	Thornthwaite Precipitation-Evaporation (PE) Indices for the State of Ohio	2-28
2.1.2-2	Mean Number of Dry Days (Less Than 0.01 Inch of Precipitation) in the State of Ohio	2-36
2.1.3-1	Typical Materials Handling Operation	2-54
2.1.4-1	Overburden Removal Operations for Area and Contour Strip Mining	2-69
2.1.4-2	Climatic Factors for Use in the Wind Erosion Equation	2-81
2.2.1-1	Process Flow Diagram of Coke Manufacturing and Associated Fugitive Particulate Emission Sources	2-96
2.2.2-1	Blast Furnace Cross Section	2-113a
2.2.2-2	Blast Furnace Plant With Auxiliary Equipment	2-113b
2.2.2-3	Simplified Process Flow Diagram of Iron Production and Associated Fugitive Particulate Emission Sources	2-116
2.2.3-1	Cross-Section of an Open-Hearth Furnace	2-135a
2.2.3-2	Cross-Section of a Basic Oxygen Furnace	2-135b
2.2.3-3	Cross-Section of an Electric Arc Furnace	2-136a
2.2.3-4	Simplified Process Flow Diagram for Steel Manufacture and Associated Fugitive Particulate Emission Sources	2-139
2.2.3-5	BOF Total Furnace Enclosure System	2-143a
2.2.3-6	BOF Canopy Hood System	2-144a
2.2.3-7	Electric Furnace Building Evacuation System	2-145a

FIGURES (continued)

Number		Page
2.2.3-8	Electric Furnace Canopy Hood System	2-145b
2.3-1	Process Flow Diagram and Fugitive Emission Sources for Lime Manufacturing	2-155
2.3-2	Wet Dust Suppression System Applied on a Lime Plant	2-167
2.4-1	Simplified Process Flow Diagram of Coal-Fired Power Plants and Associated Fugitive Particulate Emission Sources	2-173
2.4-2	Wet Dust Suppression System Applied on a Coal-Fired Power Plant	2-181a
2.5-1	Simplified Process Flow Diagram for Grain Terminals and Associated Fugitive Particulate Emission Sources	2-185
2.5-2	Grain Terminal Elevator	2-185a
2.5-3	Truck Unloading	2-185b
2.5-4	Railcar Unloading	2-185c
2.5-5	Grain Cleaning Equipment	2-186a
2.5-6	Rack and Column Grain Dryers	2-186b
2.5-7	Railcar and Truck Loading	2-187a
2.5-8	Barge and Ship Loading	2-187b
2.5-9	Truck Unloading Control System	2-191a
2.5-10	Railcar Unloading Control System	2-192a
2.5-11	Boxcar Unloading Control System	2-192b
2.5-12	Barge Loading Control System	2-193a
2.5-13	Elevator Leg Control System	2-193b
2.5-14	Transfer Point Control System	2-193c
2.5-15	Grain Handling and Cleaning Control System	2-193d

FIGURES (continued)

Number		Page
2.5-16	Rack Dryer with Screen Filter	2-194a
2.5-17	Truck Loading Control System	2-194b
2.5-18	Boxcar Loading Control System	2-194c
2.5-19	Hopper Car Loading Control System	2-195a
2.5-20	Barge or Ship Loading Control System	2-195b
2.6-1	Simplified Process Flow Diagram for Country Grain Elevators and Associated Fugitive Particulate Emission Sources	2-204
2.6-2	Diagram of an Upright Country Grain Elevator	2-204a
2.7-1	Simplified Process Flow Diagram for Iron Foundries and Associated Fugitive Particulate Emission Sources	2-215
2.7-2	Iron Foundry Process Flow Diagram	2-215a
2.7-3	Cupola Furnace	2-215b
2.7-4	Electric Arc Furnace	2-216a
2.7-5	Channel Electric Induction Furnace	2-216b
2.7-6	Coreless Electric Induction Furnace	2-216c
2.7-7	Reverberatory Furnace	2-216d
2.7-8	Magnesium Treatment Methods for Producing Ductile Iron	2-216e
2.7-9	Sand Muller	2-217a
2.7-10	Building Evacuation System	2-223a
2.7-11	Mobile Tapping Hoods	2-223b
2.7-12	Hooded Pouring Station	2-224a
2.7-13	Movable Pouring Hood	2-224b
2.7-14	A Casting Shakeout Control System	2-224c
2.7-15	Capture Design for a Typical Sand-Handling System	2-224e

FIGURES (continued)

Number		Page
2.8-1	Simplified Process Flow Diagram for Steel Foundries and Associated Fugitive Particulate Emission Sources	2-233
2.9-1	Simplified Process Flow Diagram for Manufacture of Soda-Lime Glass and Associated Fugitive Particulate Emission Sources	2-243
2.9-2	Side-Port Continuous Regenerative Furnace	2-245
2.9-3	End-Port Continuous Regenerative Furnace	2-246
2.10-1	Simplified Process Flow Diagram of Fiberglass Manufacture and Associated Fugitive Particulate Emission Sources	2-258
2.11-1	Simplified Process Flow Diagram for Secondary Aluminum Processing Plants and Associated Fugitive Particulate Emission Sources	2-267
2.12-1	Typical Flow Diagram for Fertilizer Mixing/ Blending Facilities and Associate Fugitive Particulate Emission Sources	2-278
2.12-2	Bulk Loading Station With Elevated Storage Used in Fertilizer Mixing/Blending Plants	2-280
2.12-3	A Bulk Blending Plant With Fugitive Dust Emission Controls Consisting of Skirts Around Railcar Unloading and a Series of Hoods Ducted to a Fabric Filter	2-283a
2.12-4	Dust Suppressant Application System	2-283b
2.12-5	Bucket Elevators Used at Bulk Blending Plants	2-286a
2.13-1	Typical Rotary Ball Mill Configuration	2-292
2.13-2	Simplified Process Flow Diagram for Portland Cement Production and Associated Fugitive Particulate Emission Sources	2-293
2.14-1	Simplified Process Flow Diagram for Ferroalloy Production and Associated Fugitive Particulate Emission Sources	2-307
2.14-2	Submerged-Arc Furnace for Ferroalloy Production	2-309
2.15-1	Process Schematic for Metal Salvage/Auto Shredding Illustrating Potential Fugitive Particulate Emission Points	2-321

FIGURES (continued)

Number		Page
2.16-1	Simplified Process Flow Diagram for Raw Material Preparation for Wood Pulping Processes at Pulp and Paper Mills, and Associated Fugitive Particulate Emission Sources	2-330
2.16-2	Typical Kraft Sulfate Pulping and Recovery Process	2-332
2.17-1	Cross-Section of a Typical Wood Hogging Machine	2-341
2.17-2	Simplified Process Flow Diagram for Wood-working Operations at Several Wood Product Manufacturing Plants and Associated Fugitive Particulate Emission Sources	2-342
2.17-3	Cement-Receiving and Storage System	2-350
2.18-1	Simplified Process Flow Diagram for Sand and Gravel Processing Plants and Associated Fugitive Particulate Emission Sources	2-360
2.18-2	Simplified Process Flow Diagram for Crushed Stone Processing and Associated Fugitive Particulate Emission Sources	2-361
2.18-3	Simplified Process Flow Diagram for Slag Processing and Associated Fugitive Particulate Emission Sources	2-362
2.18-4	Double-Toggle Jaw Crusher	2-366
2.18-5	Single-Toggle Jaw Crusher	2-367
2.18-6	Pivoted-Spindle Gyratory Crusher	2-368
2.18-7	Cone Gyratory Crusher	2-368
2.18-8	Single-Roll Crusher	2-369
2.18-9	Double-Roll Crusher	2-370
2.18-10	Hammermill Crusher	2-370
2.18-11	Impact Crusher	2-371
2.18-12	Vibrating Grizzly	2-372
2.18-13	Vibrating Screen	2-372
2.18-14	Belt Conveyor Transfer Point	2-374
2.18-15	Types of Bucket Elevators	2-375

FIGURES (continued)

Number		Page
2.18-16	Wet Dust-Suppression System	2-385
2.18-17	Wet Dust-Suppression Application at a Crusher Discharge Point	2-387
2.18-18	Hood Configuration for a Transfer Point Having a Free-Fall Distance Less Than 3 Feet	2-388
2.18-19	Hooding Configuration for a Transfer Point Having a Free-Fall Distance Greater Than 3 Feet	2-389
2.18-20	A Combination Control System Consisting of Wet Suppression and Dry Collection	2-390
2.19-1	Simplified Process Flow Diagram for Coal Processing Plants and Associated Fugitive Particulate Emission Sources	2-405
2.19-2	A Coal Sizing Circuit at a Coal Preparation Plant	2-408
2.19-3	Rotary Breaker	2-409
2.19-4	Hammermill	2-410
2.19-5	Single-Roll Coal Crusher	2-411
2.19-6	Double-Roll Coal Crusher	2-411
2.19-7	Ring Coal Crusher	2-411
2.19-8	Pneumatic Cleaning Circuit	2-414
2.19-9	Air Table	2-415
2.19-10	Jig-Table Cleaning Circuit	2-416
2.19-11	Air-Pulsated Jig	2-417
2.19-12	Deister Table	2-417
2.19-13	Heavy-Media Cleaning Circuit	2-419
2.19-14	Heavy-Media Cyclone	2-420
2.19-15	Water Clarification Circuit	2-421
2.19-16	Froth Flotation Unit	2-423
2.19-17	Screen-Type Thermal Coal Dryer	2-425
2.18-18	Cascade Thermal Coal Dryer	2-425

FIGURES (continued)

Number		Page
2.19-19	Flash or Suspension Thermal Coal Dryer	2426
2.19-20	Multilouver Thermal Coal Dryer	2-427
2.19-21	Fluidized Bed Thermal Coal Dryer	2-428
2.20-1	Tunnel Kiln	2-448
2.20-2	Periodic Kiln	2-450
2.20-3	Simplified Process Flow Diagram for Brick and Related Clay Product Manufacturing Plants and Associated Fugitive Particulate Emission Sources	2-451
2.21-1	Simplified Process Flow Diagram for a Continuous Hot-Mix Asphaltic Concrete Plant and Associated Fugitive Particulate Emission Sources	2-460
2.21-2	Simplified Process Flow Diagram for a Batch Hot-Mix Asphaltic Concrete Plant and Associated Fugitive Particulate Emission Sources	2-461
2.21-3	Simplified Process Flow Diagram for a Dryer-Drum Asphaltic Concrete Manufacturing Plant and Associated Fugitive Particulate Emission Sources	2-463
2.22-1	Simplified Process Flow Diagram for Concrete Batching and Associated Fugitive Particulate Emission Sources	2-473
2.22-2	Cement-Receiving and Storage System	2-478
2.22-3	An Adjustable Gathering Hopper	2-481
2.23-1	Suction Blast Method	2-491
2.23-2	Direct Blast Method	2-492
2.23-3	Simplified Process Flow Diagram for Sandblasting and Associated Fugitive Particulate Emission Sources	2-494
2.23-4	Wet Blast Adaptor	2-499
2.24-1	Simplified Process Flow Diagram for Petroleum Refineries	2-506

FIGURES (continued)

Number		Page
2.25-1	Simplified Process Flow Diagram of the Urea Manufacturing Process and Associated Fugitive Particulate Emission Sources	2-515
2.26-1	Simplified Process Flow Diagram for Bulk Gasoline Distribution and Storage and Associated Fugitive Particulate Emission Sources	2-526
2.26-2	Simplified Process Flow Diagram for Bulk Gasoline Storage	2-527
2.26-3	Splash Loading Method	2-528
2.26-4	Submerged Fill Pipe	2-529
2.26-5	Bottom Fill Loading	2-530
2.27-1	Simplified Process Flow Diagram for Carbon Black Plants and Associated Fugitive Particulate Emission Sources	2-535
2.28-1	Simplified Process Flow Diagram of a Municipal Incinerator and Associated Fugitive Particulate Emission Sources	2-542
2.29-1	Simplified Process Flow Diagram for Salt Processing Operations and Associated Fugitive Particulate Emission Sources	2-563
2.30-1	Simplified Process Flow Diagram for Galvanizing Plants and Associated Fugitive Particulate Emission Sources	2-573

TABLES

Number		Page
2.1.1-1	Emission Factors for Vehicles Travelling Paved Surfaces	2-9
2.1.1-2	Typical Size Distribution of Fugitive Dust Particles by Surface Type	2-11
2.1.1-3	Summary of Techniques, Efficiencies and Costs for Controlling Fugitive Dust from Paved and Unpaved Surfaces	2-16
2.1.1-4	Contract Cost Estimates for Oiling Unpaved Roadways	2-19
2.1.2-1	Percent Contribution of Aggregate Storage Pile Activities Toward the Total Fugitive Emission Rate	2-29
2.1.2-2	Representative Silt Content, Moisture Content and the Duration of Storage Parameters for Specific Storage Materials	2-32
2.1.2-3	Thirty-Year Annual Wind Speed for Selected Ohio Cities	2-34
2.1.2-4	Vehicular Activity Factors	2-37
2.1.2-5	Summary of Emission Factor Equations and Correction Parameters	2-39
2.1.2-6	Typical Particulate Size Ranges for Fugitive Dust from Aggregate Storage Piles	2-40
2.1.2-7	Chemical Stabilizing Agents for Use on Aggregate Storage Piles	2-45
2.1.2-8	A Summary of Control Techniques, Efficiencies and Costs for Fugitive Dust Emissions from Aggregate Storage Piles	2-47

TABLES (continued)

Number		Page
2.1.3-1	Emission Factors for the Unloading of Material	2-56
2.1.3-2	Emission Factors for the Conveying and Transfer of Material	2-57
2.1.3-3	A Summary of Control Techniques, Efficiencies and Costs for Fugitive Emissions from Unloading, Conveying, and Transfer Operations	2-62
2.1.4-1	Mineral Mining in Ohio	2-66
2.1.4-2	Review of Fugitive Dust from Mineral Extraction Industry	2-67
2.1.4-3	Fugitive Dust Emission Factors for Overburden Removal Operations	2-72
2.1.4-4	Fugitive Dust Emission Factors for Drilling and Blasting Operations	2-75
2.1.4-5	Fugitive Dust Emission Factors for Truck Loading Operations	2-76
2.1.4-6	Fugitive Dust Emissions for Heavy Earthwork Construction Around Waste Disposal Sites	2-78
2.1.4-7	Summary of Variables for the Wind Erosion Equation	2-80
2.1.4-8	Particulate Size Distribution for Selected Mine Emission Sources	2-83
2.1.4-9	A Summary of Control Techniques, Efficiencies and Cost for Fugitive Emissions from Mineral Extraction Activities	2-90
2.2.1-1	Fugitive Dust Emission Factors for Coke Manufacturing	2-97
2.2.1-2	A Summary of the Control Alternatives, Efficiencies and Costs, and the RACM Selections for Fugitive Dust Emissions from Sources in Coke Manufacturing	2-104,105,106
2.2.2-1	Fugitive Dust Emission Factors for Iron Production	2-117,118

TABLES (continued)

Number		Page
2.2.2-2	A Summary of the Control Alternatives, Efficiencies and Costs, and the RACM Selections for Fugitive Dust Emissions from Sources in Iron Production	2-125,126, 2-127,128
2.2.3-1	Fugitive Dust Emission Factors for Steel Manufacturing	2-141
2.2.3-2	A Summary of the Control Alternatives, Efficiencies and Costs, and the RACM Selections for Fugitive Dust Emissions from Sources in Steel Manufacturing	2-147,148
2.3-1	Fugitive Dust Emission Factors for Lime Manufacturing	2-158
2.3-2	A Summary of the Control Alternatives, Efficiencies and Costs, and the RACM Selections for Fugitive Dust Emissions from Lime Plants	2-163,164,165
2.4-1	Fugitive Dust Emission Factors for Coal-Fired Power Plants	2-175
2.4-2	A Summary of the Control Alternatives, Efficiencies and Costs, and the RACM Selections for Fugitive Dust Emissions from Sources at Coal-Fired Power Plants (500 MW)	2-178,179,180
2.5-1	Fugitive Dust Emission Factors for Grain Terminals	2-188
2.5-2	Particulate Size Distribution for Dust from an Elevator Leg Cyclone (Inlet Test)	2-190
2.5-3	A Summary of the Control Alternatives, Efficiencies and Costs, and the RACM Selections for Fugitive Dust Emissions from Sources at Grain Terminals	2-196,197
2.6-1	Fugitive Dust Emission Factors for Country Grain Elevators	2-207
2.6-2	Particulate Size Distribution for Dust from an Elevator Leg Cyclone (Inlet Test)	2-209
2.6-3	A Summary of the Control Alternatives, Efficiencies and Costs, and the RACM Selections for Fugitive Dust Emissions from Sources at Country Grain Elevators	2-210,210a
2.7-1	Fugitive Dust Emission Factors for Iron Foundries	2-219

TABLES (continued)

Number		Page
2.7-2	Particulate Emission Characteristics for Various Foundry Operations	2-221,221a
2.7-3	Chemical Composition of Cupola Dust	2-221b
2.7-4	Particle Size Distribution of Dust Emissions from Both Cold and Hot Blast Cupola Furnace Stacks	2-221b
2.7-5	Size Distribution for Particulate Emissions from Eighteen Cupola Furnace Installations	2-221b
2.7-6	Chemical Analysis of Particulate Emissions from an Electric Arc Furnace	2-221c
2.7-7	Particle-Size Distribution for Particulate Emissions from Three Electric-Arc Furnace-Installations	2-221d
2.7-8	A Summary of the Control Alternatives, Efficiencies and Costs, and the RACM Selections for Fugitive Dust Emissions from Sources at Iron Foundries	2-226,227,228
2.8-1	Fugitive Dust Emission Factors for Steel Foundries	2-235
2.8-2	A Summary of the Control Alternatives, Efficiencies and Costs, and the RACM Selections for Fugitive Dust Emissions from Sources at Steel Foundries	2-237,238
2.9-1	Fugitive Dust Emission Factors for Glass Manufacturing Plants	2-249
2.9-2	A Summary of the Control Alternatives, Efficiencies and Costs, and the RACM Selections for Fugitive Dust Emissions from Sources at Glass Manufacturing Plants	2-251
2.10-1	Fugitive Dust Emission Factors for Fiberglass Manufacturing	2-260
2.10-2	A Summary of the Control Alternatives, Efficiencies and Costs, and the RACM Selections for Fugitive Dust Emissions from Sources at Fiberglass Manufacturing Plants	2-262
2.11-1	Fugitive Dust Emission Factors for Secondary Aluminum Processing Plants	2-271
2.11-2	Effluent Characteristics from Secondary Aluminum Production	2-270

TABLES (continued)

Number		Page
2.11-3	A Summary of the Control Alternatives, Efficiencies and Costs, and the RACM Selections for Fugitive Dust Emissions from Sources at Secondary Aluminum Processing Plants	2-274,274a
2.12-1	Fugitive Dust Emission Factors for Fertilizer Mixing/Blending Plants	2-282
2.12-2	A Summary of the Control Alternatives, Efficiencies and Costs, and the RACM Selections for Fugitive Dust Emissions from Sources at Fertilizer Mixing and Blending Plants	2-284,285
2.13-1	Raw Materials Used in Producing Portland Cement in the United States	2-290
2.13-2	Fugitive Dust Emission Factors for Cement Production	2-295
2.13-3	A Summary of the Control Alternatives, Efficiencies and Costs, and the RACM Selections for Fugitive Dust Emissions from Sources at Cement Manufacturing and Blending Plants	2-301,302,303
2.14-1	Fugitive Dust Emission Factors for Ferroalloy Production	2-311
2.14-2	A Summary of the Control Alternatives, Efficiencies and Costs, and the RACM Selections for Fugitive Dust Emissions from Sources at Ferroalloy Production Plants	2-314,315
2.15-1	A Summary of the Control Alternatives, Efficiencies and Costs, and the RACM Selections for Fugitive Dust Emissions from Sources at Metal Salvage Operations	2-323,324
2.17-1	Fugitive Dust Emission Factors for Woodworking Operations	2-344
2.17-2	Approximate Size Range of Typical Components of Wood Fuel	2-346
2.17-3	A Summary of the Control Alternatives, Efficiencies and Costs, and the RACM Selections for Fugitive Dust Emissions from Sources in Woodworking Operations	2-352,353,354
2.18-1	Fugitive Dust Emission Factors for Aggregate Processing Plants	2-378,379
2.18-2	A Summary of the Control Alternatives, Efficiencies and Costs, and the RACM Selections for Fugitive Dust Emissions from Aggregate Processing Plants	2-395,396,397

TABLES (continued)

Number		Page
2.19-1	Coal Size Ranges for Cleaning Equipment	2-412
2.19-2	Fugitive Dust Emission Factors for Coal Processing Plants	2-431
2.19-3	A Summary of the Control Alternatives, Efficiencies and Costs, and the RACM Selections for Fugitive Dust Emissions from Coal Processing Plants	2-437,438,439,440
2.20-1	Fugitive Dust Emission Factors for Brick and Related Clay Product Manufacturing Plants	2-453
2.20-2	A Summary of the Control Alternatives, Efficiencies and Costs, and the RACM Selections for Fugitive Dust Emissions from Brick and Related Clay Product Manufacturing Plants	2-456
2.21-1	Fugitive Dust Emission Factors for Asphaltic Concrete Manufacturing	2-465
2.22-1	Fugitive Dust Emission Factors for Concrete Batching Plants	2-474
2.22-2	Physical Characteristics of Three Common Grades of Cement	2-475
2.22-3	A Summary of the Control Alternatives, Efficiencies and Costs, and the RACM Selections for Fugitive Dust Emissions from Concrete Batching Plants	2-484,485,486
2.23-1	Fugitive Dust Emission Factors for Sandblasting Operations	2-495
2.23-2	Typical Size Distribution of Fugitive Dust Particles as a Result of Sandblasting	2-496
2.23-3	A Summary of the Control Alternatives, Efficiencies and Costs, and the RACM Selections for Fugitive Dust Emissions from Sandblasting Operations	2-501
2.25-1	Fugitive Dust Emission Factors for Urea Manufacturing	2-518
2.25-2	A Summary of the Control Alternatives, Efficiencies and Costs, and the RACM Selections for Fugitive Dust Emissions from Agricultural Chemical Manufacturing Plants	2-521

TABLES (continued)

Number		Page
2.27-1	A Summary of the Control Alternatives, Efficiencies and Costs, and the RACM Selections for Fugitive Dust Emissions from Carbon Black Plants	2-538
2.28-1	Fugitive Dust Emission Factors for Municipal Incineration	2-545
2.28-2	Range in Composition of Residential Solid Wastes in 21 U.S. Cities	2-547
2.28-3	Typical Composition of Municipal Solid Waste	2-548
2.28-4	Examples of Hazardous Wastes in Municipal Solid Waste	2-550
2.28-5	Physical Properties of Particles Leaving Furnace	2-551
2.28-6	Chemical Analysis of Flyash Samples from South Shore Incinerator, New York City, by Source	2-552
2.28-7	Spectrographic Analysis of Ashed Incinerator Particulate Matter	2-553
2.28-8	A Summary of the Control Alternatives, Efficiencies and Costs, and the RACM Selections for Fugitive Dust Emissions from Municipal Incineration	2-556
2.29-1	Specification Guidelines for Different Grades of Salt	2-561
2.29-2	A Summary of the Control Alternatives, Efficiencies and Costs, and the RACM Selections for Fugitive Dust Emissions from Salt Processing Operations	2-568,569
2.30-1	Fugitive Dust Emission Factors for Galvanizing Plants	2-577
2.30-2	Chemical Analyses of the Fumes Collected by a Baghouse and by an Electrostatic Precipitator from Zinc Galvanizing Kettles	2-579
2.30-3	A Summary of the Control Alternatives, Efficiencies and Costs, and the RACM Selections for Fugitive Dust Emissions from Sources at Galvanizing Plants	2-583

1.0 INTRODUCTION

In general, all the early State Implementation Plans (SIP's) required by the Federal Clean Air Act (CAA) explicitly and specifically addressed point source control and relied on point source reduction measures as the means of attaining the National Ambient Air Quality Standards (NAAQS) for Total Suspended Particulate (TSP). Control of fugitive dust emissions was only cursorily addressed in these plans--generally in the form of a modified "nuisance" regulation, and was often patterned after the form presented in the Federal Register.

Widespread failure to attain the National Ambient Air Quality Standards for particulate matter in many urban areas has resulted in reexamination of the nature of the urban particulate problem. Basically, the particulate control strategy developed as part of the original SIP's included an analysis of the contribution of conventional point and area sources without much consideration of other "less conventional" sources of particulate such as industrial process fugitive emissions, material handling operations, storage piles, unpaved roads and parking lots, etc.

In light of the significant potential impact of fugitive dust emissions on the levels of suspended particulates in the ambient air, the Ohio Environmental Protection Agency (OEPA) has undertaken a program to prepare guidelines for selection of reasonably available control measures (RACM) for major manufacturing categories.

2.0 REASONABLY AVAILABLE CONTROL MEASURES (RACM)

The purpose of this report is to provide agency personnel with information on industry categories relating to potential fugitive dust problems, and available means to alleviate the problems. In accomplishing this purpose, the guideline presents detailed data on 30 industry categories. The information supplied includes a general process description of the industry; identification of fugitive dust sources; a listing of available fugitive dust emission factors; available data on particle characteristics and potential adverse impacts; data on available control techniques, their effectiveness, and costs; and selection of RACM for each emission source.

The process description is a general explanation of the process operations in which each potential fugitive emission source is identified. Available emission factors for these sources are listed along with a reliability rating for each. The reliability ratings are indicative of the supportive data used to develop the factor. The following rating system is employed:

A - Excellent - Supportable by a large number of tests, process data, and engineering analysis work.

B - Above average - Supportable by multiple tests, moderate process data, and engineering analysis work.

C - Average - Supportable by multiple tests.

D - Below average - Supportable by limited test data and engineering judgment.

E - Poor - Supportable by best engineering judgment (visual observation, emission tests for similar sources, etc.).

Available data on composition, size range, and potential environmental and/or health effects of the fugitive particles are presented to provide insight into the potential impacts of the fugitive emissions.

For each of the fugitive dust sources identified, available control measures are described. Data on the effectiveness and costs are also included. Costs in the document have been adjusted to reflect 1980 dollars as described in Appendix A. The costs are presented as an order-of-magnitude guide and should not be considered as accurate for a site-specific application.

Of the available control techniques, one is selected that exemplifies RACM. The selection is based upon technological feasibility, economic feasibility, and cost-effectiveness. The selection process was judgmental; and it should be emphasized that for retrofit applications, control characteristics are highly plant-specific and could dictate another control technique as RACM. This document provides guidelines to selecting RACM for various processes and is not meant to preclude consideration of other control measures in site-specific analyses.

2.1 GENERAL FUGITIVE DUST EMISSION SOURCES

The general fugitive dust category presents a description of those dust sources which would be common to a number of industries. These sources include fugitive dust from 1) plant roadways and parking areas, 2) aggregate storage piles, 3) material handling, and 4) mineral extraction. These four fugitive dust sources have been grouped together and treated as a separate section in order to avoid redundancy within the remainder of the text.

The location or placement of a given fugitive dust source will vary greatly within a specific industry. An example of this variability is illustrated by a conveying operation. The conveyor may be located at a number of points within the industrial process: unloading of raw material, transport from a storage facility, and movement of material within the industrial process itself. Because of the great variation in placement, it is not possible to devise a typical flow diagram for these sources. However, to give the reader of this document a feel for the possible order and location of each general fugitive dust source, two hypothetical industrial settings are provided. Figure 2.1-1 presents a hypothetical flow diagram for an unspecified industry with fugitive dust sources from 1) plant roadways and parking areas, 2) aggregate storage piles, and 3) material handling operations. Figure 2.1-2 presents another hypothetical flow diagram depicting a mineral mining operation. The fugitive dust sources illustrated in this figure are common to mineral extraction operations.

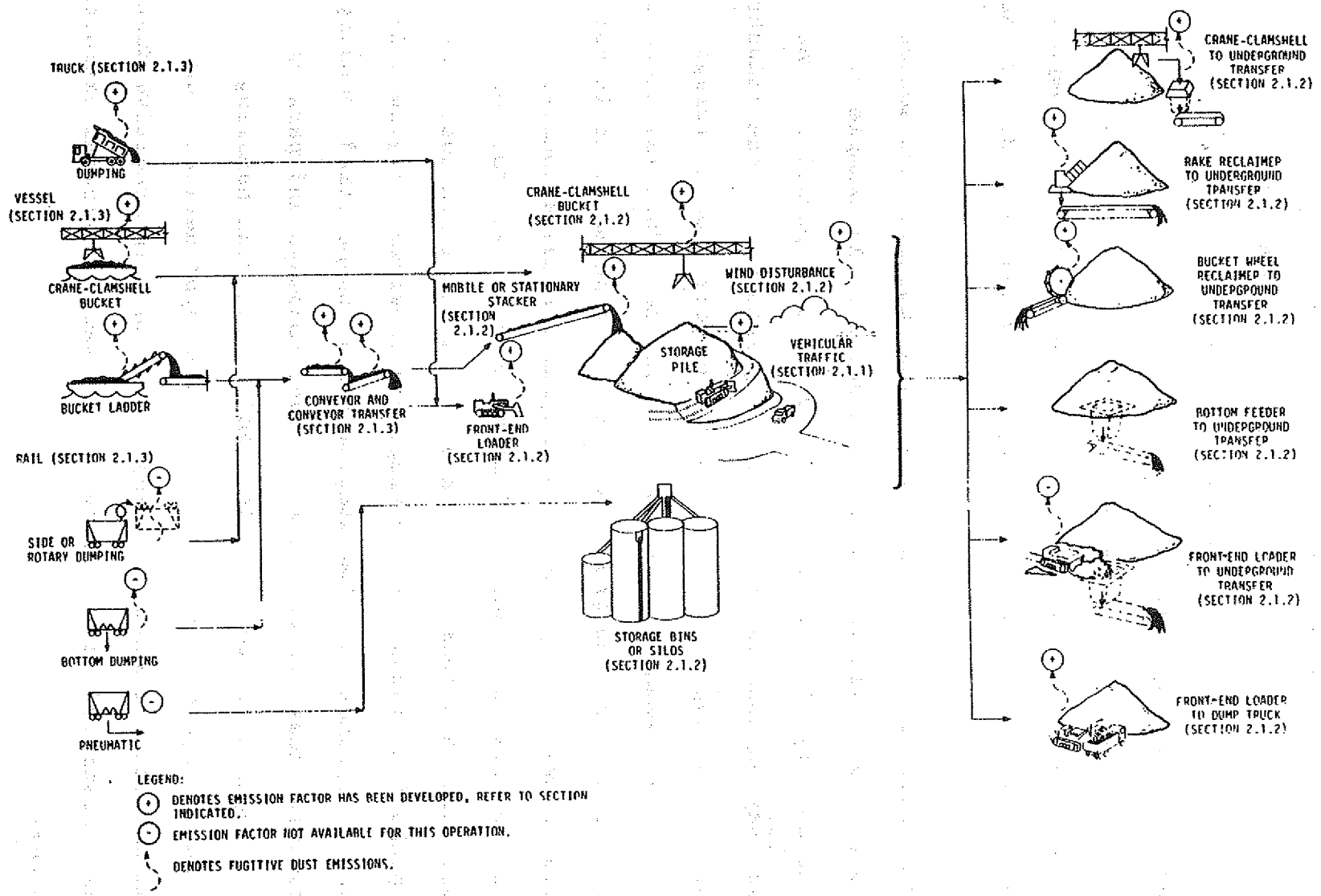

Figure 2.1-1. Order and location of general fugitive dust sources in a hypothetical industrial setting.

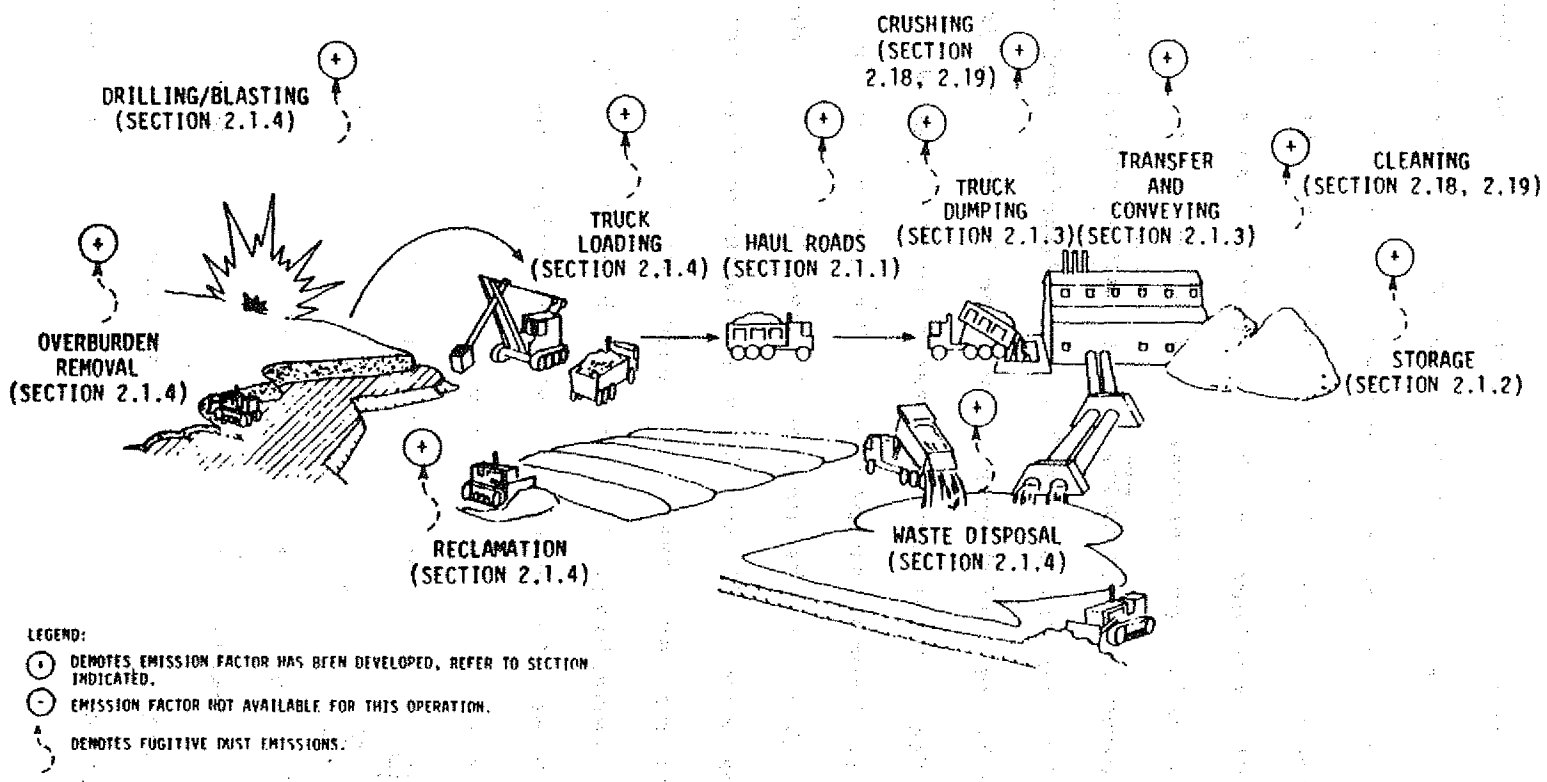

Figure 2.1-2. Order and location of general fugitive dust sources in hypothetical mineral mining operation.

2.1.1 Plant Roadways and Parking Areas

2.1.1.1 Source Description--

The roadways and parking areas located on plant property can be significant sources of fugitive dust. The potential that a given road or parking area surface has for generating fugitive dust is dependent upon traffic volume and the nature of its surface. The surface can be categorized as either paved (concrete or asphalt) or unpaved (gravel or dirt).

Dust generated from paved surfaces results from vehicle activity that agitates the "surface loading" and causes that loading to become airborne. Surface loading is defined as the amount of foreign material present on a paved surface having the potential to become suspended. The amount of surface loading on a paved surface is the composite result of: 1) deposition of mud and dirt carryout, 2) spillage or leakage from moving vehicles, 3) pavement surface wear, 4) runoff or erosion of adjacent land areas, 5) atmospheric fallout, 6) biological debris, 7) wear from tires and brake linings, 8) exhaust emissions, 9) litter, and 10) application of ice control materials.[1]

In contrast to paved surfaces the source of dust generation from unpaved and untreated surfaces is largely from actual road bed material rather than any "surface loading".

In both cases, paved and unpaved, the actual suspension of fugitive dust is the result of vehicular traffic on the surface. Both road bed and surface loading material are mechanically

broken down by the tires and subsequently entrained in the ambient air by the air turbulence created by the moving vehicle. In addition to vehicle entrainment, a smaller amount of dust may also be suspended as a result of wind disturbance of the surface loading.

In some instances the unpaved road shoulders can be another source of fugitive dust. This occurs when the roadway is narrow and is ineffectively curbed. Vehicles traveling the road may at times stray from the road surface onto the shoulders and cause significant additional dust generation.

2.1.1.2 Fugitive Dust Emission Factors--

Emission factors for both paved and unpaved surfaces have been determined from field test data on public roadways. Adequate data on the condition of plant roads or parking areas serving private property is not available. Lacking specific data for private plant roads, the public roadway emission factors are modified for use here.

Emission factors for both paved and unpaved surfaces are directly related to the number of vehicle miles travelled (VMT).

The U.S. Environmental Protection Agency provides an average emission factor for dust entrainment from paved roads as 5.6 g/mi.[1] This average emission factor includes tire wear and exhaust emissions (0.53 g/mi), and entrained fugitive dust (5.07 g/mi). Although this "average" value could be used, it would probably not be representative of industrial and commercial roadways as it is based on light duty, four-wheeled vehicles.

A more vehicle-specific emission factor can be determined through modifications to the components of the "average" emission factor.

The method for calculating a specific emission factor for vehicles travelling paved surfaces is given in the following equation:[1]

$$EF = P[(E) + 0.20\ (T/4) + 5.07\ (T/4)] \qquad \text{Equation 1}$$

where:

EF = emission factor, g/VMT,

P = fraction of particulate which will remain suspended (diameter less than 30 μm) from a paved road surface, 0.90 (Reference 1, p. 11.2.5-1),

E = particulate emission originating from vehicle exhaust (see Table 2.1.1-1),

0.20 = tire wear in g/VMT, representing a four-wheeled vehicle,

5.07 = entrained dust in g/VMT, representing a four-wheeled vehicle, and

T = number of tires per vehicle.

The average and specific vehicle emission factors for paved surfaces are given in Table 2.1.1-1. The exhaust emissions and tire wear included in the EPA's average paved road emission factor[1] are representative of a fleet composed primarily of light-duty, four-wheeled gasoline vehicles. However, because of the great variety of vehicles which transit plant property, specific emission factors are presented for ten, twelve, and eighteen-wheeled, heavy-duty gasoline and diesel vehicles.

TABLE 2.1.1-1. EMISSION FACTORS FOR VEHICLES TRAVELLING PAVED SURFACES
(g/mi)

Vehicle type	Exhaust (E)[a]	Tire wear[b,c]	Reentrained[c] dust	Initial[d] emission factor	Final emission factor[e]	Emission factor reliability
Average[f]	0.53		5.07	5.6	5.0	g
Light-duty gasoline (4-wheeled)	0.34	0.20	5.07	5.6	5.0	g
Heavy duty gasoline (10-wheeled)	0.91	0.50	12.68	14.1	12.7	g
Heavy duty diesel						
(12-wheeled)	1.30	0.60	15.21	17.1	15.4	g
(18-wheeled)	1.30	0.90	22.82	25.0	22.5	g

[a] Exhaust emissions are specific for fuel and vehicle type.[1]

[b] The tire wear component is based upon 0.20 g/VMT for a four-wheeled vehicle and can be adjusted upwards for vehicles with large numbers of wheels.[1]

[c] The reentrained dust component is estimated to be directly proportional to the number of tires. An additional multiplication factor of 2.5 should also be applied to the tire wear and reentrained dust columns when considering large wheeled equipment, i.e., mining haul trucks and wheeled-tractors, loaders or dozers.[2]

[d] The initial emission factor is the sum of the exhaust, tire wear, and reentrained dust components.

[e] The final emission factor is the initial emission factor multiplied by a factor of 0.90. The factor of 0.90 accounts for that amount of particulate which will remain suspended.[1]

[f] Reference 1.

[g] Reference 1 fugitive dust emission factor equations and their resulting emission factors are not assigned reliability values.

Fugitive dust from unpaved surfaces can be determined using the EPA's published procedure. This procedure is expressed in the following equation:[1]

$$EF = (P)\ (0.81)\ (s)\ (S/30)\ ((365-W)/365)\ (T/4) \qquad \text{Equation 2}$$

where:

EF = emission factor, lb/VMT,

P = fraction of particulate which will remain suspended (diameter less than 30 μm) from a gravel road bed, 0.62; from a dirt road bed, 0.32 (see Table 2.1.1-2),

s = silt content of road bed material, percent; 12 percent approximate average value (values range between 5 and 15 percent),

S = average vehicle speed, mph,

W = days with 0.01 inch or more of precipitation,[2] and

T = average number of tires per vehicle.

When using Equation 2 for vehicles with oversized tires, a multiplication factor of 2.5 should be included. This factor will account for the comparative difference in the width of tire faces between average road vehicles and oversized tire vehicles. This factor (2.5) can be used to estimate entrained dust emissions from most wheeled construction equipment, i.e., wheeled-tractors, loaders or dozers, and mining haul trucks.[3]

Emission factors or emission factor equations have not been developed specifically for dust generation from road shoulders, and such emissions have not received much attention in the literature. If dust from this source is considered a significant problem, it is suggested that the unpaved road emission factor be

used to estimate the emissions from a dirt or gravel shoulder in lieu of a specific emission factor.

2.1.1.3 Characterization of Fugitive Dust Emissions--

The chemical or mineral composition of road dust depends directly on the type of material deposited on the paved surface or the type of material used in the road bed of the unpaved surface.

Size distribution--The particle size range for fugitive dust from plant roadways and parking lots depends upon the type of road surface. Table 2.1.1-2 gives the size distribution of fugitive dust by surface type.

TABLE 2.1.1-2. TYPICAL SIZE DISTRIBUTION OF FUGITIVE DUST PARTICLES BY SURFACE TYPE[a]
(percentages)

Size range	Paved surface	Unpaved surfaces	
		gravel	dirt
<5 μm	50	23	8
5-30 μm	40	39	24
>30 μm	10	38	68

[a] Reference 1, p. 11.2.1-4.

Density and composition--The density and composition of fugitive dust from paved and unpaved surfaces will vary widely depending upon the type of material used to construct the pavement or road bed and the type of material deposited on the surface.

Health effects--When considering possible effects on human health, fugitive particulates can be characterized as being either toxic, pneumoconiosis producing, or of general nuisance.[4]

The toxic components of fugitive dust will vary depending upon the type of material on the road surface and the vehicles traveling that surface. Possible toxic components of surface loading on roadways are lead, asbestos, and the combustion products of fuel (this excludes any toxic compounds specific to the material being hauled which may have been spilled on the road surface). Organic and inorganic lead contaminants originate from the combustion of gasoline with lead-based anti-knock ingredients. The inhalation of lead compounds from automotive exhaust is not considered to be a significant cause of acute lead poisioning; however, prolonged exposure to automotive exhaust can produce chronic lead poisoning.

The environmental impact of lead determined directly from auto exhaust and from reentrained dust has been established.[5,6] Lead comprises only 0.5 percent of the road dust on heavily traveled roads.[6] Thus, the lead component in reentrained dust from plant surfaces can probably be considered as insignificant due to a lower traffic volume and the use of diesel and other fuels containing lower lead content.

Neither asbestos from brake lining wear nor combustion products from vehicles have been a subject of specific epidemiological studies that would define their potential health-effect role as a component of road dust. In the absence of

specific quantitative information, the presence of lead, asbestos and combustion products in fugitive dust arising from plant roadways can not be addressed from a health effects standpoint.

Pneumoconiosis is an ailment commonly associated with dust inhalation. Literally translated, pneumoconiosis means "dust in lungs "; however, a more functional and contempory definition states that it is "the accumulation of dust in the lungs and the lung tissue reaction to its presence." In the case of fugitive dust, the potential for pneumoconiosis exists only if substances like asbestos and silica are present in large enough concentrations. No documentation exists on quantitative amounts of these substances in road dust.

The most viable impact fugitive road dust has is in its role as a nuisance dust. The term nuisance applies to any particulate producing debility due to its physical presence in the lungs. The effects of nuisance dust are usually reversible and cannot be considered as being toxic. They are more properly an irritant, especially to individuals already possessing some pulmonary ailment, i.e., asthma or emphysema.[4]

2.1.1.4 Control Methods--

A number of control methods are available for minimizing fugitive dust generation from plant roadways and parking areas. These control measures are presented by roadway surface type (paved or unpaved). Control measures available for paved surfaces are sweeping (broom and vacuum), flushing operations, general housekeeping measures, and speed reduction programs. The

control measures for unpaved surfaces include the application of chemical stabilizers (dust suppressants), road oiling, physical improvements to the road surface (including paving) and speed reduction.

Techniques, efficiencies and costs for controlling fugitive dust from paved surfaces--Sweeping and flushing paved surfaces are the primary control measures used for reducing fugitive dust from paved surfaces. Accumulated surface loading can be removed with sweeping or flushing measures alone or in combination. Good housekeeping is a preventative measure used to limit the on-going accumulation of particulate matter on the surface. Sweeping as a control measure is recommended with one note of caution: The actual effectiveness of sweeping control measures has not been clearly established, and it has been suggested that broom sweepers may actually produce and suspend more fines than they remove.[3]

However, estimated control efficiencies for broom sweepers are reported as 70 percent when used on a biweekly schedule.[7] The initial cost of a broom sweeper designed for industrial roadway use ranges from 5,000 dollars for a trailer-type sweeper to 15,000 dollars for a self-propelled unit (includes water spray system).[7] Annual operating costs have been estimated at 22,000 dollars per year.[7] The estimated control efficiency for a vacuum sweeper has been reported at 75 percent. The initial cost for a vacuum sweeper is 27,000 dollars with annual operating expenses

running approximately 25,000 dollars per year.[7] These figures have been adjusted to reflect costs in January 1980 dollars as have all the costs presented in this document.

Flushing of paved surfaces with water reduces the amount of material available for reentrainment. Water flushing is considered to be more effective than sweeping. However, flushing paved surfaces adjacent to unpaved road shoulders may increase mud tracking and carry-on. This increased carry-on has the potential to be a significant source of fugitive dust emissions.

A weekly water flushing operation is estimated to have an effective control efficiency of approximately 80 percent. The initial cost of a 3,000 gallon capacity flusher is approximately 13,000 dollars (excludes truck chassis) with an annual operating cost estimated to be 22,000 dollars per year.[7]

Good housekeeping practices, although a control measure in itself, should be used in conjunction with a more direct removal technique such as flushing. Housekeeping measures include 1) rapid removal of spillage, 2) covering of haul truck beds to prevent wind losses, and 3) cleaning truck tires and under carriages to reduce carryout. No estimate of control efficiencies or costs are available.

A summary of these control efficiencies and costs are presented in Table 2.1.1-3.

<u>Techniques, efficiencies and costs for controlling fugitive dust from unpaved surfaces and road shoulders</u>--The options available for controlling fugitive dust from unpaved plant surfaces

TABLE 2.1.1 -3. SUMMARY OF TECHNIQUES, EFFICIENCIES AND COSTS FOR CONTROLLING FUGITIVE DUST FROM PAVED AND UNPAVED SURFACES

Control method	Estimated control efficiency, %	Initial cost, 1980 dollars	Annual operating cost, 1980 dollars
Paved surfaces			
° Sweeping			
- Broom	70	5,000-15,000[a]	22,000/year
- Vacuum	75	27,000	25,000/year
° Flushing			
- Water	80	13,000[b]	22,000/year
Unpaved surfaces			
° Chemical stabilization[c]	90-95	6,000-13,000/mile	5,000-12,000/mile[d,e]
° Road oiling[c]	75	1,200-2,500/mile	(Re-oil once a month)
° Watering[c]	50	12,000	4,000/mile[e,f]
° Surface improvements			
- Aggregate	30	NA	NA
- Oil and double chip	80	11,000/mile	2,500-5,000/mile[e,g]
- Paving	90	34,000-61,000/mile	(Resurface every five years)
° Speed reduction[h]			
- 30 mph	25	NA	NA
- 20 mph	65	NA	NA
- 15 mph	80	NA	NA

[a] The lower value is for a trailer-type sweeper, the upper value is for a self-propelled unit.

[b] Value represents cost of 3,000 gal. capacity unit excluding truck chassis.

[c] Applies to both unpaved roadways and road shoulders.

[d] Frequency of application was unspecified.

[e] Based on a plant having 6.3 miles of unpaved roads, this average was determined from unpaved road mileage at four steel plants, Reference 7, page 6-16.

[f] Represents a frequency of two waters per day.

[g] Value based upon resurfacing once a year.

[h] Assumes an uncontrolled speed of 40 mph.

(unpaved roads, road shoulders and parking lots) are chemical stabilization through the use of dust suppressants, road oiling, surface improvement and speed reduction.

The suppression of fugitive dust from unpaved surfaces can be achieved using a variety of chemical stabilizers. The chemicals used for this purpose are either wetting or binding agents which are diluted with water and sprayed over the unpaved surface. Effective use of a chemical stabilizer can only be achieved when it is used as part of a continual application program with the frequency of application related to the relative use of the roadway. The control efficiency for this measure is estimated to be between 90 and 95 percent.[7] The initial costs are estimated to be between 6,000 and 15,000 dollars per mile of roadway (approximately 130 thousand square feet).[7] Annual operating costs range between 5,000 and 12,000 dollars per mile of roadway.[7] A summary of the types of chemicals used, their costs, and application rates is presented in Appendix B.

Cost estimates for oiling unpaved roadways and parking areas were obtained from private contractors operating in Cincinnati, Cleveland and Columbus.

The initial cost estimate of a contract road oiling project is based upon three factors: 1) the total amount of surface area to be treated; 2) the configuration of the surface area; and 3) the availability of waste oil. The first factor, surface area, is obviously related to the cost of the task. The larger the area to be treated, the more time and material required and, as

a result, the higher the final cost. Contractors in Ohio were not willing to discount the cost of the project on a volume basis. The second factor, configuration of the surface area, means that an area with a large number of curves or corners requires excessive stopping and starting of the application vehicle. This action wastes oil and, as a result, increases the total cost of the project. The third factor, availability of waste oil, determines the price the contractor must pay for the raw materials. Despite the current oil problems, waste oil prices have not increased to the same degree as other petroleum products. The contract cost estimates, determined for three metropolitan areas in the State of Ohio, are given in Table 2.1.1-4.

Road oiling contractors use two types of waste oil for application purposes: crankcase oil (oil from garages and service stations) and industrial oil (waste oil from industrial processes). The crankcase oil is preferred over the industrial oil because it contains fewer amounts of contaminants (chemicals and water soluble substances) and, as a result, has a wider range of application.[9] The possible impact on adjacent plant life and landscaping is a factor to be considered when oiling unpaved surfaces. An additional problem with road oiling is that it can significantly increase the amount of surface runoff. Oiling large areas may require special precautions to handle the excess volume of water.[3] The control efficiency for road oiling is estimated to be 75 percent.[7] The initial (contract) cost of

TABLE 2.1.1-4. CONTRACT COST ESTIMATES FOR OILING UNPAVED ROADWAYS (1980 Dollars)

Metropolitan area[a]	Dollars per gallon	Dollars per 10^3 square ft.[b]	Gallons per 10^3 square ft.
Cincinnati	0.21	9.50 - 11.50	50
Cleveland	0.31	11.50	37
Columbus	0.28	13.50	48

[a] Cincinnati area, two responses. Cleveland and Columbus areas, one response each.[10]

[b] Variations in the cost per 10^3 square ft. result from both the differences in the cost of waste oil and each contractor's estimate of the amount of oil necessary to cover the 10^3 square ft. area.

oiling a one mile length of unpaved roadway (approximately 130 thousand square feet) ranges between 1,200 and 1,800 dollars depending on the contractor.[7] Values as high as 2,500 dollars have been reported.[7]

Another method of dust suppression for unpaved surfaces is watering. This method, although often considered less expensive than chemical treatment, in fact has many drawbacks and can be more expensive. The most obvious drawbacks are 1) the need for a continuous application program, 2) decreased efficiency during dry weather conditions, 3) the increased potential to add mud carry-on to nearby paved surfaces and 4) limited applicability during cold winter periods. The estimated control efficiency for this measure is approximately 50 percent.[7] The initial costs for watering are 12,000 dollars (the cost of equipment and truck) with annual operating costs approximately 4,000 dollars per mile per year based upon 2 applications per day.[3,7]

Surface improvements can also be used to control fugitive dust from unpaved roads. These include 1) coverage with a low silt aggregate, 2) oil and double chip surfacing and 3) paving.

Covering an unpaved road with aggregate assumes that the aggregate material (limestone, river gravel, etc.) has a lower silt content than the dirt roadbed, thus reducing the amount of fines available for entrainment. The control efficiency for this technique is very low, approximately 30 percent.[7] Surface coating of this type requires continuous road maintenance to sustain

the 30 percent level of effectiveness.[7] Initial and annual operating costs for this technique are not available.

The second surface improvement method, oil and double chip surfacing, achieves a higher degree of control than aggregate and requires much less maintenance. The control efficiency for this technique is 80 percent, and the initial cost per mile (130,000 ft^2) is 11,000 dollars.[7] The annual cost will depend on how often the road will need to be resurfaced. Assuming a resurfacing frequency of once every 2 to 4 years the costs will range between 2,500 and 5,000 dollars per year.[7]

The third method for controlling fugitive dust from unpaved surfaces is to pave the surface. The control efficiency for this measure is the highest of the surface improvement techniques, approximately 90 percent.[7] The initial cost of paving one mile of unpaved surface with asphaltic concrete is between 34,000 and 61,000 dollars depending upon the type of road bed required. The roadway will generally have to be resurfaced at 5 year intervals.[7]

Speed reduction also can be used as a control measure for reducing fugitive dust from unpaved surfaces. This method is attractive in that the initial and operating costs may be very low (no actual cost estimates are available). However, speed reduction measures could require additional trucks and drivers to maintain production levels.[11] Also, the enforcement of speed restrictions is often very difficult to maintain. The effective control efficiencies for speed reduction increase as the speed is reduced. Based on an assumed uncontrolled speed of 40 miles per

hour, a speed restriction to 30 mph will result in a 25 percent control efficiency; a 20 mph restriction, 65 percent; a 15 mph restriction, 80 percent.[1]

A summary of the control efficiencies and costs for minimizing dust from paved and unpaved roadways are presented in Table 2.1.1-3.

The tables do not contain figures for the cost-effectiveness of control due to the variability in types of vehicles and mileage of plant roads from plant to plant. Selection of Reasonably Available Control Measures (RACM) is also hampered by the variability of the problem from plant to plant and industry to industry. However, a selection can be made based on a typical situation with the caveat that RACM can differ in unusual economic or logistic situations. For paved roads, the recommended control measure is the use of water flushing supplemented by a good-housekeeping program to minimize spills and carry-on of dirt and mud. The program would consist of such measures as covering trucks, prompt clean up of spills, elimination of carry-on by avoidance of unpaved areas where practicable, and water washing of wheels where necessary.

For control of unpaved areas, the recommended control technique is the use of chemical stabilization or oiling, coupled with speed reduction. Where the plant has large unpaved areas, frequently traveled, and to be used for many years, it may be economically justifiable to pave the road (oil and double chip or asphaltic concrete). This must be justified on a case-by-case basis.

Benefits of control measures--The control of fugitive dust from plant roadways and parking areas does not provide an obvious economic benefit. However, this control may indeed have a few hidden benefits which may result in cost savings to the industry. The primary theme underlying each of the control measures described in this section is to maintain a good surface upon which industry vehicles will operate. Surface improvements can be expected to result in reduced equipment wear. Dust suppression will increase driver visibility and may result in less down time due to equipment cleaning and maintenance. In many cases where a facility is located near residential areas, the control of fugitive dust from roadways and parking areas will increase the aesthetic appeal of the property.

REFERENCES FOR SECTION 2.1.1

1. Compilation of Air Pollutant Emission Factors Supplements Nos. 1-8. U.S. Environmental Protection Agency, Office of Air and Waste Management and Office of Air Quality Planning and Standards. Research Triangle Park, North Carolina. August 1977.

2. Local Climatological Data. National Oceanic and Atmospheric Administration. Environmental Data Service. National Climatic Center, Asheville, North Carolina. January 1979.

3. Technical Guidance for Control of Industrial Process Fugitive Particulate Emissions. U.S. Environmental Protection Agency, Office of Air and Waste Management and Office of Air Quality Planning and Standards. Research Triangle Park, North Carolina. March 1977.

4. Occupational Diseases - A guide to their recognition. U.S. Department of Health, Education and Welfare, Public Health Service. Center of Disease Control, National Institute for Occupational Safety and Health, U.S. Government Printing Office, Washington, D.C. June 1977.

5. Waldbott, George L. Health Effects of Environmental Pollutants. The C.V. Mosby Company, St. Louis, Missouri. 1978

6. Air Quality Criteria for Lead. U.S. Environmental Protection Agency, Office of Research and Development. Washington D.C. EPA-600/8-77-017. December 1977.

7. Fugitive Emissions From Integrated Iron and Steel Plants. Industrial Environmental Research Laboratory, Office of Research and Development. U.S. Environmental Protection Agency, Research Triangle Park, North Carolina. EPA-600/2-78-050. March 1978

8. Handy, R. L., J .M. Hoover, K. L. Bergeson and D. E. Fox. Unpaved Roads as Sources for Fugitive Dust. Transportation Research News (60): 6-9. Fall 1975.

9. Investigation of Fugitive Dust; Volume I: Sources, Emissions and Control. U.S. Environmental Protection Agency, Research Triangle Park, N.C. EPA-450/3-74-036. 1974

10. Unpublished Survey of Contractors, PEDCo Environmental, Inc., Cincinnati, Ohio. Summer 1979.

11. Cost Estimates for Monitoring, Modeling, and Fugitive Dust Controls for Surface Coal Mines. PEDCo Environmental, Inc. Cincinnati, Ohio. Prepared for the U.S. Department of the Interior, Washington D.C. July 1979. Draft.

2.1.2 Aggregate Storage Piles

2.1.2.1 Source Description--

A storage pile is any mound of material (usually mineral) placed in a temporary outdoor location. The storage piles are usually uncovered allowing the stored material to be exposed to the elements. This characteristic lack of cover or housing around a storage pile is a result of the frequent necessity to transfer material from the storage site to a process operation.

Dust emissions can occur at several points in the storage cycle of an aggregate: 1) during load-in (addition) of material onto the pile, 2) during wind disturbance of the pile, 3) during the movement of vehicles in the storage area, and 4) during load-out (removal) of material from the pile.[1]

2.1.2.2 Fugitive Dust Emission Factors--

The fugitive dust generated from aggregate storage piles occurs as a result of the four major emission-producing activities given above. Their relative percent contributions vary depending upon the type of material being stored and the exact method of storage being used. The calculation of fugitive dust emission factors from aggregate storage piles can be approached in two fashions: 1) using a gross overall emission factor equation or 2) using a set of emission factor equations specific for each of the four operating activities.

Gross Overall Emission Factor Equation

The gross estimate of fugitive dust emissions to be expected from aggregate storage piles, based upon the number of tons of material placed in storage, can be determined using Equation 1.[1]

$$EF = 0.33/(PE/100)^2 \qquad \text{Equation 1}^1$$

where:

EF = Emission factor, lb/ton of material placed in storage, and

PE = Thornthwaite's precipitation-evaporation index (Figure 2.1.2-1).

Equation 1 represents the fugitive particulate emissions with a diameter less than 30 μm. This particulate size was determined[2] to be the effective cutoff diameter for the capture of aggregate dust by a standard high-volume filter based on a particulate density of 2.0 to 2.5 g/cm^3. The emission values calculated by this equation express only that amount which is likely to remain suspended indefinitely.[1] No details on the development of this equation or the estimated accuracy were available from the reference.

Equation 1 contains one correction parameter, the PE index or Thornthwaite's precipitation-evaporation index, which accounts for the changes of climate throughout the United States.[3] The PE index is an approximation of the average amount of surface moisture characteristic to a particular area. The PE index values for the State of Ohio and adjacent areas are given in Figure 2.1.2-1.

Table 2.1.2-1 shows how the total emission factor in Equation 1 can be divided into the individual contributions of the

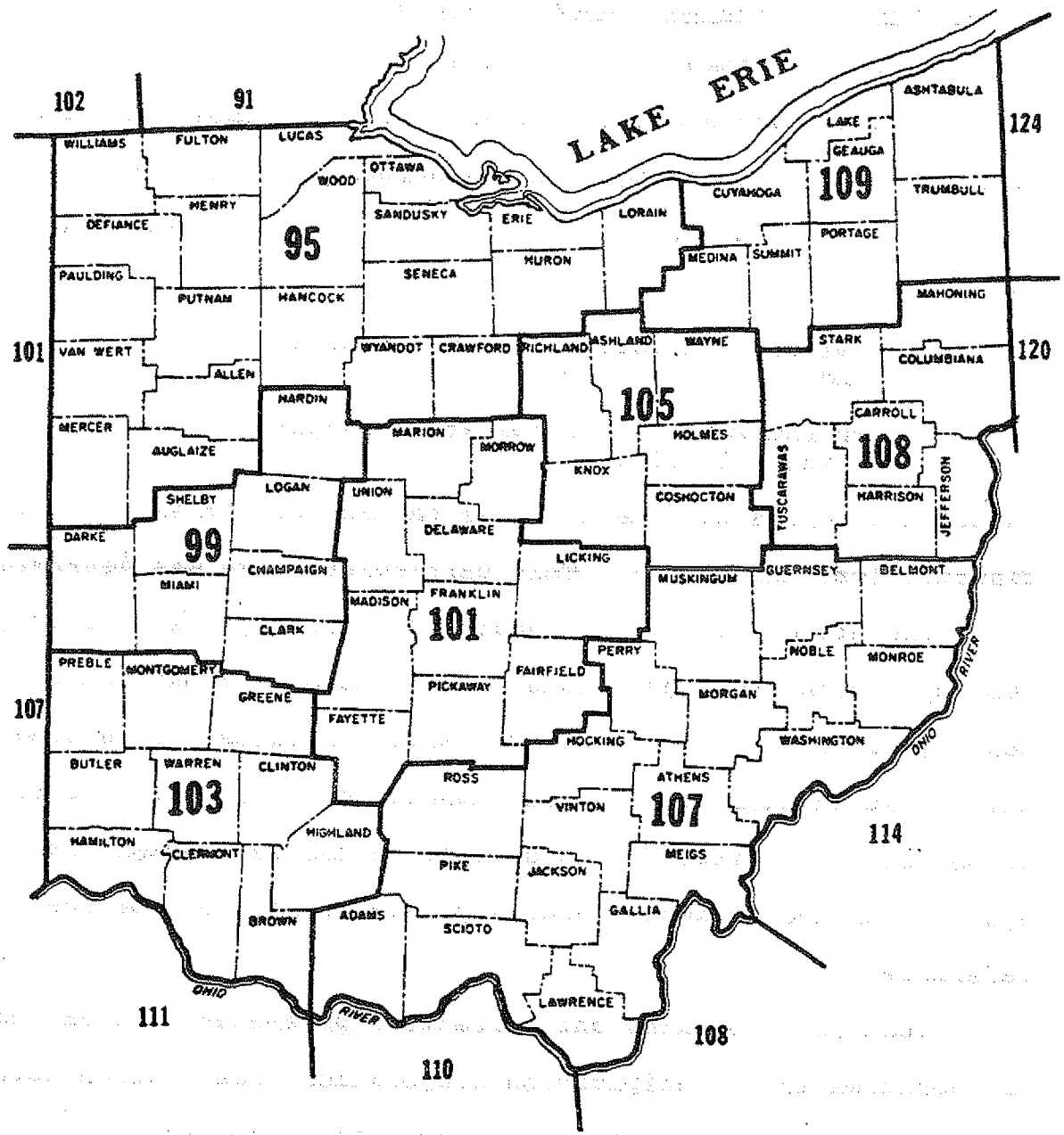

Figure 2.1.2-1. Thornthwaite precipitation-evaporation (PE) indices for the State of Ohio.[3]

TABLE 2.1.2-1. PERCENT CONTRIBUTION OF AGGREGATE STORAGE PILE ACTIVITIES TOWARD THE TOTAL FUGITIVE EMISSION RATE[2]

Source activity	Approximate percent contribution[a]
Loading of the material onto piles	12
Wind disturbance and erosion of stored material	33
Loadout of the material from piles	15
Vehicle movement	40
Total	100

[a] The emission contributions of each source activity are based on field tests of suspended dust emissions from crushed stone, sand and gravel storage piles. A 3-month storage cycle was assumed.[2]

four source activities. This distribution of emissions by source activity is representative of aggregate storage piles in general, but may vary for any specific source or stored material.

Specific Emission Factor Equations

Specific emission factor equations are available for each of the four major sources of fugitive dust associated with the storage cycle of aggregate material.[4] The equations are for specific types of equipment and storage material; thus, they should be used with caution when applied to other situations. Emissions from the first stage in the storage cycle, loading of material onto the pile, can be exemplified by means of a conveyor/stacker (continuous load-in) or a front-end loader (batch load-in). Emissions from the second stage in the cycle, wind disturbance of the pile, are exemplified by using a wind erosion equation. Emissions from the third stage are exemplified by using an equation for determining vehicular traffic around the storage piles. Emissions from the final stage, the load-out of material from the pile, are exemplified by the transfer of aggregate by a front-end loader from the pile to a truck.

The emissions from the operation of a conveyor/stacker (continuous load-in) are determined using Equation 2.[4] The base emission rate is corrected by three variables, the silt content of the material being stored, the moisture content of the material being stored, and the mean wind speed occurring during the operation.

$$EF_{(continuous)} = 0.0018 \frac{(S/5)(U/5)}{(M/2)^2} \qquad \text{Equation 2}^4$$

where:

EF = emission factor, lb/ton of material loaded onto the pile by a continuous operation,

S = silt content of the stored material in weight percent (see Table 2.1.2-2),

M = moisture content of the stored material in weight percent (see Table 2.1.2-2), and

U = mean wind speed, mph (see Table 2.1.2-3).

Emissions from the operation of a front-end loader (batch load-in) are determined using Equation 3.[4] The base emission rate is corrected by four variables: the silt content, mean wind speed, material moisture content and effective loader capacity.

$$EF_{(batch)} = 0.0018 \frac{(S/5)\ (U/5)}{(M/2)^2 (Y/6)} \qquad \text{Equation 3}^4$$

where:

EF = emission factor, lb/ton of material loaded onto the pile by a batch operation,

S = silt content of the stored material, in weight percent (see Table 2.1.2-2),

M = moisture content of the stored material, in weight percent (see Table 2.1.2-2),

U = mean wind speed, mph (see Table 2.1.2-3), and

Y = effective loader capacity, cubic yards.

The effective loader capacity is the working bucket capacity of the front-end loader being used to add material to the storage pile. The "mean wind speed" can be determined for a given study

TABLE 2.1.2-2. REPRESENTATIVE SILT CONTENT, MOISTURE CONTENT AND THE DURATION OF STORAGE PARAMETERS FOR SPECIFIC STORAGE MATERIALS[4,5]

Material in storage	Silt content, weight %	Moisture content, weight %	Duration of storage, days
Coal	4	6	107
Coke	1	1	50
Iron ore	11	1	43
Limestone	2	2	76
Sand	10		
Sinter	1.5	1	90
Slag	2	1	60
Top soil	40		

period (using actual field measurements) or estimated using the data given in Table 2.1.2-3.

The fugitive emissions occurring as a result of wind blown erosion of the storage pile can be determined using equation 4.[4] The base emission rate for wind erosion is adjusted by four correction parameters: the silt content of the storage material, the duration of storage, the number of dry days*, and the percentage of time that wind speeds exceed 12 mph.

$$EF = 0.05\ (S/1.5)(D/90)(d/235)(f/15) \qquad \text{Equation 4}$$

where:

EF = emission factor, lb/ton stored,

S = silt content of the stored material, weight percent (see Table 2.1.2-2),

D = duration of storage, days (Table 2.1.2-2),

d = dry days* per year (Figure 2.1.2-2), and

f = percentage of time wind speed exceeds 12 mph (References 6 and 7).

The percentage of time that the wind speed exceeds 12 mph is most appropriately obtained from actual on-site monitoring. However, should this type of data be unavailable, hourly wind speed for each day (recorded at the nearest metropolitan airport) can be obtained from the National Weather Service.[7]

Fugitive dust emissions occurring from vehicle traffic around storage piles can be determined using the unpaved roadway emission equation given in Section 2.1.1. However, a method of

---

* Dry days are those days with <0.01 inches of precipitation.[6]

TABLE 2.1.2-3. THIRTY-YEAR ANNUAL WIND SPEED FOR SELECTED OHIO CITIES[6]

City	Mean wind speed, mph
Akron	9.9
Cincinnati	9.1
Cleveland	10.8
Columbus	8.7
Dayton	10.2
Mansfield	11.0
Toledo	9.5
Youngstown	10.0

calculating vehicle traffic emissions, specific for activity around the storage piles, is given in Equation 5.[4]

$$EF = 0.10\ K\ (S/1.5)(d/235) \qquad \text{Equation 5}^{4}$$

where:

EF = emission factor, lb/ton (of material put through the storage cycle),

K = activity factor, dimensionless (Table 2.1.2-4),

S = silt content of stored material, weight percent (see Table 2.1.2-2), and

d = dry days per year (see Figure 2.1.2-2).

The activity factor (K) is related to the type of loading (or haul) equipment employed and its level of usage as considered typical for various types of materials. The activity factor is a dimensionless number that places a value on the piece of equipment being used for specific materials relative to the equipment used in the original test study (front-end loader) on gravel operations. Table 2.1.2-4 gives values for K.

The final source of fugitive dust emissions that can be determined for a specific portion of the storage pile cycle is the load-out of material from the pile. The base emission rate for load-out of material from the pile by a front-end loader into a truck is adjusted by four correction parameters: the silt content of the storage material, the moisture content of the storage material, the mean wind speed, and the effective loader capacity.

The emission factor for the load-out of material from a storage pile by a front-end loader is presented in Equation 6.[4]

Figure 2.1.2-2. Mean number of dry days (less than 0.01 inch of precipitation) in the State of Ohio.[1,6]

TABLE 2.1.2-4. VEHICULAR ACTIVITY FACTORS[4]

Material	Range	Mean
Coal	0.0-0.25	0.08
Coke	0.0-1.0	0.25
Gravel[a]	0.25	-
Iron ore[b]	0.0-0.25	0.06
Limestone[c]	0.25	-
Sand[d]	1.0	-
Sinter	0.0	-
Slag	1.0	-
Top soil	-	-

[a] Large stone aggregate.

[b] Values are for both lump ore and pellets, 0.25 was determined for pelletized ore.

[c] Dolomite limestone.

[d] Sand and gravel.

$$EF = 0.0018 \frac{(S/5)\ (U/5)}{(M/2)^2 (Y/6)} \qquad \text{Equation 6}^4$$

where:

EF = emission factor, lb/ton of material transferred,

S = silt content of stored material, weight percent (Table 2.1.2-2),

M = moisture content of stored material, weight percent (Table 2.1.2-2),

U = mean wind speed, mph (Table 2.1.2-3), and

Y = effective loader capacity, cubic yards.

The effective loader capacity of the front-end loader will vary depending upon its intended use. A typical front-end loader used for the purpose of loading gravel will have an effective loader capacity of 3 cubic yards.

Details regarding the actual development of Equations 2 through 6 and the accuracy and limitations of application are not available; but given the generalities of application, the estimates should be considered to be within an order-of-magnitude at best.

A summary of the emission factor equations and correction parameters are presented in Table 2.1.2-5.

2.1.2.3 Particle Characterization--

Particle Size, Density, and Composition

The particle size of airborne fugitive dust from aggregate storage piles does not vary greatly and can be stated to be somewhat independent of the material being stored.[8] Typical particulate size ranges for fugitive dust from aggregate storage piles are given in Table 2.1.2-6. Recent information does

TABLE 2.1.2-5. SUMMARY OF EMISSION FACTOR EQUATIONS AND CORRECTION PARAMETERS

Emission category	Emission factor equation
Gross overall emission rate[a]	$EF = 0.33/(PE/100)^2$
Load-in (continuous operation)[b]	$EF = 0.0018 \frac{(S/5)\ (U/5)}{(M/2)^2}$
Load-in (batch operation)[b]	$EF = 0.0018 \frac{(S/5)\ (U/5)}{(M/2)^2 (Y/6)}$
Wind erosion[b]	$EF = 0.05\ (S/1.5)(D/90)(d/235)(f/15)$
Vehicle activity[b]	$EF = 0.10\ K\ (S/1.5)(d/235)$
Load-out[b]	$EF = 0.0018 \frac{(S/5)\ (U/5)}{(M/2)^2 (Y/6)}$

Correction parameters

Symbol - Description	
PE - Thornthwaite's Precipitation Evaporation index	Figure 2.1.2-1
D - Duration of material in storage, days	Table 2.1.2-2
d - Number of dry days per year	Figure 2.1.2-2
f - Percent of time wind speed exceeds 13 mph	Reference 6,7
K - Activity correction	Table 2.1.2-4
M - Material surface moisture content, %	Table 2.1.2-2
S - Material silt content, %	Table 2.1.2-2
U - Mean wind speed, mph	Table 2.1.2-3
Y - Effective loader capacity, yd^3	Specific to equipment

[a] Reference 1.

[b] Reference 4.

TABLE 2.1.2-6. TYPICAL PARTICULATE SIZE RANGES FOR FUGITIVE DUST FROM AGGREGATE STORAGE PILES[a]

Size range	Percent by weight of emissions
<3 μm	30
3-30 μm	23
>30 μm	47

[a] Reference 9.

indicate that, although the particle size distribution may be fairly independent of the material being stored, the condition of the storage pile surface (disturbed or undisturbed) can influence the size distribution. Studies of coal storage piles indicate that an undisturbed pile surface will generate a smaller percentage of particles under 30 μm (approximately 9%) than a disturbed surface (approximately 21%).[10]

The density and composition of the fugitive emissions from aggregate storage piles will be directly related to the material being stored.

Hazardous or Toxic Nature of Fugitive Emissions from Aggregate Storage Piles

The hazardous or toxic nature of fugitive emissions from aggregate storage piles is almost entirely dependent upon the type of material being stored. It is not possible to discuss the nature of a health hazard without first knowing the storage material in question. The reader is directed to the health effects discussion in Section 2.1.1.3 which outlines the health problems associated with fugitive emissions from paved and unpaved surfaces for information on emissions generated during vehicle activity around the storage pile. For other storage pile activities, specific knowledge of the storage material is necessary. The hazardous properties of specific industrial materials can be found in Reference 11.

2.1.2.4 Control Methods--

The control methods available for reducing fugitive dust from activities associated with the storage of material in open piles are presented in this section by each type of activity: load-in, wind disturbance, vehicle traffic and load-out.

Techniques, Efficiencies and Costs for Controlling Fugitive Dust Emissions from Storage Pile Load-In

The control techniques for reducing dust from load-in activities consist of enclosures, chemical stabilization, and operating precautions. The enclosures include silos, stone ladders, wind guards and telescopic chutes. The chemical stabilization includes watering, the application of dust retardant, and the use of crusting agents. The final group of control techniques concern themselves with precautionary operating habits such as reducing the drop height of front-end loader buckets and making operators aware of the necessity of dust control.

Enclosures - Enclosure techniques include storage site enclosure (e.g., silos) and material handling enclosures (e.g., chutes). Storage site enclosures, like silos or warehouses, must be specifically designed for the material being handled. Additional structural considerations such as ability to withstand snow loads, wind or precipitation affect the design of any given silo or enclosing structure. Due to this degree of specificity, it is hard to place an exact efficiency rating or cost estimate on the use of storage silos or buildings. It is expected that a properly built storage silo would substantially reduce load-in

emissions when accompanied with control of the emissions from the material transfer into the silo.

Stone ladders are permanent devices which aid to guide material from a stacker to the pile. A stone ladder is a vertical tube with openings at various heights. The storage material will fill the tube until it reaches an opening, at this point the material will begin to flow out on to the pile. The estimated control efficiency for this device as compared to the emissions from a front-end loader is approximately 80 percent, and the initial investment is about 24,500 dollars.[4]

Wind guards are closely related to telescopic chutes except that they are of a fixed length. The wind guard covers the discharge end of a stacker helping to decrease the effective dispersing action of the wind. The estimated control efficiency for a wind guard on a stacker (when compared to a front-end loader) is approximately 50 percent.[4] The initial cost is estimated at between 12,000 and 61,000 dollars.[4]

A telescopic chute consists of a series of thin-walled cylinders which help to guide the material being dropped from the stacker to the pile. The telescopic chute retracts as the pile grows. This feature makes its use suitable for both stationary or mobile stackers. The purpose of a telescopic chute is to reduce a long drop distance to a few feet. The estimated control efficiency for a telescopic chute (compared to a front-end loader) is approximately 75 percent. The initial cost can be approximately 8,500 dollars.[4,8]

Chemical stabilization - The primary forms of chemical stabilization used during load-in activities are watering and wetting agent application. The water or wetting agent is applied by a spraying system at the discharge end of the stationary or mobile stacker. Relative to the use of a front-end loader, a stationary or mobile stacker with a spray system has been estimated by various sources to have a control efficiency of from 75 percent[4] to as high as 80 to 90 percent.[12] The initial investment in equipment is approximately 13,500 dollars.[4] This figure does not include the annual operating costs and assumes the use of water only. The application of chemical wetting, crusting or suppression agents to the storage pile results in higher costs. Depending on the agent used, costs can be between 0.5 and 1.5 cents per square foot of surface area.[4] A summary of common chemical agent costs is presented in Table 2.1.2-7.

Precautions - Operational precautions are assumed to have some potential to decrease the amount of fugitive dust generated when material is dropped from a front-end loader or height adjustable stacker. The ability of the equipment and operator to reduce the drop distance of the storage material can help to reduce the amount of fugitive dust emitted. A properly operated "variable height" stacker can gain a 25 percent control effiency over normal front-end loader operation.[4] The control efficiency gained through lowering the drop distance of a front-end loader was not addressed in the available literature. A summary of the

TABLE 2.1.2-7. CHEMICAL STABILIZING AGENTS FOR USE ON AGGREGATE STORAGE PILES[a,b]

Stabilization agent	Dilution	Application rate per 10^3 ft^2	Application cost, 1980 dollars per 10^3 ft^2
Organic polymers			
° Johnson-March SP-301[c]	Full strength	10 gal. concentrate	16.50[d]
° Apollo			
Pentron DC-3[e]	10% solution	1.2 gal. concentrate	4.20
Pentron DC-5[e]	10% solution	1.2 gal. concentrate	4.50
° Houghton Rexosol 5411-B[c]	2% solution	3 gal. concentrate	8.50
Petroleum resin water emulsion			
° Witco Chemical Coherex[c]	20% solution	20 gal. concentrate	4.90
Latex type synthetic liquid adhesive			
° Dowell M145 chemical binder[c]	4% solution	1.8 gal. concentrate	4.90

[a] Mention of a company or product name should not be construed as an endorsement by either the author of this document or the Ohio Environmental Protection Agency. It should also be noted that the table represents an example of the wide range of chemicals available for use. It does not attempt to include all chemical companies or all of their products.

[b] The figures given in this table are approximations and can be used in only a very cursory comparison of costs (on a usage basis).

[c] Reference 4, pages 6-11.

[d] Based upon a cost of 1.65 dollars per gallon, which assumes that the stabilizer will be purchased in quantities of 45 or more drums (at 55 gal. per drum).

[e] Reference 13.

control techniques and efficiencies for storage pile load-in activities are given in Table 2.1.2-8.

Techniques, Efficiencies and Costs for Controlling Fugitive Dust Due to Wind Disturbance of Aggregate Storage Piles

The control techniques for reducing fugitive dust from wind disturbed storage piles consist of building enclosures, applying chemical stabilizers or in some instances taking precautionary maintenance measures. The enclosures used to reduce wind disturbance include both silos and wind breaks. The chemical stabilization techniques include watering and application of surface crusting agents. The precautionary measure consists of maintaining as low a pile height as possible.

Enclosures - The protection of storage piles from the direct action of wind erosion and dispersion can be accomplished through the use of total (silo) or partial (wind break) enclosures. Silos are not often used for controlling fugitive dust. Instead they are usually constructed for the protective storage of special materials. In one instance, storing coal in a single large silo effectively eliminated from 95 to 100 percent of the wind generated emissions.[4,6]

The cost for constructing silos will vary for different materials. An approximate cost of 75 dollars per ton of material stored has been suggested.[4] Wind breaks, such as trees, shrubs or other vegetation, or man-made structures, have been estimated to provide a control efficiency of 30 percent.[4] The cost of such structures will vary greatly. For vegetative wind breaks, a

TABLE 2.1.2-8. A SUMMARY OF CONTROL TECHNIQUES, EFFICIENCIES AND COSTS FOR FUGITIVE DUST EMISSIONS FROM AGGREGATE STORAGE PILES

Emission source and control techniques	Estimated control efficiency, %[a]	Initial cost, (1980 dollars)	Annual operating costs, (1980 dollars)
Load-in			
° Enclosures			
- Silo	-	(see wind disturbance)	NA
- Stone ladders	80	24,500	NA
- Wind guards	50	12,000 to 61,000	NA
- Telescopic chutes	75	8,500	NA
° Chemical stabilization	75 to (80-90)	13,500	$4.20 to 16.50/$10^3$ ft^2
° Precautions	0-25	NA	NA
Wind disturbance			
° Enclosures			
- Silo	95-100	75 per ton of material stored	NA
- Vegetation wind break	30	45-425 per tree	NA
° Chemical stabilization	80-99	13,500+	$4.20 to 16.50/$10^3$ ft^2
° Precautions	30	NA	NA
Vehicular traffic	(See Section 2.1.1 Plant Roadways and Parking Areas)		
Load-out			
° Reclaimer systems	80-85	2-6 million[b]	NA
° Dust suppression (includes bucket reclaim system and spray)	95	75,000+	NA

[a] Reported overall efficiencies for various materials. Not tailored to any one type of material stored.

[b] Based upon a mobile stacker/reclaimer system.

single tree can range between 45 dollars for an 8 foot specimen to 425 dollars for a 25 foot specimen.[4]

Chemical stabilization - The act of using a substance to stabilize the surface of an aggregate storage pile is often referred to as "surface stabilization." This process binds the loose surface material into a solid, nonerodible crust through the use of a chemical crusting agent. Also, water (with or without a wetting agent) can be used to keep the surface moist and promote the adhesion of small particles to larger ones. In order to wet the surface of the pile, a system of towers, sprinklers and pipes must be constructed. The initial cost of this equipment has been estimated at approximately 13,500 dollars.[4] An estimate of spray and application costs can be determined through Table 2.1.2-7. The control efficiency of a spraying system is given to be approximately 80 percent using water and up to 99 percent when chemical agents are used.[4]

Precautions - The lowering of the storage pile height takes advantage of the fact that wind speed generally increases with height above ground level. Lower storage piles result in lower surface wind speeds which result in reduced wind erosion. The maintenance of low storage piles can not be directly associated with any change in cost. An estimated control efficiency of 30 percent is assigned to this technique.[4]

Techniques, Efficiencies and Costs for Controlling Fugitive Dust from Vehicular Traffic Around Storage Piles

The requirements for controlling fugitive dust from unpaved access roads on or near aggregate storage piles is not unlike the

requirements for other unpaved plant roadways. The reader is referred to Section 2.1.1, Plant Roadways and Parking Areas, for a discussion of controlling dust from unpaved plant surfaces.

Techniques, Efficiencies, and Costs for Controlling Fugitive Dust from Storage Pile Load-Out

The control techniques for reducing dust from load-out activities include the use of reclaimer systems and dust suppressants.

The load-out of material from storage piles can be accomplished with the use of either front-end loaders or reclaiming systems. The reclaiming of material from storage piles is accomplished by use of underground conveyors and raking or bucket equipment. In either of these cases the reclaimer systems minimize the amount of fugitive dust generated during load-out operations (as compared to a front-end loader).

Rake reclaimers move along the surface of the pile directing material toward an underground conveyor system. The bucket system consists of a bucket wheel which moves along the pile perpendicular to its face. The buckets move material from the pile surface onto a conveyor. The reclaiming system may also be passive in nature, in which case material is fed to the conveyor beneath the pile by gravity alone.

The control efficiencies for these systems (as compared to a front-end loader) are 85 percent for the rake reclaimer and approximately 80 percent for the gravity feed and bucket reclaimer.[4,8] Reclaiming systems will vary greatly in cost depending upon the type of system chosen and the desired design

capacity. Initial costs of a mobile stacker/reclaimer system range between 2 and 6 million dollars.[4]

The mechanism behind dust suppression is similar in nature to chemical stabilization. The technique consists of the application of water or chemical wetting agents to the storage pile prior to disturbance by load-out equipment. This technique can include simple surface spraying of the pile, or the use of a specialized spray system which wets the storage material as it is being disturbed. The control efficiency of wetting the pile surface prior to disturbance (by a front-end or reclaimer) is not documented in the literature. The actual efficiency is assumed to be low. The control efficiency of a bucket wheel reclaimer with spray system (as opposed to a front-end loader alone) is estimated to be 95 percent.[4] The estimated cost of a spray system for use with an existing mobile bucket wheel reclaimer is at least 75,000 dollars.[4] No annual operating cost estimates are available.

RACM selections for storage piles must be made on a site specific and material basis. Some materials are amenable to wet control techniques with no effects on material quality, while others cannot tolerate increased moisture. RACM for a specific site should also be made by evaluating the severity of the emissions and the costs for the various control alternatives. Specific RACM selections are made for storage activities of various materials in the later industry-specific sections.

REFERENCES

1. Compilation of Air Pollutant Emission Factors, Supplements 1-8. U.S. Environmental Protection Agency, Office of Air and Waste Management and Office of Air Quality Planning and Standards. Research Triangle Park, North Carolina. August 1977.

2. Cowherd, C., Jr., K. Axetell, Jr., C.M. Guenther, and G.A. Jutze. Development of Emission Factors for Fugitive Dust Sources. Midwest Research Institute, Kansas City, Mo. Prepared for the Environmental Protection Agency, Research Triangle Park, North Carolina. Under Contract No. 68-02-0619.

3. Thornthwaite, C.W. Climates of North America According to a New Classification Geograph. Rev. 21:633-655, 1931.

4. Bohn R., T. Cuscino, Jr., and C. Cowherd, Jr. Fugitive Emissions from Integrated Iron and Steel Plants. Midwest Research Institute, Kansas City, Mo. Prepared for U.S. Environmental Protection Agency, Research Triangle Park, North Carolina. EPA 600/2-78-050. March 1978.

5. Seelye, E.E. Design-Data Book for Civil Engineers. Vol. 1. John Wiley and Sons, Inc. New York. 1960.

6. Local Climatological Data-Annual Summary with Comparative Data. National Climatic Center. Asheville, North Carolina. 1975.

7. Surface Weather Observations-Hourly Observations. Forms MF1-10A, 10B. National Weather Service. Asheville, North Carolina.

8. Technical Guidance for Control of Industrial Process Fugitive Particulate Emissions. PEDCo Environmental, Inc. Prepared for U.S. Environmental Protection Agency, Research Triangle Park, North Carolina. EPA-450/3-77-010. March 1977.

9. Nevada Particulate Control Study for Air Quality Maintenance Areas. Task B Report, Factors Influencing Emissions from Fugitive Sources. PEDCo Environmental, Inc. Cincinnati, Ohio. 1976.

10. Cowherd, Chatten, Jr., T. Cuscino, Jr., and D.A. Gillette, Development of Emission Factors for Wind Erosion of Aggregate Storage Piles. Presentation at the 72nd Annual Meeting of the Air Pollution Control Association. Cincinnati, Ohio. June 1979.

11. Sax, Irving W. Dangerous Properties of Industrial Materials. 5th Ed. Van Nostrand Reinhold Co. N.Y., N.Y. 1979.

12. Croww, F.L., Jr. and G.D. Forehand, Air Pollution Emissions from Bulk Loading Facilities, Vol. 6, Environmental Nomograph Series. Technomic Publishing Co., Inc. Westport, Connecticut. 1975. pp. 3-4.

13. Simon, Jr., Product Specification Sheets. Apollo Technologies. Englewood, Ohio. August 1979.

2.1.3 Material Handling

2.1.3.1 Source Description--

Material handling is the description given to the movement of raw process materials from receiving sites (truck depots, vessel docking facilities and rail spurs) to industrial storage sites (aggregate storage piles or silo enclosures) or directly to process operations, the transfer of materials between process operations, and the transfer of products to storage or shipment. The actual material handling is a combination of unloading, transfer, and conveying operations. These three types of operations are common to virtually all process industries. A pictorial representation of these operations is given in Figure 2.1.3-1. This figure depicts the relative position of each material handling operation within a hypothetical industrial setting.

The unloading operations are presented in this section according to the transportation mode of the vehicle being unloaded (truck, vessel or rail car). The types of unloading operations frequently associated with material handling are: dumping by truck; crane-clamshell and bucket ladder removal from vessels; and side dumping, rotary dumping, bottom dumping and pneumatic removal of material from rail cars.

The transfer and conveying of material are accomplished with belt conveyors, screw conveyors, bucket elevators, vibrating conveyors and pneumatic equipment. The actual loss of material or the generation of dust from material handling will occur at

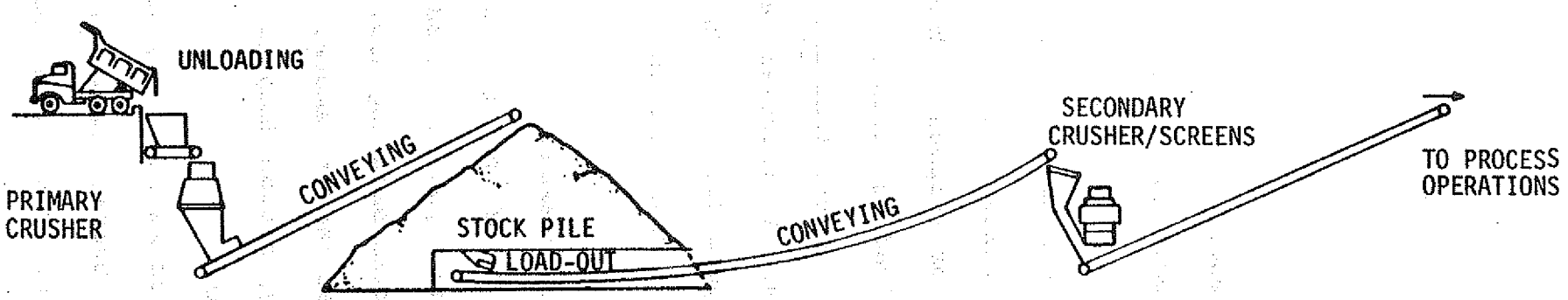

Figure 2.1.3-1. Typical materials handling operation.

the feeding, transfer, and discharge points along the system. Review of the literature indicates that a majority of the material loss generated is due to spillage and is superseded by wind erosion only when the handling system is improperly enclosed.[1]

2.1.3.2 Fugitive Dust Emission Factors--

The fugitive dust emissions generated from the handling of process materials vary depending upon the method of unloading or transferring used and the type of material being handled. In most cases, the available emission factors for material handling are based upon engineering judgment or limited on-site measurements. Table 2.1.3-1 presents the available emission factors for unloading of material. Table 2.1.3-2 gives the emission factors for the conveying and transfer of material. In using these factors for materials not listed, it is best to select the factor for the listed material that would most likely have similar properties to the material in question.

2.1.3.3 Particle Characterization--

Particle Size, Density and Composition--The particulate size of fugitive dust generated from material handling operations can be considered not to vary with the type of aggregate material in storage. It can be assumed that the size distribution of the dust will be somewhat independent of the type of material being handled, because the surface condition of the transported material (crusted or aggregated versus fine or disaggregated) will

TABLE 2.1.3-1. EMISSION FACTORS FOR THE UNLOADING OF MATERIAL

Vehicle	Method of unloading	Material unloaded	Uncontrolled emission factor (lb/ton of material unloaded)	Reliability
Truck	° Dumping	Aggregate	0.02[a]	D
		Rock and gravel	0.04[a]	E
		Granite	0.00034[a]	E
		Grain	2-8[b]	D
			0.64[c]	B
Vessel	° Crane-clamshell bucket	Grain	3-8[b]	D
	° Bucket ladder	d	d	
Rail	° Side dump	d	d	
	° Rotary dump	d	d	
	° Bottom dump	Taconite pellets	0.03[b]	E
		Coal	0.4[b]	E
		Grain	3-8[b]	D
			1.30[c]	B
	° Pneumatic	d	d	

[a] Reference 5, pages 37-40.

[b] Reference 2, page 2-17.

[c] Reference 3, page 12.

[d] Data not available.

TABLE 2.1.3-2. EMISSION FACTORS FOR THE CONVEYING AND TRANSFER OF MATERIAL

Material handling operation	Material being handled	Uncontrolled emission factor (lb/ton handled)	reliability
Conveying and transfer	Coal	0.04 - 0.96[a]	E
		0.02[b]	D
		0.02[e]	E
	Coke	0.023 - 0.13[a]	D
	Grain	2.0 - 4.0[a]	E
		0.11 - 1.40[c]	B
	Granite	Negligible[b]	E
	Iron ore	2.0[a]	E
		0.046[c]	E
	Lead ore	1.64 - 5.0[a]	E
	Sand	0.3[a]	E
Transfer (only)	Coal (spillage)	0.8[c,d]	E

[a] Reference 2, p. 2-7.

[b] Reference 1, page 3-42.

[c] Reference 3, page 12.

[d] Value includes dust and large aggregate, much of which will never be suspended.

[e] Reference 5, pages 44-47.

influence the final size distribution found in the fugitive dust emissions[2,3] (see Table 2.1.2-6, column b).

The density and composition of the fugitive emissions from material handling activities will be directly related to the type of material involved.

Hazardous or Toxic Nature of Fugitive Emissions From Material Handling Activities--The hazardous or toxic nature of fugitive emissions from material handling activities is almost entirely dependent upon the type of material being handled. As in the case of particulate characteristics, it is not possible to discuss the nature of a health hazard without first knowing the material in question. The hazardous properties of specific industrial materials can be found in Reference 4.

Data Availability--Review of the literature has produced only two examples of particulate size distribution for aggregate material that would be unloaded or transported by a material handling system (see Table 2.1.2-6). Knowledge of exactly what portion of the fugitive emissions from other handling operations will remain in suspension is needed. A few of the conveying and transfer emission factors are indicated as including large portions of "spillage," material which is much too large to ever become suspended.

2.1.3.4 Control Methods--

The control methods available for reducing fugitive dust from material handling activities are specific to the site of dust release, i.e., the site of unloading, conveying operations,

or points of transfer. The control methods, efficiencies and costs discussed in this section will be addressed according to the individual sites of dust generation.

Techniques, Efficiencies and Costs for Controlling Fugitive Dust From Unloading Activities--The minimization of dust from unloading activities can be accomplished through 1) the total or partial enclosure of the unloading facility and the removal of the particulate to a bag filter system, 2) enclosure without bag filter system, and 3) use of a water or chemical spraying system.[1,5]

The control of fugitive dust from truck dumping activities can be accomplished with either the enclosure or spray system techniques. The application of control practices to truck dumping sites are dependent largely on the industry or material involved. A 90 to 95 percent reduction of fugitive dust from truck dumping activity can be accomplished when the site is enclosed and the captured particulate is vented to a control device.[5] A 50 percent control efficiency can be achieved with a water spray system.[5] Cost estimates for these spray systems were not available.

Fugitive dust emissions can be controlled through the enclosure of rail car unloading stations accompanied by dust collection with bag filters. This method of control can effectively reduce 99 percent of the fugitive dust. This type of system is estimated to have an initial cost of approximately $120,000.[1] No annual operating costs are available. Depending on the type of

material involved, fugitive dust from rail car unloading operations can also be controlled using spray systems. This measure results in an effective control efficiency of 80 percent at an annual cost of $37,000.[1] The use of chemical stabilizers may improve the efficiency of this control measure. The addition of chemicals to the spray system, however, will increase the cost of operation (see Table 2.1.2-7).

Data on dust suppressants, their costs, and application rates are presented in Appendix B.

Techniques, Efficiencies, and Costs for Controlling Fugitive Dust From Conveying and Transfer Activities--The control of dust from conveying and transfer operations can be accomplished through methods similar to those used during unloading operations. Conveying or transfer emissions can be minimized through the use of enclosures or spray systems. Enclosure of conveying systems can be either partial (top) or total. The control efficiency of a partial enclosure system is rated at 70 percent with an initial cost of $43.00 per foot of conveyor.[1] The total enclosure of a conveying system which includes the use of a dust collection system, e.g., bag filter, can result in a control efficiency increase to 99 percent with an initial cost of $86.00 per foot of conveyor.[1] No annual operating costs were available for either of these control measures.

Transfer stations located along the course of a conveying operation can be significant sources of fugitive dust. The control of dust from these sources is also accomplished using

enclosures and/or spray systems. The total enclosure of a transfer point can effectively reduce fugitive emissions by 70 percent at an initial cost of $3,700.[1] The addition of a bag filter to a transfer point enclosure can raise the control efficiency to approximately 99 percent. This additional equipment will increase the initial cost to approximately $22,000.[1] Effective control of dust from transfer stations can also be accomplished using water and chemical spray systems. The spray system has an added advantage in that the aggregate subject to chemical spray is adequately treated to effect dust suppression throughout the entire material handling system. The control efficiency of spray systems at transfer points is estimated to be between 70 and 95 percent.[1] The initial cost of implementing a spraying system for a single transfer point is approximately $18,000. The cost of one multiple system was estimated at $245,000 (based on a plant handling 2.2 million tons of material a year). The annual operating cost of a single transfer station ranges between 0.02 to 0.05 dollars per ton of material handled.[1] PEDCo estimates that the capital costs for a system such as shown in Figure 2.1.3-1 is approximately $70,000, with annualized costs of $23,700.

A summary of the control measures for unloading, conveying, and transfer operations is presented in Table 2.1.3-3.

Reasonably Available Control Measures (RACM) for material handling operations must, of course, be site specific and material specific. In most cases, where the material characteristics will not suffer from increased moisture content, water or

TABLE 2.1.3-3. A SUMMARY OF CONTROL TECHNIQUES, EFFICIENCIES, AND COSTS FOR FUGITIVE EMISSIONS FROM UNLOADING, CONVEYING, AND TRANSFER OPERATIONS

Control method	Estimated control efficiency, %	Initial cost (1980 dollars)	Annual cost (1980 dollars)
Unloading			
Truck			
° Enclosure			
- total with fabric filter	95	76,000[a]	17,000[a]
- partial with fabric filter	90	50,000[a]	12,500[a]
° Spray system-water	50	b	b
Vessel			
° Enclosed bucket elevator leg, vent to fabric filters	95	51,600[a]	11,600[a]
Rail			
° Enclosures			
- total with fabric filter	99[c]	120,000[d]	b
- total without fabric filter	70	b	b
° Spray systems with chemicals	80	37,000[d]	b
Conveying			
° Partial (top) enclosure	70[e]	43/ft[d]	b
° Total enclosures	99[f]	86/ft[d]	b
Transfer			
° Enclosures	70 - 99[g]	4,000 to 22,000[d]	b
° Spray systems with chemicals	70 - 95	18,000 to 245,000[d,h]	0.02 to 0.05 per ton of material treated[i]

[a] Reference 6, pages 6-23 through 6-75.

[b] Unavailable.

[c] Enclosure is accompanied with high efficiency (99+%) bag filter.

[d] Reference 1, page 6-3.

[e] "Weather-tight" system; no active dust collection system.

[f] Value utilized active dust collection system.

[g] Lower value represents simple enclosure; high value includes bag filter.

[h] Lower value represents cost of control at a single transfer station; high value represents total cost for a large multiple transfer station system.

[i] Annual cost applies to single transfer station only.

chemical sprays offer good control efficiencies at reasonable costs. However, where material characteristics or specifications preclude wetting, the emissions should be controlled by enclosure and ventilation to a fabric filter. Again a case-by-case assessment must be made to ascertain the severity of the emissions and the relative economics of control. Details on RACM selections for specific materials and operations are presented in the industry-specific sections of this report.

Benefits of Control Measures--Material handling operations move what is usually considered to be a "valuable" commodity from one point to another within a given industrial setting. Because the material has been acquired at some cost to the industry, the loss of a portion of this material constitutes an expensive waste. In some cases, e.g., grain elevators, the cost of installing collection devices can be partially offset by the market value of the material which has been captured. This type of side benefit associated with collection devices may have applications in a number of other industries.

REFERENCES

1. Bohn R., T. Cuscino, Jr., and C. Cowherd, Jr. Fugitive Emissions from Integrated Iron and Steel Plants. Midwest Research Institute, Kansas City, Mo. Prepared for U.S. Environmental Protection Agency, Research Triangle Park, North Carolina. EPA 600/2-78-050. March 1978.

2. Technical Guidance for Control of Industrial Process Fugitive Particulate Emissions. PEDCo Environmental, Inc. Prepared for U.S. Environmental Protection Agency, Research Triangle Park, North Carolina. EPA-450/3-77-010. March 1977.

3. Source Test Evaluation for Feed and Grain Industry. Midwest Research Institute, Kansas City, Mo. Prepared for U.S. Environmental Protection Agency, Research Triangle Park, North Carolina. PB-262-626. December 1976.

4. Sax, Irving W. Dangerous Properties of Industrial Materials. 5th Ed. Van Nostrand Reinhold Co. N.Y., N.Y. 1979.

5. Evaluation of Fugitive Dust Emissions from Mining. PEDCo Environmental, Inc. Prepared for U.S. Environmental Protection Agency, Cincinnati, Ohio.

6. Standards Support and Environmental Impact Statement Vol. I: Proposed Standards of Performance for Grain Elevator Industry. U.S. Environmental Protection Agency, Research Triangle Park, North Carolina. January 1977.

2.1.4 Mineral Extraction

Mineral extraction (mining) operations generate large amounts of fugitive dust. The fugitive dust emissions associated with these activities are in addition to the emissions from the ore beneficiation process. The fugitive dust sources vary depending on the method of extraction, which is often dependent upon the type of mineral to be removed. Table 2.1.4-1 lists the major types of minerals mined in the State of Ohio.

2.1.4.1 Source Description--

Eleven mineral extraction operations that have been identified as generating fugitive dust are listed in Table 2.1.4-2. Six of these fugitive sources are treated in one or more of the other sections of this report. Five sources are discussed in this section. The five fugitive dust sources specific to mining are 1) overburden removal, 2) drilling and blasting, 3) off-highway truck loading, 4) waste disposal, and 5) reclamation. The following descriptions of the mining operations are general in nature. Site specific operations may vary from these descriptions.

Overburden removal--Overburden removal consists of those activities performed to remove material overlying a mineral deposit. An operation of this type includes the reduction of surface plant life and removal of top soil, subsoil, and other undesirable strata. Overburden removal is most often associated with surface (strip and pit) mining operations.

TABLE 2.1.4-1. MINERAL MINING IN OHIO[1]

Mineral	Mining method	Quantity (10^6 short tons)
Coal	Surface	24.8
	Other[a]	22.0
Clay and shale	Surface	2.7
	Underground	0.7
Limestone and dolomite	Surface	44.0
	Underground	0.9
Other stone[b]	Surface	1.4
Sand and gravel	Surface	37.2
Salt	Underground	5.1

[a] Includes underground, auger, and strip-auger mines.

[b] Includes sandstone and quartzite.

TABLE 2.1.4-2. REVIEW OF FUGITIVE DUST FROM MINERAL EXTRACTION INDUSTRY

Source description	Section of guideline containing source information
Overburden removal	Section 2.1.4
Drilling and Blasting	Section 2.1.4
Truck loading	Section 2.1.4
Haul roads	Section 2.1.1
Truck dumping	Section 2.1.3
Crushing	Sections 2.18, 2.19
Transfer and conveying	Section 2.1.3
Cleaning	Sections 2.18, 2.19
Storage	Section 2.1.2
Waste disposal	Section 2.1.4
Reclamation	Section 2.1.4

Three methods of strip mining are practiced in the United States; area, contour, and auger.[2] Area strip mining is performed on flat terrain. Trenching equipment removes overburden from the strip of land presently being worked, depositing it in the trench left by the previous stripping operation. Only the initial stripping operation produces overburden which requires disposal or storage. Figure 2.1.4-1 gives a pictorial representation of overburden removal during area strip mining.

The second stripping method, contour mining, is employed when the land has a slope greater than 15 degrees. Contour stripping is the excavation of a hillside to form a level platform or "bench". One side of the bench runs along the exposed wall of the hill. The opposite side faces the downslope of the hill. Overburden is removed from the present bench excavation and deposited (or backfilled) into the previously worked area. This operation (bench excavation, mineral extraction, backfill) continues up the slope until the desired mineral deposit has been removed. The initial stripping operation produces the only overburden requiring storage or disposal. This excess overburden has to be moved to a level storage area. Overburden remaining on the downslope of a hill increases the potential for landslide. Figure 2.1.4-1 gives a pictorial representation of overburden removal during contour mining.

The third stripping method, auger mining, uses large drills (augers) to pull minerals from horizontal deposits. This technique is usually done in conjunction with contour mining. Contour mining transforms the hillside into a series of benches. The

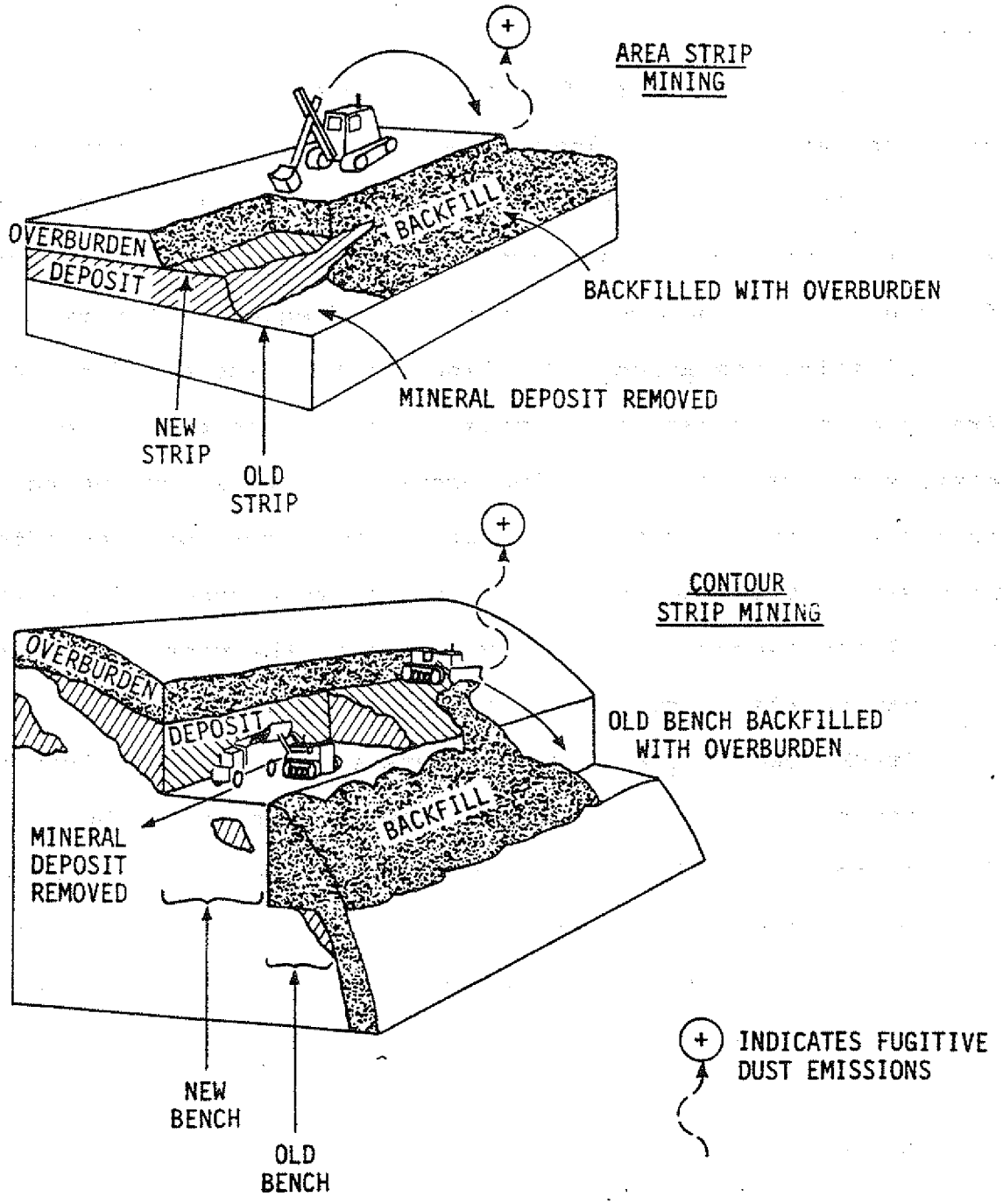

Figure 2.1.4-1. Overburden removal operations for area and contour strip mining.

auger then extracts the exposed mineral seams on each bench. The handling of overburden is the same as during a contour mining operation.

A fourth type of surface mining, open pit mining, requires very limited (one-time) overburden removal. The overburden material is usually removed and transported to an off-site storage area until reclamation activities begin. Overburden removal for open pit mining operations is an infrequent activity.

Blasting operations--Drilling and blasting are done to fracture hard, consolidated material so it can be more easily and efficiently removed. Blasting operations are a routine part of open-pit mining or quarrying, but are performed only as often as necessary. Blasting is usually limited to a once-a-day activity in isolated,temporarily inactive areas of the mine. This is done to minimize the disruption of other mining activities.

Truck loading operations--Minerals or overburden from surface mining will at some point be loaded onto off-highway trucks for transport. Although conveyor systems are often employed in place of trucks, mining operations dealing with coal, stone, gravel, and clay very often use dump trucks. Truck loading is usually performed using crawler-mounted shovels or front-end loaders.

Waste disposal operations--Large amounts of waste material are generated during the mining and benefication of minerals. Examples of waste material from mining operations are low-grade ore, slack coal, extraneous unmarketable rock, tailings, and mud slime. Waste material having the same characteristics as the

mineral being mined can be disposed of as backfill. Other waste material may be in slurry form and require disposal in holding ponds. Waste disposal operations are distinguished from overburden disposal, because in most cases disposed waste is not reclaimed.[2]

Land reclamation--Surface mining will cause considerable alteration of the land at the mining site. Effective reclamation should include a preplanned program which allows the reclaiming practice to become a concurrent part of daily mine operations. An effective program should also allow for segregation of the strata within the overburden into different quality materials. Placement of topsoil, sub-soil, and inferior material into separate storage promotes proper backfill practices. If properly stratified (topsoil, over subsoil, over inferior fill), a reclaimed mining area will accept revegetation.

2.1.4.2 Fugitive Dust Emission Factors--

Fugitive dust is generated at each of the mineral extracting sources. In many instances a single mine may have more than one source of fugitive dust associated with it. The fugitive dust emission factors available for the mineral extraction industry are presented according to their specific source of generation.

Fugitive dust emission factors for overburden removal--Two primary fugitive dust sources are associated with overburden removal: 1) dumping of dragline buckets or shovels into adjacent trenches or 2) removal and transfer of soil with scrapers and bulldozers. Specific sampling has not been performed on either

TABLE 2.1.4-3. FUGITIVE DUST EMISSION FACTORS FOR OVERBURDEN REMOVAL OPERATIONS

Description of overburden removal	Fugitive dust emission factor		Reliability rating
	Uncontrolled	Controlled	
Area stripping[a] (undetermined)	0.002 lb/ton coal mined		D
Area stripping[b] (with scraper)	0.004 lb/ton of overburden removed		E
Area stripping[b] (with dragline)	0.05 lb/ton of overburden		E
Area stripping[c] (with dragline)	0.173 lb/ton of overburden		E
Contour stripping[a]	0.003 lb/ton coal mined		D
Unspecified[d]	0.26 lb/ton coal mined	0.009 lb/ton coal mined[e]	E

[a] Nationally averaged emission factor, Reference 2, page 21.

[b] North Dakota lignite surface mine, Reference 2, page 22.

[c] 0.173 lb/ton or 0.38 lb/yd^3 of overburden represents combined emission rates of four Western coal mines in Colorado, Wyoming, Montana, and North Dakota, Reference 3, page 2.

[d] Mining practices in the Southwestern United States, Reference 2, page 22.

[e] Control measure is a water spray system, and represents a 95 percent reduction in fugitive dust, Reference 2, page 22.

of these sources; however, estimates of the source emissions are available. Table 2.1.4-3 lists the available fugitive dust emission factors for overburden removal. The removal of overburden has been cited as the largest source of fugitive dust at a mineral mining facility.[2] However, quantifying the actual degree of dust generation has been difficult.

The conclusion drawn from the major references cited in this section[2,3,4] is that dust emissions from overburden removal activities vary with the composition, texture, and moisture content of the overburden material. The overburden removal emission factor will also vary depending on the excavation procedures and type of earthmoving equipment used. Although many site specific variables affect the overburden removal emission factor, the emission rate for any specific mine is more closely related to the amount of overburden moved.[2]

The applicability of most of the emission factors in Table 2.1.4-3 toward Ohio mining operations is questionable, because they were determined for western mining operations. The two emission factors determined as national averages [area stripping (undetermined) and contour stripping] are probably more applicable to Ohio mining conditions.

Fugitive dust emission factors for drilling and blasting operations--

Fugitive dust emissions from drilling operations have been quantified by sampling at various mining operations. An emission factor of 0.008 pounds per ton of material quarried was found by sampling at one granite quarry.[2] Another sampling study at two

western coal mining operations revealed emission factors of 0.22 pounds per hole drilled in a coal deposit and 1.5 pounds per hole drilled for overburden.[3]

Estimating fugitive dust emissions from blasting operations is a difficult procedure. The nature of blasting prevents monitoring equipment and manpower from being placed close to the dust source. The elevation of large amounts of normally non-suspendible matter inhibits accurate visual estimates of the dust potential. Much of the material propelled into the air from a blast will not remain suspended for more than a few seconds.

The emission estimates given in Table 2.1.4-4 express the wide variety of values possible in blasting operations. Although it appears that fugitive dust from blasting operations would be the major source of particulate at mining sites, the actual time weighted contribution may be quite small due to the intermittent blasting schedule.

Fugitive dust emission factors for truck loading operations--Dust is generated by the dumping of mineral ores from the shovel bucket into the waiting haul truck. Independent estimates of dust emissions from this source vary over a wide range. This variability can be attributed to differences in the moisture content and amount of fines in the material being hauled. It is also suspected that the dust emission rate will vary according to the types of equipment involved and the climate conditions of the mining site. Table 2.1.4-5 lists the estimated fugitive dust emission factors available for truck loading operations at mineral mining sites.

Fugitive dust emission factors from disposal of wastes--The activities associated with waste disposal are not unlike the other activities found within a mining operation. Fugitive dust generated from these sources can be estimated using the same procedures described for the other mining activities. As an

TABLE 2.1.4-4. FUGITIVE DUST EMISSION FACTORS FOR DRILLING AND BLASTING OPERATIONS

Description of operation	Uncontrolled suspended particle emission rate	Reliability rating
Overburden blasting[a]	58.5 lb/blast	E
Deposit blasting		
Coal[a]	49.8 lb/blast	E
Other[b]	0.001-0.16 lb/ton of ore or stone mined	E
Drilling		
Granite[c]	.008 lb/ton material quarried	E
Coal[d]	.22 lb/hole drilled (in coal)	E
	1.5 lb/hole drilled (in overburden)	E

[a] Determined from measurements made at four Western coal mining sites, Reference 3, page 69.

[b] Lower value represents blasting at a Western copper mine; the higher value represents blasting a granite quarry, Reference 2, pages 26-27.

[c] Reference 3, page 2.

[d] Reference 2, page 25.

TABLE 2.1.4-5. FUGITIVE DUST EMISSION FACTORS FOR TRUCK LOADING OPERATIONS

Description of truck loading operation	Uncontrolled emission rate, lb/ton loaded	Reliability rating
Crushed rock (front-end loader)	0.05	E
Lignite coal[a] (shovel)	0.02	E
Coal[b] (shovel)	0.05	E
Coal[c] (shovel)	0.10	E
Coal[d] (shovel)	0.04	E
Granite[c] (unspecified)	Negligible	E

[a] Lignite coal from North Dakota mining sites, Reference 2, page 31.

[b] Coal from Colorado mines, Reference 2, page 31.

[c] Unspecified location, Reference 2, page 31.

[d] Coal from Colorado mining operations, Reference 3, page 69.

example, truck loading of waste material for transport to a dumping site will produce dust emissions very similar to truck loading of the mineral for transport to beneficiation processes. The dust sources associated with waste disposal are truck loading (Section 2.1.4, Mineral Extraction, Fugitive Dust Emission Factors for Truck Loading Operations), transport of material on unpaved roadways (Section 2.1.1, Plant Roadways and Parking Areas), and dumping of haul trucks (Section 2.1.3, Material Handling). The only fugitive dust sources not previously addressed which require attention under this waste disposal section are those associated with berm or leach pad construction. Dust from these sources can be quantified using the heavy earthwork construction emission factor presented in Table 2.1.4-6.

Fugitive dust emission factors for reclamation activities--Area strip mine reclamation in Midwestern states poses the fewest reclamation problems. These lands can be returned to their original topography by soil segregation, backfilling and grading as deposits are removed. Compaction of the soil can be controlled with conventional equipment. Ground preparation for revegetation is aided by a climate that provides sufficient annual precipitation.

When continuous reclamation is practiced, earth moving by dragline and scrapers produces a large amount of fugitive dust. However, these emissions are already included as part of the overburden removal operation. If the topsoil is stored and later redistributed, or if a smaller dragline or bulldozer is used to

TABLE 2.1.4-6. FUGITIVE DUST EMISSIONS FOR HEAVY EARTHWORK CONSTRUCTION AROUND WASTE DISPOSAL SITES

Description of operation	Uncontrolled emission factor	Reliability factor
Heavy earthwork construction	1.2 ton/acre/month[a]	D

[a] The emission factor is presented in tons per acre of land exposed to construction per month of construction activity. This value was determined for a construction project operated at a "medium" level of activity, disturbing soil with approximately 30 percent silt content, and in a semi-arid climate (PE $\sim$ 50, see Figure 2.1.1-1). Although it would be useful to be able to adjust this emission rate (according to specific activity levels, soil silt contents, and climate) the test data used in its generation are not sufficient to determine the exact influence of each correction parameter (Reference 5, page 11.2.4-1).

grade the spoils area before applying the topsoil layer, emissions from these activities can be estimated with the same emission factors as applied to overburden removal.

All other emissions associated with the reclamation operation are due to wind erosion over the unreclaimed or partially reclaimed land. The United States Department of Agriculture's (USDA) wind erosion equation has been used in several recent studies to estimate emissions from wind erosion across cleared or unprotected soil surfaces. The wind erosion equation was originally developed to estimate soil losses from cropland, but has been adapted to predict the suspended particulate fraction of total soil losses and has been applied to evaluate exposed soil surfaces other than cropland.

$$EF = a\ I\ K\ C\ L'\ V' \qquad \text{Equation 1}$$

where:

EF = emission factor, ton/acre/yr,

a = portion of total wind erosion losses that would be measured as suspended particulate,

I = soil erodibility, ton/acre/yr,

K = surface roughness factor,

C = climatic factor,

L' = unsheltered field width factor, and

V' = vegetative cover factor.

In this equation, K, C, L', and V' are all dimensionless.

Some recent work has indicated that the variable "a", as well as "I", is related to soil type. Values for "a" and "I"

that might be applied to surface-mined areas during or following regrading are summarized in Table 2.1.4-7.

TABLE 2.1.4-7. SUMMARY OF VARIABLES FOR THE WIND EROSION EQUATION[6]

Surface soil type	a	I, ton/acre/yr (uncontrolled)
Rocky, gravelly	0.025	38
Sandy	0.010	134
Fine	0.041	52
Clay loam	0.025	47

Values of K can vary between 0.5 and 1.0, with 0.5 denoting a surface with deep furrows and ridges, which protect against wind erosion, and 1.0 denoting a smooth erodible surface. Unless the surface of a regraded spoil area has been plowed or roughened, a K factor of 1.0 should be used in the wind erosion equation.

Climatic factors (C) for use in the equation have been determined for most parts of the country by USDA, as shown in Figure 2.1.4-2 (the values in the figure should be multiplied by 0.01).[6] For exposed areas greater than about 2,000 ft wide, the field width (L) no longer affects the emission rate, and L' = 1.0. For smaller reclamation areas in irregular terrain where the field width is only about 1000 ft, the L' value is approximately 0.7. Because recently regraded surfaces have little or no vegetation, V' in the equation is almost always 1.0.

By substituting the appropriate data into the wind erosion equation, the annual emission rate for any specific situation can

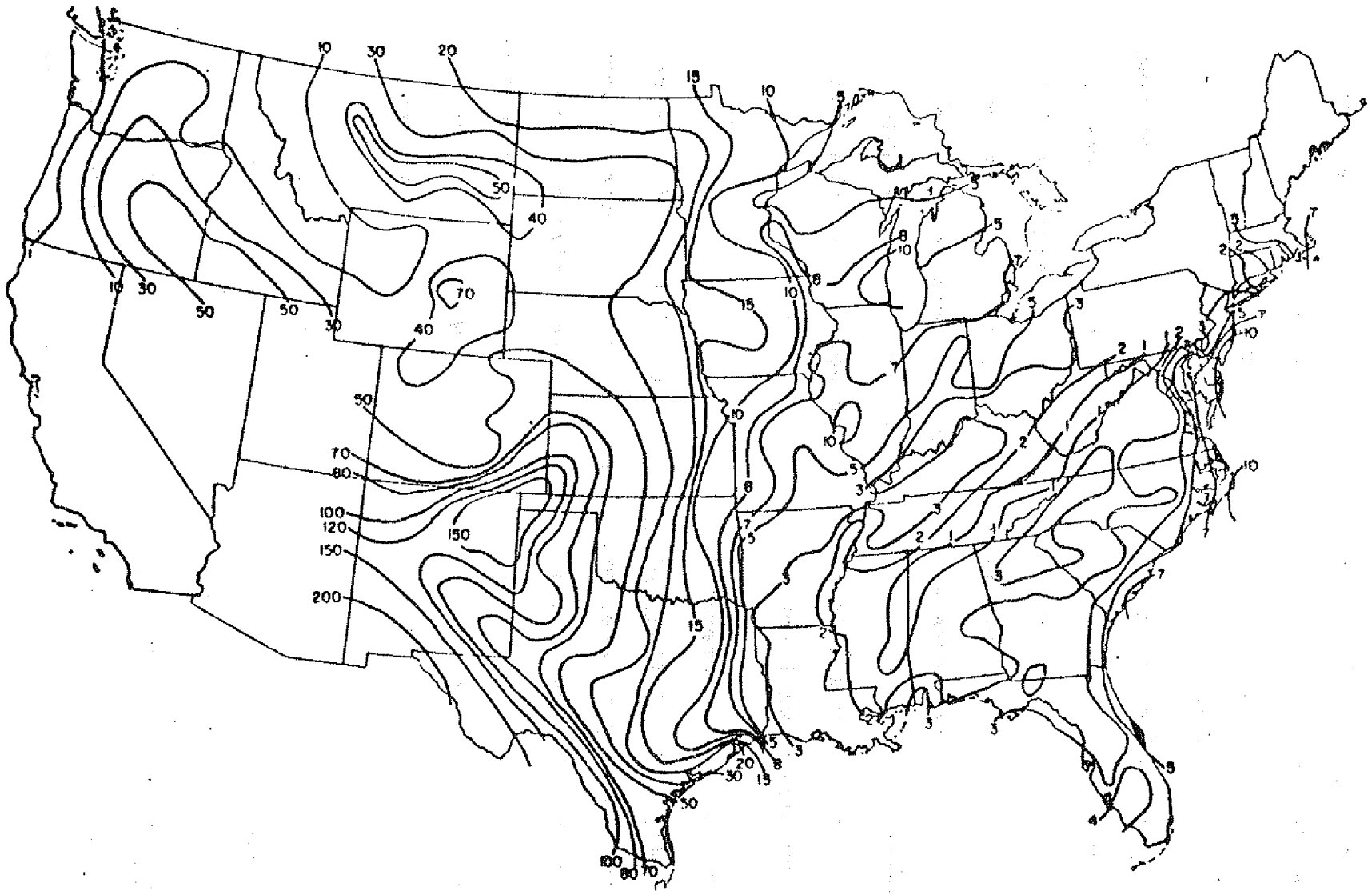

Figure 2.1.4-2. Climatic factors for use in the wind erosion equation.[6]

be calculated. This estimated emission rate (E) is then multiplied by the number of barren acres at the mine during a particular year to determine total fugitive dust due to wind erosion. For a more detailed explanation of the modified wind erosion equation, see Appendix A of Reference 6.

This method of estimating wind erosion emissions is acknowledged to have limited accuracy, but no other method has been proposed. All efforts to quantify wind erosion emissions that were found in the literature used some published USDA data on annual soil losses per acre as their basis. Because the wind-erosion emission rates per unit time are very low and highly variable, it is not possible to check the accuracy of the estimates by comparison with source sampling results.

2.1.4.3 Particle Characterization--

Particle size, density, and composition--The particle size distribution for any mineral extraction source is dependent upon the material being mined. The variation between size distributions of different minerals is not available. However, extensive particle size distributions for sources at a Western coal mining site has been measured. These size distributions are presented in Table 2.1.4-8.

The composition of fugitive dust from mineral extraction sources cannot be determined unless the composition of the mineral deposit and its overburden are known.

Hazardous or toxic nature of fugitive dust from mineral extraction activities--The health effects associated with particulate emissions from surface mining sources may be similar to

TABLE 2.1.4-8. PARTICULATE SIZE DISTRIBUTION FOR SELECTED MINE EMISSION SOURCES[a]

	Source description			
Size range, μm	Overburden removal, %	Truck loading, %	Exposed areas,[b] %	Other,[c] %
<3	5	4.5	5	5.5
3-30	7	8.5	8	9.5
>30	88	87	87	85

[a] Characteristic of five Western coal mines, Reference 3, page 5.

[b] Exposed areas, waste and reclamation area prior to revegetation.

[c] Other mining activities, excluding the three categories given above, viz., haul roads, truck dumping, and storage areas.

the effects of particulates from other fugitive dust emission sources (see Section 2.1.1). Neither type of particulate matter has been studied extensively enough to characterize its impact on public health or welfare. Urban particulates have been studied more extensively, and correlations between ambient particulate concentrations and morbidity and mortality rates have led to the establishment of ambient air criteria.

In the case of some fugitive dust source types for which emission factors have been derived, particle size determinations were made as part of the emission testing studies. A significant portion of the emissions for these sources were determined to be in the size range of particles that are transported outside of the source boundaries. If the mining operations in an area are substantial, and other types of industry are medium or light in comparison, then the emissions from the mining operations might be expected to have a considerable impact on the local air quality. Directional sampling and tracer studies could provide the necessary data to determine the total particulate impact from mining on regional health and welfare.[2]

Data availability--The description and quantification of fugitive dust from mineral extraction sources is incomplete when compared to the availability of information for other dust sources. No fugitive dust information was found specifically for Ohio mining operations. The majority of available data comes from the Western portion of the United States.

2.1.4.4 Control Methods--

The currently available control measures for mineral extraction are presented by fugitive emission source. The methods for controlling fugitive dust from mining operations have not been researched and developed appreciably; consequently, they are not extensively documented in the literature. The control methods identified are limited to some form or combination of three basic techniques: watering, chemical stabilization, and enclosure (in the form of wind barriers).

Overburden removal--Little information is available on control methods for reducing fugitive dust emissions from overburden removal activities. The minimization of disturbed land surface has been cited as a precautionary measure capable of reducing fugitive emissions from overburden removal operations.[4]

Wind erosion of exposed soil surfaces is a major source of dust at surface coal mines because of the number of large areas laid bare by the mining operations. Reducing the area exposed to the wind reduces the potential for windblown dust. No control efficiency or cost estimate values were given for this technique.

Drilling--There are several methods of controlling fugitive dust emissions from drilling operations. One such method is a water injection system, where water is injected into the drilled hole by using a piston pump. Another method employs a water ring which sprays a fine mist of water around the top of the drilled hole. Lastly, dust ejector systems are available, where compressed air is used to eject the dust particles from the hole and into a tube which takes the dust away from the drilling

area. A water spray or foam may be added in this tube for dust suppression, or a fabric filter may be used at the tube exit for more effective dust control.

The only available cost information for dust controls on drilling operations indicates that for a water injection system, the cost was $4,295 for one system and $5,170 for another. Comparable costs for a fabric filter collection system were given as $13,335 and $15,925.

Blasting--Review of the literature[2,4] indicates that two preventative methods are prescribed to reduce fugitive emissions from blasting operations.

1) Restricting the area to be blasted--Proper sequencing of blasts and judicious charge placement greatly reduce the outward flux of particulates during blasting. The area of mineral or overburden blasted during any one day is determined largely by the production schedule. At most coal mines, only enough deposit is blasted to meet each day's requirements. Because the blasting schedule is closely tied to overburden and mineral removal, there is little latitude in the total amount of area to be blasted. Consequently, there is no additional cost for this control measure.

2) Prevention of overshooting during blasting--Because of the cost of blasting materials, the charge needed for a particular blast sequence is calculated very carefully. In effect, the mine operators observe practices that prevent overblasting. Therefore, there is no incremental cost of this control measure.

Truck loading--A number of control measures are available for reducing fugitive dust emissions from truck loading activities. The control efficiencies and cost estimates for each method are individually addressed.

1) Preventing truck overloading--Preventing the overloading of haul trucks will reduce spillage and windage losses. The cost of implementing this measure consists of any inspection costs necessary to prevent overloading, and the added cost of additional trucks and drivers to haul the material.

In reality, this control measure may be counterproductive. Reducing the amount of coal in each truck means additional trucks have to be purchased or each existing truck has to make more trips to maintain the same production level. Consequently, any emission reduction realized by the control measure may be more than offset by the emission increase from the additional vehicle-miles travelled.

2) Enclosures and spray systems--Covering the load of ore or modifying the surface properties of the material controls fugitive dust while the truck is in motion. These methods prevent the slipstream from removing loose particles. In addition, enclosing or covering the material eliminates spills and possible reentrainment of the spilled materials.

At most large mines, the haul cycle is designed to use workers and equipment in a efficient manner. Adding an additional step in the cycle, such as covering or uncovering a truck, requires additional time and probably additional manpower.

No cost data could be found for covering or treating the minerals in haul trucks, only an estimate of cost could be made. The costs associated with covering haul trucks are dependent on the cost of the covering and the additional labor-related costs of handling the cover. One report indicates that the cost of tarpaulins ranges from $0.04 to 0.70 per square foot, and the incremental cost of the additional labor is about $3.50 per truckload of material.[4] The labor cost is based on an estimate of 10 to 20 minutes extra time required to affix and remove the cover. Assuming a 5 million ton-per-year operation, a fleet of 25 50-ton trucks with 200 square feet surface area each, labor at $3.50 per truck load, and $0.70 per square foot for tarpaulins, the cost of this measure would be $368,000 per year.

The comparable costs for a spray system are $65,000. This value is an estimate derived from chemical spray systems for coal railway cars.[4] It should be noted that no actual operating data were obtained for this control measure. Therefore, the actual cost of this measure for haul trucks may differ significantly from the estimate given. In addition, because of the mobile nature of the coal removal operation, this control measure may not be feasible for haul trucks or may have severe safety restrictions.

3) <u>Substitution of covered conveyor system for haul trucks</u>--The use of covered conveyors in place of transporting coal or other minerals and overburden by truck is an effective method of dust control, because travel on haul roads is a more significant source of dust than conveyors.

Although completely enclosed conveyor systems emit little dust, they have a high initial cost. The design constraints of the system are the significant variables in the cost of a conveyor. As an example, cost data obtained from one mine shows that the cost per linear foot for an overland conveyor ranges from $925 to $1,450.[4] The cost of covering this conveyor is $65 per foot. A range of costs for covering conveyors is reported to be $40 to $80 per foot in a recent publication. In addition, the cost of enclosing transfer points is about $3,500 for a single enclosure and up to $20,000 if that enclosure includes a baghouse.[4]

Waste disposal--Waste disposal operations consist of approximately four potential fugitive dust sources. They are truck loading, haul roads, truck dumping, and leach pad and berm construction controls. The first source, truck loading, has been treated in this section of the document under "Truck loading operations". Haul road dust controls are discussed in Section 2.1.1, "Plant Roadways and Parking Areas". Truck dumping controls are presented in Section 2.1.3 under "Material Handling". The only fugitive dust source not previously treated is leach pad and berm construction.

Leach pad and berm construction are activities associated with the building of waste ponds to hold benefication slurry. The construction activities are essentially an earthmoving operation. As a result, the source of fugitive dust and its method of control are very difficult to define. The literature did not address control measures specific for this source. However, it is expected that the same technique described for overburden removel may have a potential application.[4]

TABLE 2.1.4-9. A SUMMARY OF CONTROL TECHNIQUES, EFFICIENCIES AND COST FOR FUGITIVE EMISSIONS FROM MINERAL EXTRACTION ACTIVITIES

Emission source and control technique	Estimated control efficiency, %	Initial cost (1980 dollars)	Annual cost (1980 dollars)
Overburden removal			
° Minimizing area of disturbed land	NA	NA	NA
Drilling			
° Water injection	NA	4,700[a]	NA
° Dust ejection to fabric filter	NA	14,600[a]	NA
Blasting			
° Restricting area to be blasted	Not applicable	No cost	No cost
° Prevention of overshooting during blasting	Not applicable	No cost	No cost
Truck loading			
° Prevent truck overloading	Questionable	NA	NA
° Enclosure (covering)	85	0.04-0.70 sq ft[b]	3.50/truckload[b]
° Spray system	50	8500[b]	65,000/yr[b,c]
° Substitution of covered conveyor system for haul trucks	95-99	925-1450/ft[d]	NA
Waste disposal			
° Truck loading controls		(See above)	
° Haul roads controls	(Section 2.1.1 Plant Roadways and Parking Areas)		
° Truck dumping controls	(Section 2.1.3 Material Handling)		
° Leach pad and berm construction controls	NA	NA	NA

NA - Not available.

[a] Reference 4, page 45. Based on an average of the two cost figures given.

[b] Reference 5, pages 39 and 40.

[c] Operating and maintenance costs for one million ton per year facility.

[d] Reference 4, pages 40 and 41.

A summary of the control techniques, efficiencies and cost for fugitive emissions from mineral extraction activities are presented in Table 2.1.4-9.

Benefits of control measures--The control fugitive dust from mineral extraction activities does not provide obvious economic benefit to the industry. However, as in the case of dust from plant roadways and parking areas (Section 2.1.1) this control may have a few hidden benefits. The majority of the control measures cited for this section are, in the final analysis, merely "good" operating procedures. Minimizing the disturbed land and properly handling the soil and waste will in the long run insure easier and more successful, cost-effective land reclamation while reducing the particulate loading of the ambient air.

The RACM for mining activities should be selected on a site specific basis. However, generally the good operational practices applicable to each of the activities should be required on a routine basis.

REFERENCES FOR SECTION 2.1.4

1. Minerals Yearbook - Vol. II Area Reports: Domestic Bureau of Mines. U.S. Dept. of the Interior. 1975.

2. Evaluation of Fugitive Dust Emissions from Mining. PEDCo Environmental, Inc. Prepared for U.S. Environmental Protection Agency, Office of Research and Development, Cincinnati, Ohio. EPA-600/9-76-001.

3. Survey of Fugitive Dust from Coal Mines. PEDCo Environmental, Inc. Prepared for U.S. Environmental Protection Agency, Region VIII, Denver, Colorado, February 1978.

4. Cost Estimates for Monitoring, Modeling, and Fugitive Dust Controls for Surface Coal Mines. PEDCo Environmental, Inc. Cincinnati, Ohio. Prepared for the U.S. Department of the Interior, Washington D.C. July 1979. Draft.

5. Compilation of Air Pollutant Emission Factors Supplements Nos. 1-8. U.S. Environmental Protection Agency, Office of Air and Waste Management and Office of Air Quality Planning and Standards. Research Triangle Park, North Carolina. August 1977.

6. Development of Emission Factors for Fugitive Dust Sources. Midwest Research Institute, Kansas City, Missouri. Prepared for U.S. Environmental Protection Agency, Research Triangle Park, North Carolina. June 1974. EPA-450/3-74-037.

2.2 IRON AND STEEL MILLS

An integrated iron and steel mill has three major operational areas: coke production, iron production, and steel production. Fugitive emission sources, control techniques, and RACM for each of these areas are discussed in the following sections.

2.2.1 Coke Manufacturing

2.2.1.1 Process Description[1,2,3]--

Coke is the nonvolatile residue from the distillation of coal in the absence of air. The three processes available for coal distillation are the beehive process, the byproduct process, and the form coke process. Since the byproduct process accounts for more than 98 percent of the coke produced, only this process will be discussed.

The raw coal is pulverized to sizes from 0.006 to 0.125 inches and transferred to prepared coal storage bins. Coals with low, medium or high volatilities are blended, and oil or water may be added for control of the density of the coking coal. The mixture is then transported to the coal storage bunkers on the coke oven batteries. (The preheated coal coking process transfers blended coal to the preheater directly.)

A weighed portion or specific volume of coal is discharged from the coal bunker into a larry car, a vehicle fitted with coal hoppers that rides on top of the battery on a wide-gauge railroad track. The coal is transferred into the ovens from the hoppers through coal-charging ports in the top of the ovens. In a coke-oven battery there may be from 20 to 100 slot ovens arranged

side-by-side in a row, with common sidewalls. One oven is charged at a time such that the charges will be staggered throughout the day.

After charging, lids are placed on the ports for the duration of the 15 to 40 hour coking cycle. The shorter cycles are for production of blast furnace coke, and the longer cycles are for foundry coke. During a cycle the ovens are maintained at a temperature of approximately 1100°C (2000°F). Gases evolved during the heating are exhausted through flues or standpipes on each oven and collected in a large duct that extends the length of a battery (the battery main). These gases are piped through the main to the byproduct recovery plant where coal distillates such as tar, light aromatic compounds and ammonia are separated from the gas stream. The coke-oven gases leaving the byproduct recovery plant are used as fuel.

Upon completion of the coking cycle, doors are removed from each end of the oven and the incandescent coke is pushed into a hot-coke car by a large ram. The hot-coke car, or quenching car, transports the coke to a quenching tower, a chimney-like structure, in which the coke is deluged with water. The damp, quenched coke is then deposited onto a sloping wharf where it drains and cools to a uniform moisture content and temperature. The coke is then screened into three size ranges referred to as blast-furnace coke, nut coke, and breeze, which is the undersize. Some plants grind nut coke to make additional breeze for sintering operations; others sell it for use in the electric smelting of

alloys.

A process flow diagram for coke manufacturing is shown in Figure 2.2.1-1. Sources of fugitive emissions include coal unloading, coal storage, coal conveying and transfer, coal pulverizing and screening, charging, coking, pushing, quenching, and coke handling. Each of these potential process fugitive particulate emission sources is identified in the Figure. Plant roads, a dust source category common to all coke manufacturing plants, are not specifically included in Figure 2.2.1-1, but are addressed in Section 2.1.

2.2.1.2 Fugitive Dust Emission Factors

The estimated emission factors for the coke manufacturing fugitive particulate sources are summarized in Table 2.2.1-1.

Most of these emission factors are based upon multiple test data and are considered of average reliability (i.e.,a fair estimate is possible on a source specific basis).

The emission factors for coal unloading and transfer, conveying, pulverizing and screening operations are based upon data for crushed rock unloading and handing. These data were adjusted to account for size and moisture content differences between rock and coal and to derive more appropriate emission factors for coal. The reliability of these emission factors is considered very poor.

The emission factors for coal storage activities are based upon limited test data and engineering judgment. The reliability of these emission factors is poor.

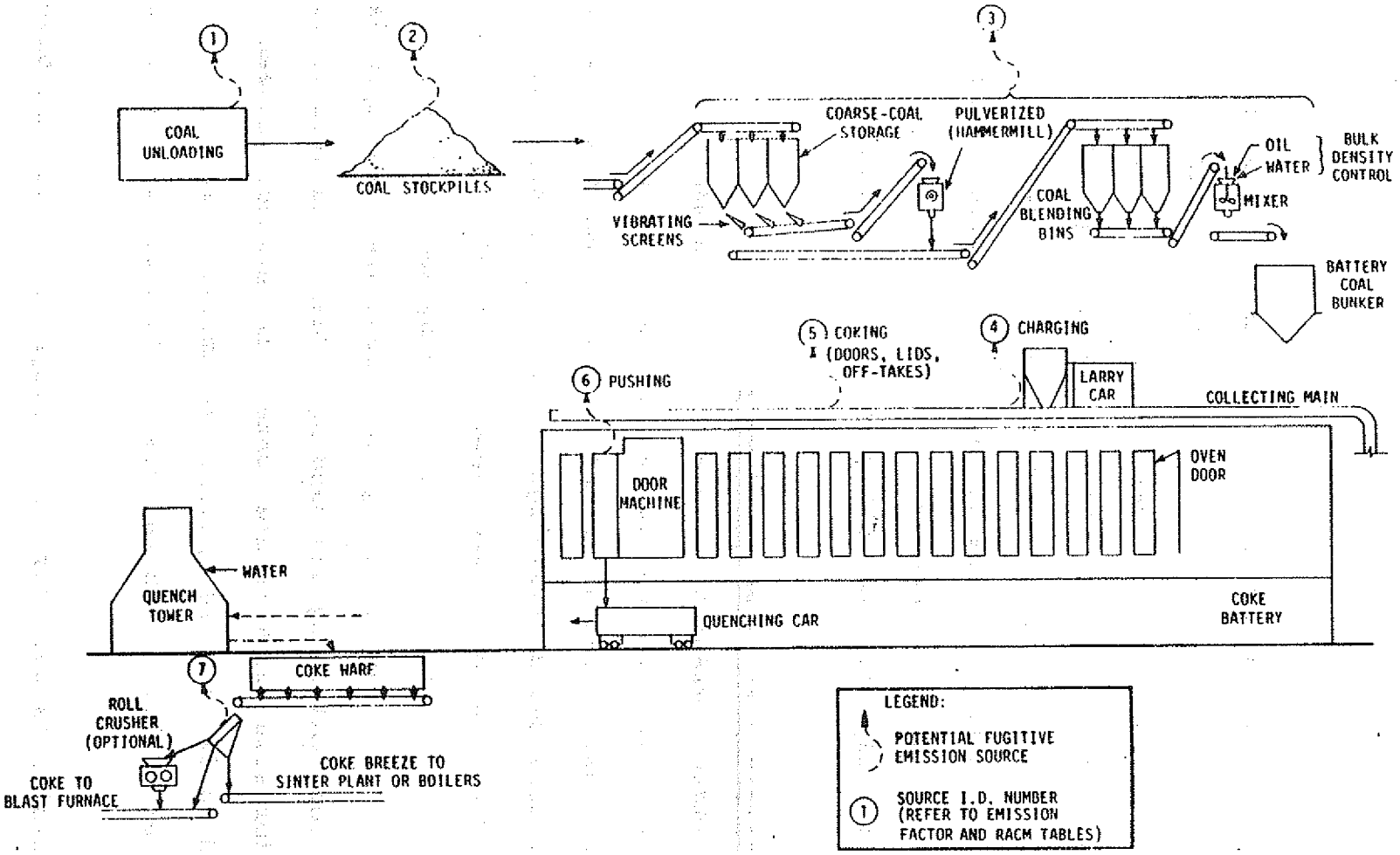

Figure 2.2.1-1. Process flow diagram of coke manufacturing and associated fugitive particulate emission sources.

TABLE 2.2.1-1 FUGITIVE DUST EMISSION FACTORS FOR COKE MANUFACTURING

Source	Emission factor	Reliability rating	Reference
1 Coal unloading	0.4 lb/ton coal unloaded	E	4
2 Coal storage			
Loading onto pile	0.08 lb/ton coal loaded	D	5
Vehicular traffic	0.16 lb/ton coal stored	D	5
Loading out	0.10 lb/ton coal loaded	D	5
Wind erosion	0.09 lb/ton coal stored	D	5
3 Coal conveying, transfer, pulverizing and screening	0.04 to 0.96 lb/ton coal processed	E	6
4 Charging	0.85 lb/ton coal charged	C	7
5 Coking (doors, off-take piping and lids)	0.51 charged lb/ton coal charged	D	7
6 Pushing (uncaptured plume)			
Green coke	3.0 to 4.0 lb/ton coal charged	C	8
Moderately green	2.1 lb/ton coal charged	C	9
Clean coke	0.47 lb/ton coal charged	A	7
7 Coke handling	0.023 to 0.13 lb/ton coke handled	E	10,11

The emission factors for charging, coking, and pushing were developed from multiple test data and have a good reliability.

The source of the emission factor for coke handling is unclear, but it is assigned a very poor reliability rating.

2.2.1.3 Particle Characterization--

Fugitive particulate emissions from coking operations consist basically of coal and coke dust and polycyclic organic hydrocarbons (condensibles). Coal dust emissions from stockpiling, handling and transfer have a mean particulate diameter of 1-10 μm.[12]

In addition to emissions of coal and coke dust, coke ovens emit a variety of polycyclic organic compounds that are carcinogenic and mutagenic. The amount of organic compounds in the emissions is greatest during the charging operation and from oven leaks.[12]

Considerable analysis of particle sizes has been done for emissions from the pushing operation. The data show that for pushing emissions captured by a shed (large particles that settled under the shed were not included) the particle size distribution was 27-80 percent <10 μm and 15-26 percent <2 μm. One set of data on emissions captured by a hood (large particles included) shows 11 percent <10 μm and 4 percent <2 μm.[12].

2.2.1.4 Control Methods--

Coal unloading operations may be controlled by complete enclosure with or without venting to a fabric filter or by wet dust suppression by application of water with or without a

chemical wetting agent.

The coal storage pile emissions can be controlled by periodic application of a chemical wetting agent or plain water, or by enclosure of the pile. Loading in activities can be controlled by enclosure, application of water or a wetting agent, use of telescoping chutes, use of a special stacker or use of a stone ladder. Load-out activities can be controlled by use of an underpile conveyor, use of water and/or chemical sprays, or use of a stacker/reclaimer.

The coal transfer, conveying, pulverizing and screening operations can be controlled by use of enclosed conveyors, use of water and/or chemical sprays, or use of enclosures vented to fabric filters.

The control of unloading operations, storage pile activities, and transfer and conveying operations are discussed in greater detail in Section 2.1.

Basically two methods are available for control of charging emissions: charging on-the-main/staged charging and closed pipeline charging.

Charging consists of drawing the evolved gases into the battery main, and then into the recovery system by a steam ejector located at the top of the oven ascension pipe. Many factors influence the performance of this type of system, which ranges over a continuum from essentially uncontrolled to excellent control. Among these factors are the (1) strength of aspiration; (2) degree to which oven openings to the atmosphere are kept

closed throughout a charge; (3) use of aspiration at both ends of the oven; (4) maintenance of a free space at the top of the oven for the evolved gases to pass freely to the ascension pipes; (5) maintenance of a free passage through the ascension pipe; and (6) control of timing of steps in charging operations. The control efficiency for the best form of this system (staged charging) has been estimated as 99+ percent for any specific charge.[13]

Pipeline charging is a closed system. Coal is charged through pipes permanently connected to the ovens. Evolved gases and entrained coal fines are recovered in a charging main and recycled to the coal preheater plant. Some potential for emissions from oven leaks still exists, and emissions from the coal preheating plant (discharging through a stack) should be considered. Though operating problems have been experienced with the first installation now in operation, the potential control efficiency is judged to be 100 percent.[13]

Emissions from leaks during the coking cycle can be reduced by good maintenance, resealing, and sealing practices. For oven lids and luted doors, prompt sealing after they are returned to position, and resealing when necessary, is one of the best techniques. Oven door hoods over individual doors and a shed over the coke side of a battery (which is a technique to capture pushing emissions) also will effectively capture emissions from doors on that side of the battery. Gas cleaning efficiencies in excess of 85 percent for door emissions have been achieved with wet electrostatic precipitators.

A variety of systems are in use, under construction, planned, or in the development stage for capture of pushing emissions. Most of these systems fall into one of three roughly defined categories; (1) sheds over the coke side of a battery; (2) enclosures or hoods on the hot coke car; and (3) bench-mounted hoods over the hot coke car.

Sheds are literally a building over the entire coke side of a battery. Emissions from the pushing operation are contained in the shed and evacuated through a control device. The capture efficiency has been estimated in two cases as 91 percent and 85 percent.[14,15]

Enclosures on the hot coke car vary in design. All embody a close-fitting enclosure that minimizes any openings to the atmosphere. Size and location of these openings and the amount of draft applied to the enclosure affect capture efficiency. Although no measurements have been made, visual observations indicate capture performance comparable to a shed.[16,17] Enclosed quench cars differ by whether they remain stationary or are movable during pushing and whether draft is created by fans or other means.

The third category, hoods, exhibits great variety in design and performance. Generally, areas open to the atmosphere are greater than the enclosed cars, and typically the openings are at the interface between the hood and the car. Large gas volumes are required, although not as large as for a shed. Capture efficiency varies widely with design and increases when

larger hoods, greater gas volumes, and smaller open areas are used. Capture efficiency for the better designs (the closest fitting hoods with sufficient gas volume) may equal the capture performance of sheds or enclosed hot coke cars, especially if operating practices minimize "green" coke.[18,19]

The control devices used with the above capture systems are scrubbers or wet electrostatic precipitators. Both have demonstrated better than 98 percent control or reduction of emissions when installed on a shed. A venturi scrubber has achieved 99 percent removal efficiency on hood emissions and can be expected to perform equally as well on an enclosed car. The Aronetics wet scrubber has achieved better than 99 percent collection on fine ferroalloy fume and is presently used on at least one enclosed quench car.[20]

A factor that affects the performance of any pushing emission control system is the "greenness" of the coke pushed. "Green" coke is coke that has not been coked sufficiently due to problems with heat distribution, quality of the coal, or length of the coking time. It has high levels of volatile matter, and will result in a greater quantity of uncontrolled emissions during a push, hence a greater load for the control system. Any evaluation of control system performance should consider this fact.

One other significant factor is the emissions from the hot coke car as it travels to the quench station after a push. When a shed is used, these emissions are captured until the car exits the shed. For enclosed cars and hoods, capture varies with

design. Those designs where the car is covered and exhausted to control equipment will control emissions until the car reaches the quench station. Where no cover is used, the emissions are uncontrolled once the car moves away from the oven pushed and until it reaches the quench station.

Table 2.2.1-2 summarizes the available control technologies, their effectiveness, estimated costs, and RACM selections.

2.2.1.5 Recommended Reasonably Available Control Measures (RACM)--

The RACM selections for coke manufacturing fugitive emission sources are presented in Table 2.2.1-2.

The selected control technique for unloading of coal is a wet suppression system utilizing a chemical wetting agent for better dust control. The system gives better control than water alone, and is less costly than the more efficient application of a fabric filter.

Coal storage pile load-in activities can be controlled to a high degree by use of a telescopic chute to reduce the free fall distance to the pile, supplemented by a wet suppression system. Other activities at the storage piles can best be controlled by use of a wet suppression system which gives the highest degree of control at the lowest cost.

For the coal conveying, transfer, pulverizing, and screening activities, the selected RACM is the use of enclosures. This option is the least costly of the available control methods and is estimated to be 70 percent effective. With application of wet suppression at the coal pile load out, the emission potential in

TABLE 2.2.1-2. A SUMMARY OF THE CONTROL ALTERNATIVES, EFFICIENCIES AND COSTS, AND THE RACM SELECTIONS FOR FUGITIVE DUST EMISSIONS FROM SOURCES IN COKE MANUFACTURING

Fugitive dust sources	Control alternatives	Control efficiency, %	Control costs, Jan., 1980 $		Cost benefit, $/lb	RACM selection
			Capital	Annualized		
(1) Coal unloading (rail car)	Enclosure, vent to fabric filter	99[a]	120,000[a]	42,000[b]	0.07	Wet suppression (chemical)
	Wet suppression (chemical)	80[a]	37,000[a]	36,000[a]	0.07	
	Enclosure	70[c]	60,000[d]	12,000[e]	0.03	
(2) Coal storage Loading onto piles	Enclosure (stone ladder)	70-99[f]	25,000[g]	5,000[e]	0.05	Telescopic chutes, wet suppression
	Telescopic chutes	75[g]	9,000[g]	2,000[e]	0.02	
	Wet suppression (chemical)	80-90[h]	73,000[g]	30,000[i]	0.28	
	Wind guards	50[g]	37,000[g]	8,000[e]	0.13	
Loading out	Under pile conveyor	80[j]	6,300,000[k]	1,260,000[e]	9.84	Wet suppression (chemical)
	Wet suppression (chemical)	95[g]	73,000[g]	30,000[i]	0.19	
	Bucket wheel reclaimer	80[g]	4,500,000[g]	900,000[e]	7.03	
Wind erosion	Enclosures	100[g]	8,400,000[l]	1,680,000[e]	11.67	Wet suppression (chemical)
	Wet suppression	99[g]	14,000[g]	10,000[g]	0.07	
(3) Coal conveying, transfer, pulverizing, and screening	Wet suppression (chemical)	70-95[m]	200,000[m]	660,000[m]	0.94	Enclosure
	Enclosure	70[m]	69,000[m]	14,000[e]	0.03	
(4) Charging	Charging on-the-main/staged charging	85[o]	489,000[p]	390,000[n]	0.34	Charging on-the-main/staged charging
	Pipeline charging	100[q]	r	r	Not Available	

(continued)

TABLE 2.2.1-2. (continued)

Fugitive dust sources	Control alternatives	Control efficiency, %	Control costs, Jan., 1980 $ Capital	Control costs, Jan., 1980 $ Annualized	Cost benefit, $/lb	RACM selection
(5) Coking	Door and topside maintenance	85[s]	0[p]	739,000[t]	1.07	Maintenance
	Hoods, wet ESP	85+[u]	v	v	Not Available	
(6) Pushing	Shed, wet scrubber	88[w]	3,669,000[x]	1,173,000[x]	1.77	Enclosed hot coke car, wet scrubber
	Shed, wet ESP	88[w]	6,299,000[x]	1,555,000[x]	2.35	
	Enclosed hot coke car, wet scrubber	88[w]	2,617,000[x]	579,000[x]	0.88	
	Hood, mobile wet scrubber	88[w]	1,823,000[x]	735,000[x]	1.11	
	Hood, stationary wet scrubber	88[w]	2,924,000[x]	1,065,000[x]	1.61	
(7) Coke handling	Enclosure	70[m]	58,000[m]	12,000[e]	0.63	Enclosure
	Enclosure, vent to fabric filter	99[m]	174,000[m]	102,000[n]	3.79	
Haul roads	Wet suppression	50[y]	z	z		Oiling of unpaved roads. Cleaning of paved roads
	Watering	50[y]	z	z		
	Oiling	85[y]	z	z		
	Paving	85[y]	z	z		

TABLE 2.2.1-2 (continued)

[a] Reference 21.
[b] Reference 22. Based on 21,000 scfm, A/C of 6.5:1, 8000 h/yr operation.
[c] Reference 23.
[d] Reference 24. Based on 10 Ga steel enclosure of car dump.
[e] Includes capital charges and maintenance at 20% of capital.
[f] Reference 24.
[g] Reference 25.
[h] Reference 26.
[i] Reference 27. Based on 600 ton/h and 3000 h/yr operation.
[j] Reference 28.
[k] Reference 25. Based on avg. cost of $47.5/ton and 140,000 tons stored.
[l] Reference 25. Based on avg. cost of $60/ton and 140,000 tons stored.
[m] Reference 21.
[n] Reference 29. Assumed 1.6×10^6 tons/yr coal processed.
[o] Reference 30. Retrofit installation with modified larry car.
[p] Reference 31. Assumed 1 battery at 340,000 t/yr of coke.
[q] Assumed for a closed system.
[r] No costs available. Not feasible for retrofit installation.
[s] Reference 32.
[t] Reference 33.
[u] Reference 34.
[v] No cost or design data available.
[w] Reference 35.
[x] Reference 36. Based on 1 battery at 340,000 ton/yr of coke.
[y] Reference 37.
[z] See Section 2.1.

subsequent handling operations will be reduced and enclosure should be adequate control. The enclosure system chosen here would involve covering the top and sides of the handling and transfer activities.

The RACM selected for charging of coke ovens is the use of staged charging while charging "on-the-main." This is the only known effective control technique which can be applied in retrofit applications. This control method has been specified in the Consent Orders for several coke oven batteries in Ohio.

The RACM selected for control of fugitive emissions during the coking cycle is implementation of a door and topside maintenance program. Such a program would consist of prompt sealing of charging lids, immediate replacement of defective (non-sealing) lids, cleaning of sealing rings, door jambs, and doors after every push, careful handling of doors during removal and repositioning, conscientious tightening of door latches, repair and adjustment or replacement of leaking doors, and maintenance of a sufficient spare door inventory (8 to 10%). This program is most effective in reducing coking emissions and has been specified in the Consent Orders for several Ohio coke oven batteries.

The RACM selected for control of pushing emissions is the use of an enclosed hot car, vented to an attached control car with a wet scrubbing system. This technique is effective and the least costly of the available control measures. Also, it has been specified as a control method in the Consent Orders mentioned previously.

The recommended control technique for coke handling emissions is the enclosure of conveyors and transfer points. This option is effective and economical compared to use of fabric filters.

Haul roads may be a significant source of emissions at a coke plant. The suggested control techniques for haul roads are the regular sweeping and cleaning of paved roads, regular oiling of unpaved roads, and paving of heavily used unpaved roads. These are discussed in detail in Section 2.1.

REFERENCES FOR SECTION 2.2.1

1. Varga, J. Jr., Screening Study on By-Products Coke-Oven Plants. Draft report. Battelle Memorial Institute. Columbus, Ohio. Prepared for U.S. EPA, Research Triangle Park, North Carolina under Contract No. 68-02-0611. September 1974.

2. Barnes, T.M., Hoffman, A.O., and Lownie, H.W., Jr. Evaluation of Process Alternatives to Improve Control of Air Pollution from Production of Coke. Battelle Memorial Institute. Columbus, Ohio. Prepared for the Dept. of HEW, Contract No. PH 22-68-65. January 1970.

3. Varga, Jr. Jr., and H.W. Lownie, Jr. A Systems Analysis Study of the Integrated Iron and Steel Industry. Battelle Memorial Institute. Columbus, Ohio. Prepared for the Dept. of HEW under Contract No.22-68-65. May 1969.

4. Environmental Assessment of Coal Transportation. PEDCo-Environmental Specialists, Inc. Prepared for U.S. Environmental Protection Agency. Contract No. 68-02-1321 Task 40, October 15, 1976. pp. 4-38 and 4-51.

5. Open Dust Sources Around Iron and Steel Plants, Draft. Midwest Research Institute. Prepared for U.S. Environmental Protection Agency, Industrial Environmental Research Laboratory. Contract No.68-02-2120. Research Triangle Park, North Carolina. November 2, 1976.

6. A Study of Fugitive Emissions from Metallurgical Processes. Midwest Research Institute. Prepared for the U.S. Environmental Protection Agency, Industrial Environmental Research Laboratory. Contract No.68-02-2120. Monthly Progress Report No. 14. Research Triangle Park, North Carolina. September 10, 1976.

7. Preliminary Draft. Particulate Emission Factors Applicable to the Iron and Steel Industry. Midwest Research Institute. Prepared for the U.S. Environmental Protection Agency, Contract No. 68-02-2609. April 1979. p. 52.

8. Measurement of Coke Pushing Particulate Emissions at CF&I Steel Corporation Coke Plant. Prepared by York Research for CF&I Steel Corporation, Report No.7-9167 (October 4, 1976).

9. Jacko, Robert. Coke Oven Emission Measurement During Pushing. Paper presented at Symposium on Fugitive Emissions, Hartford, Connecticut. EPA 600/2-76-246. September 1976.

10. Transmittal from the American Iron and Steel Institute to Mr. Don Goodwin of the U.S. Environmental Protection Agency, Office of Air Quality Planning and Standards, Research Triangle Park, North Carolina. Data contained in table entitled Source Data for Steel Facility Factors. July 13, 1976.

11. Internal Memo, to George B. Crane from Reid Iversen, entitled Emission Factors for the Iron and Steel Industry. U.S. Environmental Protection Agency, Research Triangle Park, North Carolina. December 8, 1976.

12. The Particle Size Distribution of Coke Side Emissions from By-Product Coke Ovens. Division of Stationary Source Enforcement, U.S. Environmental Protection Agency, Washington, D.C., Draft.

13. Trenholm, A.R. Standards Support and Environmental Impact Statement: Standards of Performance for Coke Oven Batteries. U.S. Environmental Protection Agency, Emission Standards and Engineering Division. Research Triangle Park, North Carolina. May 1976. Draft.

14. Appendix III to letter from Edward Roe, Great Lakes Carbon Corp. to Don Goodwin, Environmental Protection Agency (April 14, 1975).

15. Study of Coke-Side Coke Oven Emissions. Draft report prepared by Clayton Environmental Consultants, Inc. for The Environmental Protection Agency, Contract No. 68-02-1408, Task No. 14, Volume 1. January 16, 1976.

16. Trenholm, A.R. Standards Support and Environmental Impact Statement: An Investigation of the Best Systems of Emission Reduction for the Pushing Operation on By-Product Coke Ovens. U.S. Environmental Protection Agency, Emission Standards and Engineering Division. Research Triangle Park, North Carolina. July 1976. Draft.

17. Barnes, T.M., H.W. Lownie, Jr. and J. Varga, Jr. Summary Report on Control of Coke Oven Emissions. Battelle Memorial Institute. Columbus, Ohio. Prepared for the American Iron and Steel Institute. December 31, 1973.

18. International trip report for coke plant in Germany. Andrew Trenholm, U.S. Environmental Protection Agency, Emission Standards and Engineering Division, Research Triangle Park, North Carolina. February 18, 1976.

19. Source Testing of a Stationary Coke Side Enclosure, Draft report prepared by Clayton Environmental Consultants, Inc., for the Environmental Protection Agency, Contract No. 68-02-1408, Task No. 10, Volume 1 (November 5, 1975).

20. Pengidore, D.A. Enclosed Coke Pushing and Quenching System Design Manual. National Steel Corp. Prepared for the U.S. Environmental Protection Agency, Office of Research and Development under Contract No. 68-02-0622. September 1973.

21. Bohn, Russel, T. Cuscino, Jr. and C. Cowherd, Jr. Fugitive Emissions from Integrated Iron and Steel Plants. Midwest Research Institute. EPA-600/2-78-050. Washington, D.C. March 1978. p. 6-3.

22. Industrial Gas Cleaning Institute, Inc. Nonmetallic Minerals Industries Control Equipment Costs. Prepared for U.S. Environmental Protection Agency, Research Triangle Park, North Carolina. Contract No. 68-02-1473, Task No. 19, February 1977. p. 3-5.

23. Op. cit. Reference 21. p. 6-2.

24. PEDCo Environmental, Inc. Technical Guidance for Control of Industrial Process Fugitive Particulate Emissions. EPA-450/3-77-010, March 1977. p. 2-38.

25. Op. cit. Reference 21. p. 6-6.

26. Op. cit. Reference 24.

27. Op. cit. Reference 22. p. 4-11.

28. Op. cit. Reference 24. p. 3-39.

29. PEDCo Environmental, Inc. Development of Air Pollution Control Cost Functions for the Integrated Iron and Steel Industry. Prepared for U.S. Environmental Protection Agency, Washington, D.C. Contract No. 68-01-4600. July 1979. p. 4-10.

30. Ibid. p. D-2.

31. Ibid. p. 4-6.

32. Ibid. p. D-3.

33. Ibid. pp. 4-10, 4-11.

34. Op. cit. Reference 24. p. 2-60.

35. Op. cit. Reference 24. p. 2-61.

36. Op. cit. Reference 16. p. 7-7.

37. Op. cit. Reference 24. p. 2-27.

APPENDIX FOR SECTION 2.2.1

Avg. coal usage per year at Ohio plants is 1.6×10^6 tpy.

(1) Coal unloading
Emissions = .04 (1.6×10^6 tpy) = 640,000

Enclosure, vent to fabric filter

$$\text{Capital cost} = \$100{,}000 \quad \frac{(249.6)}{(204.1)} = \$120{,}000 \text{ (MRI, p. 6-3)}$$

$$\text{Annual cost} = \$32{,}000 \quad \frac{(249.6)}{(192.1)} = \$42{,}000$$

@ 21,000 scfm (IGCI)

$$C/B = \frac{\$42{,}000/\text{yr}}{.99\ (640{,}000)} = \$0.07/\text{lb}$$

Wet suppression (chemical)

$$\text{Capital cost} = \$30{,}000 \quad \frac{(249.6)}{(204.1)} = \$37{,}000$$

$$\text{Annual cost} = \$0.02\ (1.6 \times 10^6) + 0.17\ (37{,}000) = \$36{,}000$$

$$C/B = \frac{\$36{,}000/\text{yr}}{.8\ (640{,}000)} = \$0.07/\text{lb}$$

Enclosure

Railcar dump 40' x 21' x 30' enclosure
Cost of enclosure plus doors=$2.38/lb GARD
Mass = 1.2 (5.625 lb/ft^2)[2(40' x 30') + (21' x 40') + 2(21' x 30')] = 25,000 lbs

Capital cost = $60,000
Annualized = 0.20 (60,000) = $12,000

$$C/B = \frac{\$12{,}000/\text{yr}}{.7\ (640{,}000)} = \$0.03/\text{lb}$$

(2) Coal storage

Loading onto piles
Emissions = 128,000 lbs/yr

Enclosure (stone ladder)

$$\text{Capital cost} = \$20{,}000 \quad \frac{(249.6)}{(204.1)} = \$25{,}000$$

$$\text{Annual cost} = .2\ (25{,}000) = \$5{,}000$$

$$C/B = \frac{\$5{,}000/yr}{.85\ (128{,}000)} = \$0.05/lb$$

Telescopic chutes

Capital cost = $9,000
Annual cost = 2,000

$$C/B = \frac{\$2{,}000/yr}{.75\ (128{,}000)} = \$0.02/lb$$

Wet suppression (chemical)

$$\text{Capital cost} = \$60{,}000 \quad \frac{(249.6)}{(204.1)} = \$73{,}000 \quad \text{MRI}$$

$$\text{Annual cost} = \$24{,}250 \quad \frac{(249.6)}{(204.1)} = \$30{,}000$$

@ 600 tph and 3,000 hpy, NMI

$$C/B = \frac{\$30{,}000/yr}{.85\ (128{,}000)} = \$0.28/lb$$

Wind guards

Capital cost = $37,000
Annual cost = $8,000

$$C/B = \frac{\$8{,}000/yr}{.5\ (128{,}000)} = \$0.13/lb$$

Loading out
Emissions = 160,000 lbs/yr

Underpile conveyor

Capital cost = $6,300,000
Annual cost = $1,260,000

$$C/B = \frac{\$1{,}260{,}000/yr}{.8\ (160{,}000)} = \$9.84/lb$$

Wet suppression (chemical)
See loading onto piles

$$C/B = \frac{\$30{,}000/yr}{.95\ (160{,}000)} = \$0.19/lb$$

Bucket wheel reclaimer

Capital cost = $4,500,000
Annual cost = $900,000

$$C/B = \frac{\$900,000/yr}{.8\ (160,000)} = \$7.03/lb$$

Wind erosion
Emissions = 144,000 lbs/yr

Enclosures

Capital cost = ($60/ton)(140,000) = $8,400,000 MRI
Annual cost = 0.2 (8,400,000) = $1,680,000

$$C/B = \frac{\$1,680,000/yr}{1.0\ (144,000)} = \$11.67/lb$$

Wet suppression (chemical)

$$\text{Capital cost} = \$11,000 \quad \frac{(249.6)}{(204.1)} = \$14,000 \quad \text{MRI}$$

$$\text{Annual cost} = \left(\frac{.004 + 0.1}{2}\right)(120,000\ ft^2)\frac{(249.6)}{(204.1)}$$

$$= \$10,000$$

$$C/B = \frac{\$10,000/yr}{.99\ (144,000)} = \$0.07/lb$$

(3) Coal conveying, transfer, pulverizing, and screening
Emissions = 800,000 lbs/yr

Wet suppression (chemical)

Capital cost = $200,000
Annual cost = $660,000

$$C/B = \frac{\$660,000/yr}{.88\ (800,000)} = \$0.94/lb$$

Enclosure

Assume 1000' of conveyor, 5 transfer stations, 1 pulverizer and 1 screening operation.
Capital cost = [5(3,000) + 2 (3,000) + 35 (1000)]

$$\times \frac{(249.6)}{(204.1)} = \$69,000 \quad \text{(MRI)}$$

Annual cost = $14,000 (2% maintenance)

$$C/B = \frac{\$14,000/yr}{.70\ (800,000)} = \$0.03/lb$$

(4) Charging

Assume Ohio avg. battery size = 340,000 tpy coke
Emissions = 1,360,000 lbs/yr

Charging on-the-main/staged charging

$$\text{Capital cost} = \$400{,}000 \left(\frac{249.6}{204.1}\right) = \$489{,}000 \quad \text{(Reference 31, p. 4-6)}$$

Annual cost = $390,000 p. 4-10

$$C/B = \frac{\$390{,}000/\text{yr}}{.85\ (1{,}360{,}000)} = \$0.34/\text{lb}$$

Pipeline charging

No data

(5) Coking

Emissions = 816,000 lbs/yr

Door and topside maintenance

Capital cost = $0
Annual cost = $739,000

$$C/B = \frac{\$739{,}000/\text{yr}}{.85\ (816{,}000)} = \$1.07/\text{lb}$$

Hoods, wet ESP

No data

(6) Pushing

Emissions = 752,000 lbs/yr (clean coke)

Shed, wet scrubber

From Reference 27, p. 7-7 (cost are for a 823,000 tpy system at 1975 $)

$$\text{Adjusted cost} = \text{cost (@ 823,000)} \left(\frac{340}{823}\right)^{0.6} \left(\frac{249.6}{182.4}\right)$$

Capital cost = $3,669,000
Annual cost = $1,173,000

$$C/B = \frac{\$1{,}173{,}000/\text{yr}}{.88\ (752{,}000)} = \$1.77/\text{lb}$$

Shed, wet ESP

Capital cost = $6,299,000
Annual cost = $1,555,000

$$C/B = \frac{\$1{,}555{,}000/\text{yr}}{.88\ (752{,}000)} = \$2.35/\text{lb}$$

Enclosed hot coke car, wet scrubber

Capital cost = $2,617,000
Annual cost = $579,000

$$C/B = \frac{\$579,000/yr}{.88\ (752,000)} = \$0.88/lb$$

Hood, mobile wet scrubber

Capital cost = $1,823,000
Annual cost = $735,000

$$C/B = \frac{\$735,000/yr}{.88\ (752,000)} = \$1.11/lb$$

Hood, stationary wet scrubber

Capital cost = $2,924,000
Annual cost = $1,065,000

$$C/B = \frac{\$1,065,000/yr}{.88\ (752,000)} = \$1.61/lb$$

7 Coke handling
Emissions = .08 (340,000 tpy) = 27,200 lbs/yr

Enclosure

Assume 1000' of conveyor and 4 transfer points

$$\text{Capital cost} = [35\ (1,000) + 3,000\ (4)]\ \frac{(249.6)}{(204.1)}$$
$$= \$58,000\ (\text{p. 6-3, MRI})$$

Annual cost = .2 (58,000) = $12,000

$$C/B = \frac{\$12,000/yr}{.7\ (27,200)} = \$0.63/lb$$

Enclosure, vent to fabric filter

$$\text{Capital cost} = [70\ (1,000) + 18,000\ (4)]\ \frac{(249.6)}{(204.1)}$$
$$= \$174,000$$

Annual cost = 73,000 + .17 (174,000)
= $102,000

$$C/B = \frac{\$102,000/yr}{.99\ (27,200)} = \$3.79$$

2.2.2 Iron Production

2.2.2.1 Process Description--

Pig iron is the result of smelting iron-bearing materials in the presence of fluxes and a carbonaceous agent, usually coke, in a blast furnace. About 90 percent of the pig iron produced in the United States is consumed in making steel; the remainder is used for iron and steel castings. Typically a blast furnace in Ohio would produce about 650,000 tons per year of iron. Figures 2.2.2-1 and 2.2.2-2 illustrate cross sections of a typical blast furnace and a blast furnace plant with auxiliary equipment, respectively.

Fine particles, whether in natural ores or in concentrates, are undesirable as part of the blast furnace feed. The most desirable size for blast furnace feed is between 0.25 and 1.0 inch. Of the numerous methods available for agglomeration, sintering is most often used in the steel mill.

In the sintering process, a mixture of iron ore fines, iron-bearing materials or concentrates, coke fines, and steel plant waste materials (such as blast furnace flue dust, mill scale, etc.) are mixed and then spread on a traveling grate. The bed of material on the grate is ignited on the top by burners fired with oil, natural gas or coke-oven gas. As the grate moves slowly toward the discharge end, air is pulled down through the bed to support combustion. As the coke in the bed burns, the heat generated agglomerates the small particles. At the discharge end of the machine, the sinter is crushed to proper size, then cooled and finally screened. In some cases, limestone fines are also added to the sinter feed to produce a self-fluxing sinter. This replaces part of the limestone normally charged into the blast furnace.

Figure 2.2.2-1. Blast furnace cross section.[37]

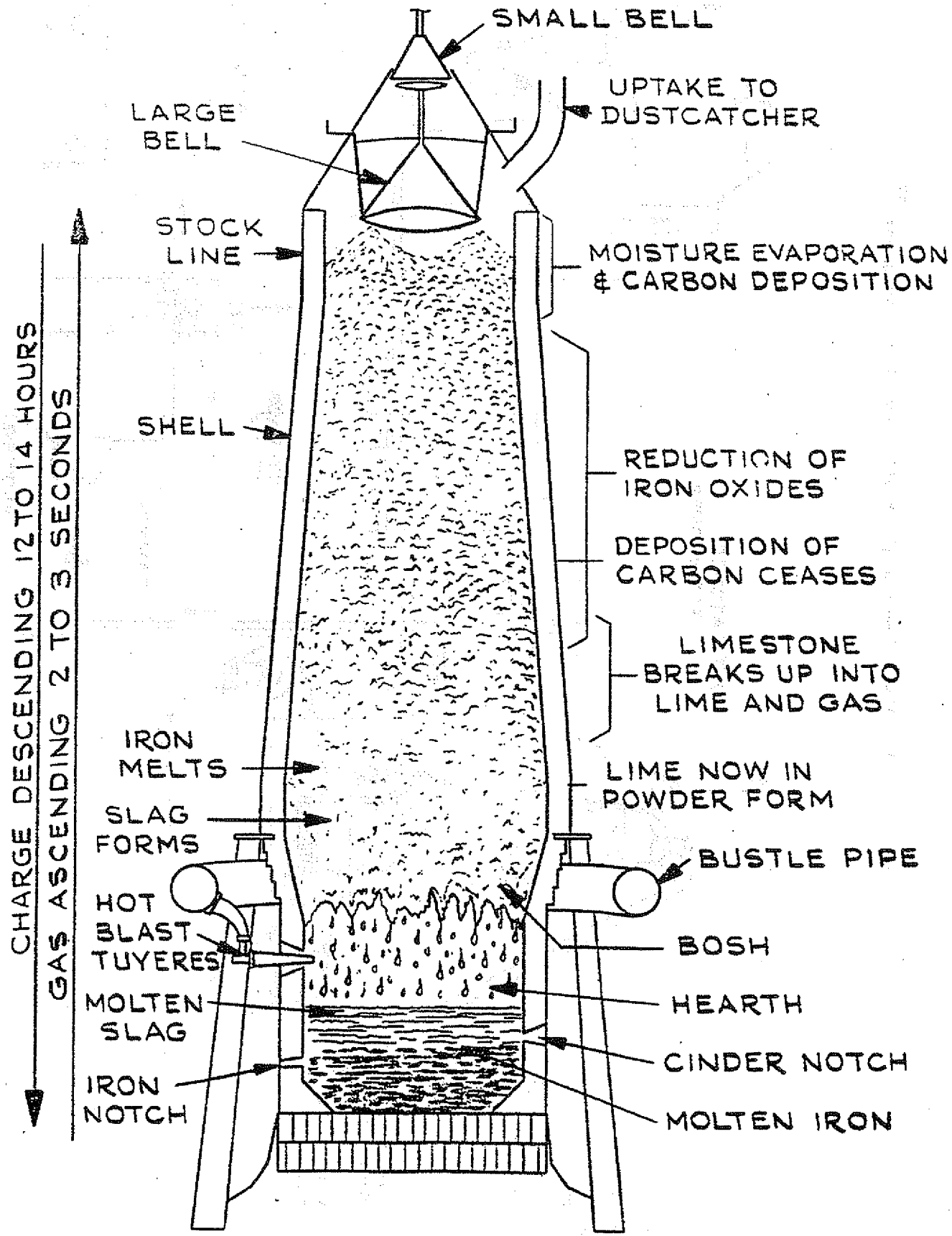

Figure 2.2.2-2. Blast furnace plant with auxiliary equipment.[37]

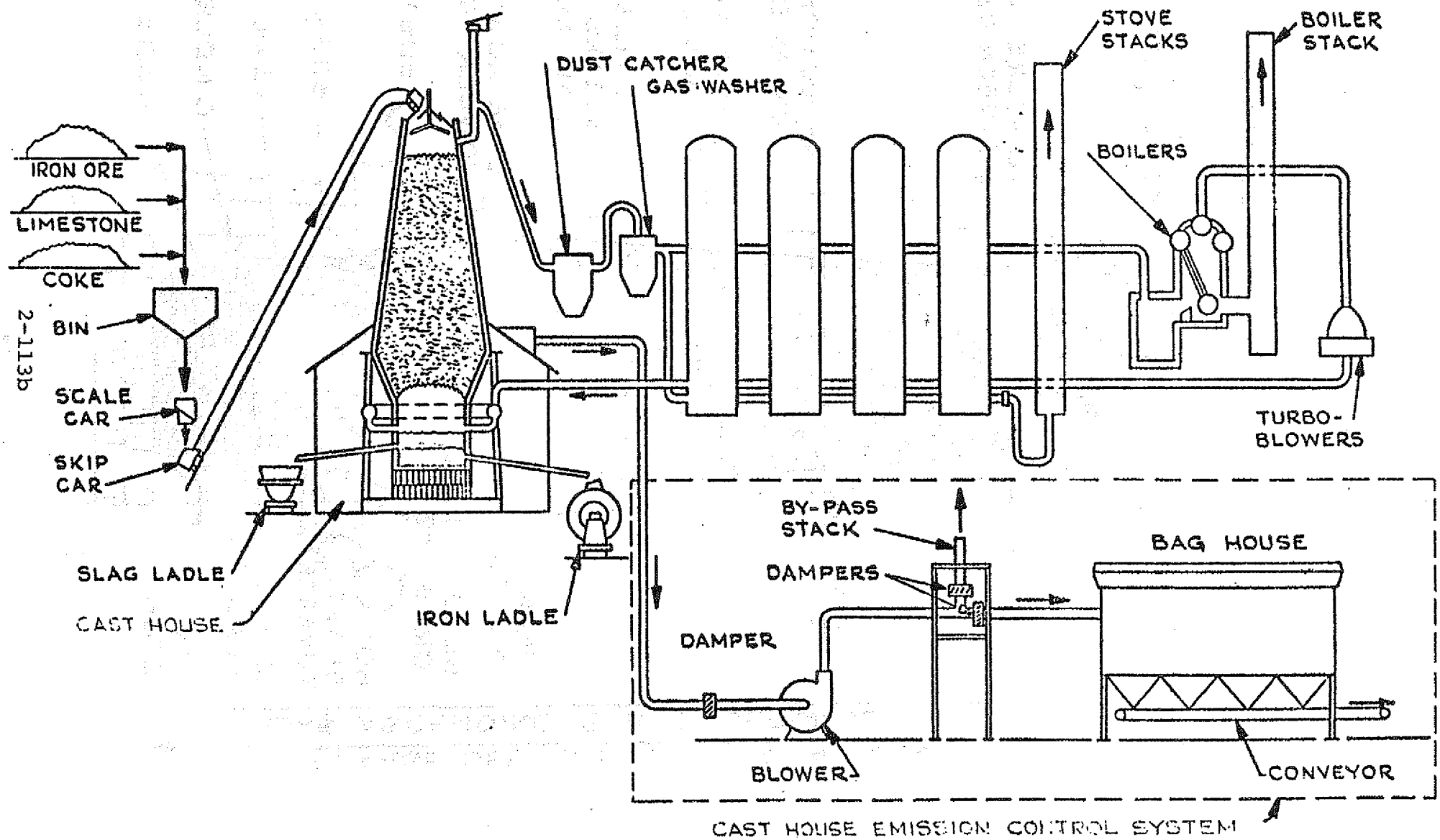

Very little sinter is stored in open piles. It is usually carried directly to bins at the blast furnace where it is weighed and transferred to the top of the furnace by a skip car hoist or by belt conveyor. Coke, raw iron ore and limestone are also stored in bins at the furnace and are charged in the same manner.

The blast furnace reduces the iron ore and iron-bearing materials to produce pig iron. Iron-bearing materials (iron ore, sinter, pellets, mill scale, slag, scrap iron), coke and fluxes (limestone, dolomite, etc.) are charged into the top of the furnace and referred to as burden. Heated air is blown into the furnace near its base or hearth line through tuyeres. In some instances fuel oil or powdered coke is also blown into the bottom. The burden descends down the furnace and the iron ore and iron-bearing materials are reduced and melted by the countercurrent flow of the hot reducing gases created by the combustion of coke. Occasionally, slips may occur as the burden descends. Slips occur when a portion of the burden wedges or bridges in the upper part of the furnace and a void is created as the material underneath continues to move downward. The void tends to increase in size until the "bridge" collapses, causing a sudden drop of the materials above and a sudden release of emissions.

Hot metal is tapped from the furnace through a hole or notch and poured into submarine or torpedo railroad cars for delivery to the steel-making furnaces. Slag from the blast furnace is either tapped from a higher notch than the hot metal or removed from the furnace through the iron notch during a cast. The slag

is guided into runners or troughs and discharged into either a slag pit adjacent to the blast furnace or into a slag thimble for transport to a slag dump or other disposal area. The slag going to the slag pit adjacent to the blast furnace can be water-sprayed or air-cooled and then removed by trucks. Slag granulators are also used for processing slag as it flows from the blast furnace. Processed slag finds use as a fill material or aggregate.

A process flow diagram for iron production is shown in Figure 2.2.2-3. Sources of fugitive emissions in iron production include the unloading, handling and transfer, and storage of iron ore and limestone; the handling and transfer, and storage of coke and blast furnace flue dust; sinter machine operations; sinter handling and transfer, and storage; blast furnace operations; and slag handling, crushing and storage. Each potential fugitive emission point is identified in the Figure. A common dust source found at iron-producing facilities, but not specifically included in the Figure, is plant haul roads. This general emission category is addressed in Section 2.1.

2.2.2.2 Fugitive Dust Emission Factors--

The estimated emission factors for iron production fugitive particulate sources as identified above are summarized in Table 2.2.2-1. Most of these emission factors are based upon very limited testing and/or engineering judgment and are of poor reliability. However, some of the major sources have been tested to the extent that the developed emission factors have fair to

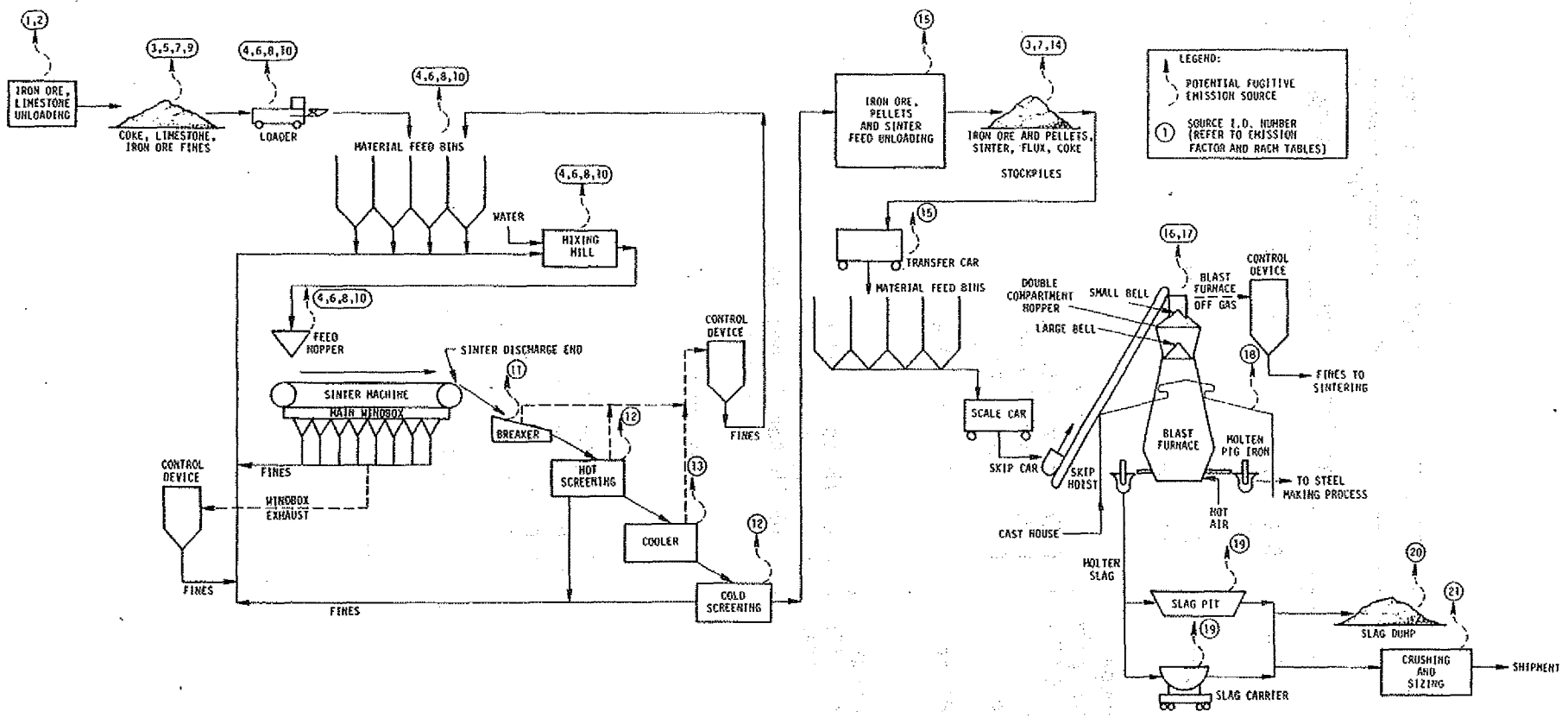

Figure 2.2.2-3. Simplified process flow diagram of iron production and associated fugitive particulate emission sources.

TABLE 2.2.2-1 FUGITIVE DUST EMISSION FACTORS FOR IRON PRODUCTION

Source	Emission factor	Reliability rating	Reference
(1) Iron ore unloading (ship or rail)	0.02 to 0.03 lb/ton ore unloaded	E	1
(2) Limestone unloading (ship or rail)	.03-0.4 lb/ton limestone unloaded	E	2
(3) Iron ore storage			
Loading onto pile	0.21 lb/ton loaded	D	3
Vehicular traffic	0.08 lb/ton stored	D	3
Loading out	0.30 lb/ton loaded out	D	3
Wind erosion	0.25 lb/ton stored	D	3
(4) Iron ore handling and transfer	2.0 lb/ton handled	D	4
(5) Limestone storage			
Loading onto pile	0.04 lb/ton loaded	D	5
Vehicular traffic	0.12 lb/ton stored	D	5
Loading out	0.05 lb/ton loaded out	D	5
Wind erosion	0.10 lb/ton stored	D	5
(6) Limestone handling and transfer	0.8 lb/ton handled	E	6
(7) Coke storage			
Loading onto pile	0.02 lb/ton loaded	D	3
Vehicular traffic	0.03 lb/ton stored	D	3
Loading out	0.03 lb/ton loaded out	D	3
Wind erosion	0.008 lb/ton stored	D	3
(8) Coke handling and transfer	0.11 lb/ton pig iron produced	E	7
(9) Blast furnace flue dust storage	Negligible	D	8
(10) Blast furnace flue dust handling and transfer	0.03 lb/ton flue dust	E	8

(continued)

Table 2.2.2-1 (continued)

Source	Emission factor	Reliability rating	Reference
(11) Sinter machine windbox discharge	Negligible	E	9
(12) Sinter machine discharge (breaker and screens)	6.8 lb/ton sinter	B	10
(13) Sinter cooler (not vented thru a stack)	0.32 to 0.8 lb/ton sinter	E	9,11
(14) Sinter storage			
Loading onto pile	0.25 lb/ton loaded	D	5
Vehicular traffic	0.10 lb/ton stored	D	5
Loading out	0.41 lb/ton loaded out	D	5
Wind erosion	0.30 lb/ton stored	D	5
(15) Sinter handling and transfer	0.4 lb/ton sinter	E	5
(16) Blast furnace charging	Negligible	E	5
(17) Blast furnace upsets (slips)	87.0 lb/slip	D	10
(18) Blast furnace tapping - iron and slag	0.3 lb/ton iron produced	B	10
(19) Slag handling	0.02 to 0.1 lb/ton slag	C	5
(20) Slag storage			
Loading onto pile	0.04 lb/ton loaded	B	3
Vehicular traffic	0.12 lb/ton stored	B	3
Loading out	0.05 lb/ton loaded out	B	3
Wind erosion	0.03 lb/ton stored	B	3
(21) Slag crushing	2.0 lb/ton crushed	A	5

good reliability.

The emission factors for storage activities (including iron ore, limestone, coke, sinter and slag) are based upon limited data for similar activities and engineering judgment. The reliability of these emission factors would be poor.

Emission factors for iron ore and limestone unloading were derived using engineering judgment from data on other materials. The reliability of these factors is believed to be poor.

The source of the emission factor for handling and transfer of iron ore is not clearly stated in the referenced source, but has been given a reliability rating of poor indicating that some limited data was available.

The emission factors for handling and transfer of limestone, coke, sinter, blast furnace flue dust and slag are based on engineering judgment and have a reliability rating of poor.

The negligible emission factor for blast furnace flue dust storage is based on the fact that most plants utilize a closed storage system. The reliability of this emission factor should be fair.

The emission factors for the sinter machine windbox discharge and cooler are based on observation and engineering judgment and have a reliability rating of poor. The emission factor for the sinter machine discharge and screens is based upon test data and should have good reliability.

The emission factors for blast furnace charging and upsets were based upon test data and engineering judgment and have fair

reliability. The factor for tapping emissions is based upon limited test data and appears to have good reliability.

The emission factor for slag crushing is based upon data for stone crushing and should, therefore, be considered of poor reliability.

2.2.2.3 Particle Characterization--

Fugitive particulate emissions from iron production consist basically of coke, limestone, iron ore dusts and iron oxides. Coke dust emissions from stockpiling, handling and transfer have a mean particulate diameter of 3-10 μm.[4] Limestone dust from stockpiling, handling and transfer has a mean particulate diameter of 3-6 μm, of which 45-70 percent is less than 5 μm.[4]

Fugitive emissions from sintering consist mostly of ore dusts and metal oxides with a mean particle diameter of 48-180 μm.[3,12,13] Only 1-10 percent are less than 5 μm.[3,12,13] Exit temperatures range from 100 to 300°F. At the discharge end of the sintering process and during cooling, fugitive iron oxides emitted have a mean particle diameter of 48-180 μm, of which 40 to 80 percent are less than 100 μm size, and 10 percent are less than 5 μm.[3,12,13]

Fifteen to ninety percent of the fugitive metal fumes, iron oxides and incandescent particulates expelled during blast furnace operations and tapping have a mean diameter less than 70 μm.[4,12] Exit temperatures range from 3000 to 4000°F.[4,12] Sixty percent of the emissions from hot metal transfer from the blast furnace to the steel furnaces have a particle diameter less than 100 μm, with 10 percent less than 5 μm in size.[13]

2.2.2.4 Control Methods--

Fugitive emissions from handling and transfer of raw materials can be controlled by wet suppression, enclosure of the operations and by improvements in operating parameters and procedures. For example, conveyor belt systems may be partially covered to prevent windblown fugitive emissions or totally enclosed to prevent all fugitive emissions. Attentive operating techniques that preclude overload of transport systems and reduce free fall distances from grab buckets and clam shells will also reduce fugitive emissions. A more detailed treatment of storage, handling and transfer sources is given in Section 2.1.

Fugitive emissions generated during sinter machine windbox discharge can be effectively controlled by several methods. Wet suppression by means of applying a fine water spray to materials as they are discharged from the windbox will reduce the generation of fugitive emissions. Minimal free-fall distance between the discharge point and the receiving system serves to decrease the amount of fugitive emissions generated. Confining the windbox discharge and receiving systems will keep fugitive emissions from dispersing. The use of a fixed hood constructed around the discharge or over the receiving system will effectively capture fugitive emissions which can then be vented to a baghouse. Normally these fugitive emissions are negligible.

Fugitive emissions from the sinter machine discharge and sinter screens may be controlled through confinement by enclosure.

These emissions result from incomplete collection of emissions by the primary control device. If the system has primary controls of sufficient capacity, increasing the exhaust rate may increase collection efficiency. However, this may require changes such as a new fan and motor. Depending on the specific situation, the redesign of an existing control system may be considered. Preventive maintenance including repair and/or replacement of faulty parts will help alleviate fugitive emission problems. A fixed hood constructed over screening operations will effectively remove the emissions from this source. Fugitive emissions from the sinter cooler can be controlled by confining the cooler and venting to a mechanical collector or a fabric filter. Wet suppression may be used for controlling fugitive emissions from sinter machine discharge, screening or cooling. However, since the sinter is very hot during these operations, the effectiveness may be minimal. Wet suppression is sometimes used on the sinter as it comes from the cooler. The application rate must be closely regulated since the increased moisture content in the sinter will necessitate higher heat requirements in the blast furnace.

Operating practices and control of raw material quality can help prevent slips in blast furnaces. Operators of blast furnaces will often vary the sequence of skip car loads (coke, ore, stone, etc.) in order to minimize slips. Since no two blast furnaces perform alike, the proper sequence must be determined for each furnace. Two techniques have been suggested for fugitive emission control of furnace slips. One suggestion envisions venting

the bleeder valve to ground level into a water hot well where particulates would settle out as the gases bubbled out. A second suggestion pertained to a box over the bleeder valve that is fitted with baffles to induce the settling of particles. It should be noted that these two methods may be considered feasible, but are not known to have been used.

Tapping of iron and slag can both be controlled by the use of fixed or movable hoods. The choice of a fixed or movable hood will depend on space limitations as well as related operations which may make one type more desirable. At times because of furnace design, a hood must be placed some distance above a tapping area. Under such conditions movable curtains will aid in confining and directing fugitive emissions into the hood. Close covers over iron and slag runners are another way of effecting fume capture. The control equipment serving the exhaust from these operations is usually a baghouse.

Wet suppression by means of a water spray, with or without chemical additives, is a potential means of controlling fugitive emissions during handling and dumping of slag. However, wet suppression is limited to those instances where the slag is relatively cool. Generation of fugitive emissions during slag dumping can be reduced if the free-fall distance is kept to a minimum. Confinement of the slag dumping area or installation of wind break walls will help in preventing the generation of wind-blown fugitive emissions. If the dumping area is a relatively small area, it may be possible to install a fixed hood and vent

fugitive emissions to a baghouse.

Wet suppression during slag crushing will normally effectively control fugitive emissions. Alternate controls include use of a fixed hood over the crusher or use of a closed building with evacuation to a fabric filter.

Table 2.2.2-2 summarizes the available control technologies, their effectiveness, estimated costs, and RACM selections.

2.2.2.5 Recommended Reasonably Available Control Measures (RACM)--

The RACM selections for iron production fugitive emission sources are presented in Table 2.2.2-2.

The selected control technique for iron ore unloading is wet suppression by means of sprays at the receiving point. This method is effective (80% control) and economical when compared to the other control options.

The selected control for limestone unloading is also a wet suppression system. This system would be integrated with the overall control strategy for unloading operations, transfer points and stockpile load-in, wind erosion and load-out activities. Application points would be at the receiving point, all transfer points, stock pile loading and unloading points, and over the stockpile. The system is effective (95% control) and the least costly of the available control options.

Control of load-in emissions from iron ore storage piles is effectively achieved by use of telescopic chutes or stone ladders supplemented by wet suppression. Emissions from wind erosion, load-out activities and transfer points may be controlled

TABLE 2.2.2-2. A SUMMARY OF THE CONTROL ALTERNATIVES, EFFICIENCIES AND COSTS, AND THE RACM SELECTIONS FOR FUGITIVE DUST EMISSIONS FROM SOURCES IN IRON PRODUCTION

Fugitive dust sources	Control alternatives	Control efficiency, %	Control costs $ (Jan. 1980) Capital	Control costs $ (Jan. 1980) Annualized	Cost benefit, $/lb	RACM selection
(1) Iron ore unloading (barge or rail)	Wet suppression (chemical)	80[a]	37,000[a]	32,000[a]	0.19	Wet suppression (chemical)
	Partially enclosed bucket	low[b]	b	b	Not available	
	Enclosure of receiving point	70[a]	60,000[c]	12,000[d]	0.08	
	Enclosure of receiving point, exhaust to fabric filter	99[a]	120,000[a]	42,000[e]	0.20	
(2) Limestone unloading (barge or rail)	Enclosure of receiving point	50[f]	15,000[g]	3,000[d]	2.08	Wet suppression (chemical)
	Enclosure of receiving point, exhaust to fabric filter	99[h]	87,000[g,i]	21,000[e]	7.37	
	Wet suppression (chemical)	95[j]	64,000[k]	15,000[l]	1.27	
(3) Iron ore storage Loading onto pile	Enclosure (stone ladders)	80[m]	25,000[m]	5,000[d]	0.04	Telescopic chutes and wet suppression
	Wind guards	50[m]	37,000[m]	7,000[d]	0.08	
	Wet suppression (chemical)	75[m]	73,000[m]	30,000[n]	0.22	
	Telescopic chutes	75[m]	9,000[m]	2,000[d]	0.01	
Loading out	Under pile conveyor	80[o]	13,680,000[p]	2,736,000[d]	13.26	Wet suppression (chemical)
	Bucket wheel reclaimer	80[m]	4,500,000[m]	900,000[d]	4.36	
	Wet suppression (chemical)	95[m]	73,000[m]	30,000[n]	0.12	
Wind erosion	Enclosures	100[m]	17,280,000[q]	3,456,000[d]	16.07	Wet suppression (chemical)
	Wet suppression (chemical)	99[m]	14,000[m]	10,000[m]	0.05	
(4) Iron ore handling and transfer	Enclosure	70[a]	65,000[a]	13,000[d]	0.01	Wet suppression (chemical)
	Enclosure, vent to fabric filter	99[a]	218,000[a]	67,000[e]	0.04	
	Wet suppression (chemical)	95[a]	110,000[a]	52,000[a]	0.03	
(5) Limestone storage Loading onto piles	Enclosure	70-99[c,o]	950,000[r]	162,000[d]	98.83	Wet suppression (chemical)
	Wet suppression (chemical)	80-90[c,d]	s	s	1.27	
	Adjustable chutes	75[c,o]	44,000[t]	8,000[d]	22.22	
Loading out	Wet suppression (chemical)	80-90[c,o]	x	x	1.27	Wet suppression (chemical)
	Gravity feed onto conveyor	80[c,o]	570,000[u]	14,000[d]	237.50	
Wind erosion	Enclosure	95-99[c,o]	v	v	98.83	Wet suppression (chemical)
	Wet suppression (chemical)	90[c,o]	6,000[w]	8,000[t]	7.41	
	Watering	50[c,o]	5,000[w]	2,600[t]	4.33	
(6) Limestone conveying and transfer	Wet suppression (chemical)	90[x]	x	x	1.27	Wet suppression (chemical)
	Enclosure, vent to fabric filter	95[y]	117,000[a]	32,000[e]	3.51	

(continued)

_E 2.2.2-2 (continued)

Fugitive dust sources	Control alternatives	Control efficiency, %	Control costs $ (Jan. 1980) Capital	Annualized	Cost benefit, $/lb	RACM selection
(7) Coke storage						
Loading onto pile	Enclosure (stone ladders)	80[m]	25,000[m]	5,000[d]	0.82	Telescopic chutes, wet suppression (chemical)
	Wind guards	50[m]	37,000[m]	7,000[d]	1.84	
	Wet suppression (chemical)	75[m]	73,000[m]	30,000[n]	5.26	
	Telescopic chutes	75[m]	9,000[m]	2,000[d]	0.35	
Loading out	Under pile conveyor	80[o]	13,680,000[p]	2,736,000[d]	300.00	Wet suppression (chemical)
	Bucket wheel reclaimer	80[m]	4,500,000[m]	900,000[d]	98.70	
	Wet suppression (chemical)	95[m]	73,000[m]	30,000[n]	2.77	
Wind erosion	Enclosure	100[m]	17,280,000[q]	3,436,000[d]	1,130.00	Wet suppression (chemical)
	Wet suppression (chemical)	99[m]	14,000[m]	10,000[m]	3.32	
(8) Coke handling and transfer	Enclosure	70[a]	65,000[a]	13,000[d]	0.23	Wet suppression (chemical)
	Enclosure, vent to fabric filter	99[a]	218,000[a]	67,000[e]	0.85	
	Wet suppression (chemical)	95[a]	110,000[a]	52,000[a]	0.69	
(9) Blast furnace flue dust storage	Negligible source					No control
(10) Blast furnace flue dust handling and transfer	Enclosure	70[a]	20,000[a]	4,000[d]	7.33	Wet suppression (chemical)
	Enclosure, vent to fabric filter	99[a]	70,000[a]	15,000[e]	19.42	
	Wet suppression (chemical)	95[a]	37,000[a]	9,000[a]	12.15	
(11) Sinter machine windbox discharge	Negligible source					No control
(12) Sinter machine discharge (breaker and screens)	Enclosure	50[f]	25,000[a]	5,000[d]	0.002	Enclosure/hooding, vent to fabric filter
	Enclosure or hooding, vent to fabric filter	99[a]	343,000[z]	122,000[a]a	0.02	
(13) Sinter cooler (not vented thru a stack)	Enclosure or hooding, vent to fabric filter	99[a]	bb	bb	0.02	Enclosure/hooding, vent to fabric filter
	Enclosure	50[f]	25,000[a]	5,000[d]	0.03	
(14) Sinter storage						
Loading onto piles	Enclosure	70-99[c,o]	950,000[r]	162,000[d]	0.45	Wet suppression (chemical)
	Wet suppression (chemical)	80-90[c,o]	64,000[cc]	15,700[dd]	0.04	
	Adjustable chutes	75[c,o]	44,000[t]	7,500[d]	0.06	
Loading out	Wet suppression (chemical)	80-90[c,d]	ee	ee	0.04	Wet suppression (chemical)
	Gravity feed onto conveyor	80[c,o]	2,993,000[ff]	599,000[d]	2.54	
Wind erosion	Enclosure	95-99[c,o]	v	v	0.45	Wet suppression (chemical)
	Wet suppression (chemical)	90[c,o]	6,000[w]	8,000[t]	0.04	
	Watering	50[c,o]	5,000[w]	2,600[t]	0.02	

(continued)

TABLE 2.2.2-2 (continued)

Fugitive dust sources	Control alternatives	Control efficiency, %	Control costs $ (Jan. 1980) Capital	Control costs $ (Jan. 1980) Annualized	Cost benefit, $/lb	RACM selection
(15) Sinter handling and transfer	Enclosure	70[a]	37,000[a]	7,000[d]	0.03	Wet suppression (chemical)
	Enclosure, vent to fabric filter	99[a]	117,000[a]	38,000[e]	0.13	
	Wet suppression (chemical)	95[a]	55,000[a]	34,000[a]	0.13	
(16) Blast furnace charging	Negligible source					No control
(17) Blast furnace upsets (slips)	Operation practices and control of raw materials	Unknown	None	None	0.00	Operating practices and control of raw materials
	Vent bleeder valve to water well	Unknown	gg	gg	gg	
	Baffled enclosure of bleeder valve	Unknown	gg	gg	gg	
(18) Blast furnace tapping (cast house emissions)	Hooding tap holes and troughs to skimmers, fabric filter	65[f]	4,611,000[hh]	1,355,000[ii]	9.65	Building evacuation, fabric filter or hooding tap holes and troughs to skimmer, fabric filter
	Hooding tap holes to runners, fabric filter	94[f]	7,313,000[hh]	2,550,000[ii]	12.56	
	Building evacuation, fabric filter	99[f]	5,779,000[jj]	1,627,000[kk]	7.61	
(19) Slag handling	Wet suppression	50[f]	55,000[a]	34,000[a]	0.58	No control
	Hooding, wet scrubber	95[f]	4,942,000[hh]	1,030,000[ii]	9.17	
(20) Slag storage						
Loading onto piles	Enclosure	70-99[c,o]	950,000[r]	162,000[d]	1.30	Wet suppression (chemical)
	Wet suppression (chemical)	80-90[c,o]	64,000[cc]	15,700[dd]	0.10	
Loading out	Wet suppression (chemical)	80-90[c,d]	ee	ee	0.10	Wet suppression (chemical)
Wind erosion	Enclosure	95-99[c,o]	v	v	1.30	Wet suppression (chemical)
	Wet suppression (chemical)	90[c,o]	6,000[w]	8,000[t]	0.15	
	Watering	50[c,o]	5,000[w]	2,600[t]	0.09	
(21) Slag crushing	Wet suppression	50[f]	31,000[hh]	12,000[ii]	0.01	Wet suppression (chemical)
	Hooding, fabric filter	90[f]	279,000[hh]	118,000[ii]	0.03	

(continued)

TABLE 2.2.2-2 (continued)

[a] Reference 14.
[b] Reference 15. No data available on costs.
[c] Reference 16. Based on 10 Ga steel enclosure.
[d] Includes only maintenance and capital charges at 20% of capital.
[e] Reference 17. Based on 3000 h/yr operation.
[f] Estimated.
[g] Reference 18.
[h] Reference 19.
[i] Reference 20.
[j] Reference 21.
[k] Reference 22. Based on control of unloading, stockpile load-in and load-out, and transfer operations.
[l] Reference 23. Based on 3000 h/yr operation.
[m] Reference 24.
[n] Reference 25. Based on 600 tons/h and 3000 h/yr operation.
[o] Reference 26.
[p] Reference 24. Based on $47.5/ton and 288,000 tons stored.
[q] Reference 24. Based on $60/ton and 288,000 tons stored.
[r] Reference 27. Based on 12,000 tons stored.
[s] Costs are included in the figure for limestone unloading.
[t] Reference 27.
[u] Reference 24. Based on 47.5/ton and 12,000 tons stored.
[v] Costs included in figures for enclosure of loading onto piles.
[w] Reference 28. Adjusted to 100,000 tons per year throughput.
[x] Reference 29.
[y] Reference 30.
[z] Reference 31. Based on 0.76×10^6 ton/yr of sinter produced.
[aa] Reference 32. Based on 0.76×10^6 ton/yr of sinter produced.
[bb] Costs included with control of sinter machine discharge and screens.
[cc] Reference 22. Based on 150 ton/h throughput and control of loading in and loading out activities.
[dd] Reference 33. Based on 3000 h/yr operation.
[ee] Costs included in loading onto piles figures.
[ff] Reference 24. Based on 47.5/ton and 63,000 ton stored.
[gg] No cost data available.
[hh] Reference 34. Based on 760,000 ton/yr hot metal capacity.
[ii] Reference 35. Based on 760,000 ton/yr hot metal capacity.
[jj] Reference 36.
[kk] Reference 36. Plus capital charges at 20 percent of total investment.

by wet suppression as a least expensive alternative, but one which still provides good control efficiency (95%). The coke storage and handling/transfer emissions can also be effectively controlled by the same techniques (i.e., stone ladders or telescopic chutes and wet suppression).

No control is recommended for blast furnace flue dust storage since this is an enclosed operation. Application of wet sprays at transfer points, however, is recommended.

No control of the sinter machine windbox discharge is selected since this is a negligible source.[9] Sinter screens and coolers are usually controlled as point sources. However significant emissions may occur if the processes are not hooded properly for good capture efficiency. The recommeded control technique is the proper hooding and venting of these operations to a fabric filter.

The control recommended for sinter storage pile activities is wet suppression since it is effective (80-90% control) and not as costly as most other options. Application would occur at the load-in point, the load-out point and over the entire stockpile.

Control of sinter handling and transfer can be accomplished by use of a wet suppression system with sprays at transfer points.

No control is recommended for blast furnace charging since this is a negligible source.[5] Blast furnace slips can best be controlled by careful operation of the furnace and by quality control of the raw materials. No other control option has been demonstrated on a blast furnace.

The RACM selection for fugitive emissions from blast furnace tapping (cast house emissions) is either hooding the tap holes and troughs to skimmers and venting to a fabric filter or evacuating the building to a fabric filter. Although the cost-benefit value for building evacuation to a fabric filter was less than that for hooding the tap holes and troughs to skimmers and venting to a fabric filter, it is expected that the cost-benefit will be much higher at some facilities due to the larger air volumes required for ventilation. Therefore, it is anticipated that many of the affected facilities will choose the option of hooding the tap holes and troughs to skimmers and venting to a fabric filter.

Control options for slag handling are either ineffective or very costly, and no control is recommended for this relatively minor source.

Wet suppression is the recommended control technique for slag storage and crushing operations. Application points would include the load-in and load-out points, the entire storage pile, and the inlet and outlet of the crusher. It is the least costly of the effective control options.

Roads are a major source of fugitive emissions at iron and steel mills. The recommended control techniques are the regular sweeping and cleaning of paved roads, paving of roads with frequent traffic, and the regular oiling or use of wet suppression (chemical) for less traveled, unpaved roads. Details on these control options and costs are presented in Section 2.1.

REFERENCES FOR SECTION 2.2.2

1. Cross, F.L. Jr. and Forehand, G.D. Air Pollution Emissions from Bulk Loading Facilities, Volume 6, Environmental Nomograph Series. Technomic Publishing Co., Inc., Westport, Connecticut, 1975 pp. 3-4.

2. PEDCo Environmental, Inc. Technical Guidance for Control of Industrial Process Fugitive Particulate Emissions. EPA-450/3-77-010, March 1977. p. 2-17.

3. Open Dust Sources Around Iron and Steel Plants, Draft. Midwest Research Institute. Prepared for U.S. Environmental Protection Agency, Industrial Environmental Research Laboratory. Contract No. 68-02-2120. Research Triangle Park, North Carolina. November 2, 1976.

4. Gutow, B.S. An Inventory of Iron Foundry Emissions. Modern Casting. January 1972.

5. Op. cit. Reference 2. pp 2-33 through 2-37.

6. Ibid. p. 2-301.

7. Compilation of Air Pollutant Emission Factors. Second Edition. U.S. Environmental Protection Agency, Office of Air and Water Management, Office of Air Quality Planning and Standards. Publication No. AP-42. Research Triangle Park, North Carolina. February 1976.

8. Op. cit. Reference 2. pp 2-73 through 2-75.

9. Iversen, R.E. Meeting with U.S. Environmental Protection Agency and AISI on Steel Facility Emission Factors. April 14 and 15, 1976. U.S. Environmental Protection Agency Memorandum. June 7, 1976.

10. Cuscino, Thomas, Jr. Particulate Emission Factors Applicable to the Iron and Steel Industry. Draft. Midwest Research Institute. Prepared for U. S. Environmental Protection Agency, Research Triangle Park, North Carolina. April 5, 1974.

11. Speight, G.E. Best Practicable Means in the Iron and Steel Industry. The Chemical Engineer. March 1973.

12. Vandegrift, A.E. and L.J. Shannon. Handbook of Emissions, Effluents, and Control Practices for Stationary Particulate Pollution Sources. Midwest Research Institute. Prepared for U.S. Environmental Protection Agency. Contract No. CPA 22-26-104. November 1, 1970.

13. Bohn, R., T. Cuscino, Jr. and C. Cowherd, Jr. Fugitive Emissions from Integrated Iron and Steel Plants. EPA-600/2-78-050. Research Triangle Park, North Carolina. March 1978. p. 3-13.

14. Ibid. pp. 6-3, 6-3.

15. Op. cit. Reference 2. p. 2-22.

16. Ibid. p. 2-38.

17. Industrial Gas Cleaning Institute, Inc. Nonmetallic Minerals Industries Control Equipment costs. Prepared for U.S. Environmental Protection Agency, Research Triangle Park, North Carolina. Contract No. 68-02-1473, Task No.19, February 1977. p. 3-5.

18. GARD, Inc. Capital and Operating Costs of Selected Air Pollution Control Systems. EPA-450/3-76-014, May 1976, pp. 4-24, 4-34 to 4-36, 4-89.

19. Op. cit. Reference 18. p. 3-1.

20. Ibid. p. 3-3.

21. Ibid. p. A-13.

22. Ibid. p. 4-9.

23. Ibid. p. 4-12.

24. Op. cit. Reference 14. p. 6-6.

25. Op. cit. Reference 17. p. 4-11.

26. Op. cit. Reference 2. p. 2-39.

27. Ibid. pp. 2-39, 2-40.

28. PEDCo Environmental, Inc. Source Evaluation in Region IV Non-Attainment Areas to Determine TSP Emission Reduction Capabilities. Prepared for U.S. Environmental Protection Agency, Research Triangle Park, North Carolina. Contract No. 68-02-2603, Task No. 2, June 1978. p. 2-87.

29. PEDCo Environmental, Inc. Control Techniques for the Crushed and Broken Stone Industry, EPA Contract Nos. 68-01-4147 and 68-02-2603, Cincinnati, Ohio. July, 1974. p. 3-15.

30. Op. cit. Reference 2. p. 2-245.

31. PEDCo Environmental, Inc. Development of Air Pollution Control Cost Functions for the Integrated Iron and Steel Industry. Prepared for U.S. Environmental Protection Agency, Washington, D.C. Contract No. 68-01-4600. July 1979. p. 4-2.

32. Ibid. p. 4-10.

33. Op. cit. Reference 17. p. 4-12.

34. Ibid. P. 4-11.

35. Op. cit. Reference 13. p. 5-28.

36. Application for Plan Approval to Construct an Air Cleaning Device for Blast Furnace Cast House, No.3, Monessen Plant. Wheeling-Pittsburgh Steel Corporation. Submitted to Commonwealth of Pennsylvania, Department of Environmental Resources. September 28, 1979. p. 7.

37. May, E.P. Blast Furnace Cast House Emission Control Technology Assessment. Betz Environmental Engineers, Inc. Prepared for U.S. Environmental Protection Agency, Office of Research and Development, Washington, D.C. Contract No. 68-02-2123. EPA-600/2-77-231. November 1977. pp. 9 and 11.

APPENDIX FOR SECTION 2.2.2

Average capacities of Ohio iron production facilities from Appendix B of Reference 31

Sinter capacity (avg.) = 0.76×10^6 tpy
Blast furnaces capacity (avg.) 1.74×10^6 tpy/plant or
0.65×10^6 tpy/furnace
Hearth diameter (avg.) = 25'3"
Working volume = 40,460 ft^3

Average storage pile amounts from MRI (p. 4-15)

		Annual Throughput (10^6 tons)
Coke	20,000 tons	0.38
Iron ore pellets	100,000 tons	0.24
Lump iron ore	188,000 tons	0.62
Ore bedding	15,000 tons	0.29
Slag	162,000 tons	1.97
Sinter	63,000 tons	0.72

(1) Iron ore unloading
Total unloaded = 860,000 tpy
Emissions = (0.25 lb/ton)(0.86×10^6 tpy) = 215,000 lbs/yr

Wet suppression

Capital cost = $37,000 (see Coke)
Annual operating cost @ $0.03/ton = $25,800
Annualized cost = $32,000

$$C/B = \frac{\$32{,}000/yr}{(0.8)(215{,}000\ lbs/yr)} = \$0.19/lb$$

Enclosure of receiving point

See Coke (1)

$$C/B = \frac{\$12{,}000/yr}{(0.7)(215{,}000\ lbs/yr)} = \$0.08/lb$$

Enclosure of receiving point, exhaust to fabric filter

See Coke (1)

$$C/B = \frac{\$42{,}000/yr}{(0.99)(215{,}000\ lbs/yr)} = \$0.20/lb$$

(2) Limestone unloading
Emissions = (0.24 lb/ton)(12,000 tpy) = 2,880 lbs/yr

Enclosure of receiving point

See Lime (1) Option C

$$C/B = \frac{\$3,000/yr}{(0.5)(2,880\ lbs/yr)} = \$2.08/lb$$

Enclosure of receiving point, exhaust to fabric filter

See Lime (1)

$$C/B = \frac{\$21,000/yr}{(0.99)(2,880\ lbs/yr)} = \$7.37/lb$$

Wet suppression

See Lime (1)

$$C/B = \frac{\$15,700/yr}{0.95\ (2,880) + 0.90(480) + 0.9(600) + 0.9(9,600)}$$

$$= \$1.27/lb$$

(3) Iron ore storage

Load-in: Emissions = $(0.21\ lb/ton)(0.86 \times 10^6\ tpy) = 180,600\ lbs/yr$

Enclosure (stone ladders) (Reference 25)

Capital cost = $\$20,000 \quad \frac{(249.6)}{(204.1)} = \$25,000$

Annual cost = 0.20 (25,000) = $5,000

$$C/B = \frac{\$5,000/yr}{(.8)(180,600\ lbs/yr)} = \$0.04/lb$$

Wind guards (Reference 25)

Capital cost = $\$30,000 \quad \frac{(249.6)}{(204.1)} = \$37,000$

Annual cost = 0.2 (37,000) = $7,000

$$C/B = \frac{\$7,000/yr}{(0.5)(180,600\ lbs/yr)} = \$0.08/lb$$

Wet suppression (Reference 25)

Capital cost = $\$60,000 \quad \frac{(249.6)}{(204.1)} = \$73,000$

Annual cost = $\$24,250 \quad \frac{(249.6)}{(204.1)} = \$30,000$

$$C/B = \frac{\$30,000/yr}{(0.75)(180,600\ lbs/yr)} = \$0.22/lb$$

Telescopic chutes (Reference 25)

Capital cost = $\$7,000 \quad \frac{(249.6)}{(204.1)} = \$9,000$

Annual cost = 0.2(9,000) = $2,000

$$C/B = \frac{\$2,000/yr}{(0.75)(180,600\ lbs/yr)} = \$0.01/lb$$

Load-out: Emissions = (0.3 lb/ton)(0.86 x 10^6 tpy) = 258,000 lbs/yr

Underpile conveyor (Reference 25)

Capital cost = ($47.5/ton)(288,000) = $13,680,000
Annual cost = (0.2)(13,680,000) = $2,736,000

$$C/B = \frac{\$2,736,000/yr}{(0.8)(258,000\ lbs/yr)} = \$13.26/lb$$

Bucket wheel reclaimer (Reference 25)

$$\text{Capital cost} = \frac{(2.2 \times 10^6) + (5.3 \times 10^6)}{2} \frac{(249.6)}{(204.1)} = \$4,500,000$$

Annual cost = .2(4,500,000) = $900,000

$$C/B = \frac{\$900,000/yr}{(.8)(258,000\ lbs/yr)} = \$4.36/lb$$

Wet suppression (Reference 25)

$$\text{Capital cost} = \$60,000 \quad \frac{(249.6)}{(204.1)} = \$73,000$$

$$\text{Annual cost} = \$24,250 \quad \frac{(249.6)}{(204.1)} = \$30,000 \text{ (Reference 26)}$$

$$C/B = \frac{\$30,000/yr}{(.95)(258,000\ lbs/yr)} = \$0.12/lb$$

Wind erosion: Emissions = 0.25 (0.86 x 10^6 tpy) = 215,000 lbs/yr

Enclosures (Reference 25)

Capital cost = ($60/ton)(288,000 tons stored)
= $17,280,000

Annual cost = .2(17,280,000) = $3,456,000

$$C/B = \frac{\$3,456,000/yr}{1.0\ (215,000\ lbs/yr)} = \$16.07/lb$$

Wet suppression

$$\text{Capital cost} = \$11,000 \quad \frac{(249.6)}{(204.1)} = \$14,000$$

Annual cost = $0.051/ft^2 (150,000 ft^2) + 0.17 (14,000)
= 10,000

$$C/B = \frac{\$10,000/yr}{.99\ (215,000\ lbs/yr)} = \$0.05/lb$$

(4) Iron ore handling and transfer
Emissions = $2(0.86 \times 10^6$ tpy) = 1,720,000 lbs/yr

Enclosures

$35/ft of conveyor + $3,000/transfer pt.
Assume 1000 ft of conveyor and 6 transfer stations

Capital cost = $53,000 $\frac{(249.6)}{(204.1)}$ = $65,000

Annual cost = .2 (65,000) = $13,000

$$C/B = \frac{\$13,000/yr}{.7\ (1,720,000\ lbs/yr)} = \$0.01/lb$$

Enclosure, vent to fabric filter

$70/ft of conveyor plus 18,000/transfer pt.

Capital cost = 178,000 $\frac{(249.6)}{(204.1)}$ = $218,000

Annual cost = $55,000 $\frac{(249.6)}{(204.1)}$ = $67,000

$$C/B = \frac{\$67,000/yr}{.99\ (1,720,000\ tpy)} = \$0.04/lb$$

Wet suppression

Capital cost = 6($15,000) $\frac{(249.6)}{(204.1)}$ = $110,000

Annual cost = 6(.03)(288,000 tons) = $52,000

$$C/B = \frac{\$52,000/yr}{.95\ (1,720,000\ tpy)} = \$0.03/lb$$

(5) Limestone storage

Loading in: Emissions = .04 (12,000) = 480 lbs/yr

Enclosure

See Lime (2)

$$C/B = \frac{\$162,000/yr}{.99\ (480) + .97\ (1200)} = \$98.83/lb$$

Wet suppression

See Lime (2)
C/B = $1.27/lb

Adjustable chutes

See Lime (2)

$$C/B = \frac{\$8,000/yr}{(.75)(480\ lbs/yr)} = \$22.22/lb$$

Loading out: Emissions = .05 (12,000) = 600 lbs/yr

Wet suppression

See Lime (2)
C/B = $1.27/lb

Gravity feed onto conveyor

See Lime (2)

$$C/B = \frac{\$114,000/yr}{0.8\ (600\ lbs/yr)} = \$237.5/lb$$

Wind erosion: Emissions = 0.10 (12,000) = 1,200 lbs/yr

Enclosure

See Lime (2)
C/B = $98.83/lb

Wet suppression

See Lime (2)

$$C/B = \frac{\$8,000/yr}{.09\ (1,200\ lbs/yr)} = \$7.41/lb$$

Watering

See Lime (2)

$$C/B = \frac{\$2,600/yr}{0.5\ (1,200\ lbs/yr)} = \$4.33/lb$$

(6) Limestone conveying and transfer
Emissions = 9,600 lbs/yr

Wet suppression

See Lime (1)
C/B = $1.27/lb

Enclosure, vent to fabric filter

Assume 650' conveyor and 4 transfer stations
Capital cost = 70 (650) + 18,000 (4) = $117,000
Annual cost = .2 (117,000) = $32,000

$$C/B = \frac{\$32,000/yr}{.95\ (9,600\ lbs/yr)} = \$3.51/lb$$

(7) Coke storage

Load-in: Emissions = .02 (0.38 x 10^6) = 7,600 lbs/yr

Enclosure (stone ladders)

See iron ore storage

$$C/B = \frac{\$5,000/yr}{0.8\ (7,600\ lbs/yr)} = \$0.82/lb$$

Wind guards

See iron ore storage

$$C/B = \frac{\$7,000/yr}{0.5\ (7,600\ lbs/yr)} = \$1.84/lb$$

Wet suppression

See iron ore storage

$$C/B = \frac{\$30,000/yr}{0.75\ (7,600\ lbs/yr)} = \$5.76/lb$$

Telescopic chutes

See iron ore storage

$$C/B = \frac{\$2,000/yr}{0.75\ (7,600\ lbs/yr)} = \$0.35/lb$$

Load-out: Emissions = $.03\ (0.38 \times 10^6) = \$11,400$

Under pile conveyor

See iron ore storage

$$C/B = \frac{\$2,736,000/yr}{0.8\ (11,400\ lbs/yr)} = \$300.00/lb$$

Bucket wheel reclaimer

See iron ore storage

$$C/B = \frac{\$900,000/yr}{0.8\ (11,400\ lbs/yr)} = \$98.70$$

Wet suppression

See iron ore storage

$$C/B = \frac{\$30,000/yr}{0.95\ (11,400\ lbs/yr)} = \$2.77/lb$$

Wind erosion: Emissions = $.008\ (0.38 \times 10^6) = 3,040$ lbs/yr

Enclosure

See iron ore storage

$$C/B = \frac{\$3,436,000/yr}{1.0\ (3,040\ lbs/yr)} = \$1,130/lb$$

Wet suppression

See iron ore storage

$$C/B = \frac{\$10,000/yr}{0.99\ (3,040\ lbs/yr)} = \$3.32/lb$$

8 Coke handling and transfer
Emissions = $0.11\ (0.72 \times 10^6) = 79,200$ lbs/yr

Enclosure

See iron ore

$$C/B = \frac{\$13,000/yr}{.7\ (79,200\ lbs/yr)} = \$0.23/lb$$

Enclosure, vent to fabric filter

See iron ore

$$C/B = \frac{\$67,000/yr}{.99\ (79,200\ lbs/yr)} = \$0.85/lb$$

Wet suppression

See iron ore

$$C/B = \frac{\$52,000/yr}{.95\ (79,200\ lbs/yr)} = \$0.69/lb$$

(9) Blast furnace flue dust storage
No control

(10) Blast furnace flue dust handling and transfer
Emissions = .03(26,000 tpy) = 780 lbs/yr

Enclosure

Assume 300' of conveyor and 3 transfer pts.

$$\text{Capital cost} = [35\ (300) + 2\ (3,000)]\ \frac{(249.6)}{(204.1)} = \$20,000$$

Annual cost = .2 (20,000) = $4,000

$$C/B = \frac{\$4,000/yr}{.7\ (780\ lbs/yr)} = \$7.33/lb$$

Enclosure, vent to fabric filter

$$\text{Capital cost} = [70\ (300) + 2\ (18,000)]\ \frac{(249.6)}{(204.1)} = \$70,000$$

$$\text{Annual cost} = \$12,300\ \frac{(249.6)}{(204.1)} = \$15,000$$

$$C/B = \frac{\$15,000/yr}{.99\ (780\ lbs/yr)} = \$19.42/lb$$

Wet suppression

$$\text{Capital cost} = 2\ (15,000)\frac{(249.6)}{(204.1)} = \$37,000$$

Annual cost = .03 (100,000 tons) + (37,000)(.17)
= $9,000

$$C/B = \frac{\$9,000}{.95\ (780\ lbs/yr)} = \$12.15/lb$$

(11) Sinter machine windbox discharge
No control

(12) Sinter machine discharge and screens
Emissions = 6.8 lb/ton (0.72×10^6 tpy) = 4.9×10^6 lbs/yr

Enclosure

Assume 70 ft of conveyor and one transfer point

Capital cost = $[18,000 + (70)(35)] \frac{(249.6)}{(204.1)}$
= $25,000

Annual cost = .2 (25,000) = $5,000

$$C/B = \frac{\$5,000/yr}{.5\ (4.9 \times 10^6\ lbs/yr)} = \$0.002/lb$$

Enclosure or hooding, vent to fabric filter

$$Capital = 17,460.9\ (.76 \times 10^6)^{0.199} \frac{(249.6)}{(204.1)} = \$343,000$$

$$Annual = 14,986\ (0.76 \times 10^6)^{0.199} \frac{(249.6)}{(204.1)} = \$122,000$$

$$C/B = \frac{\$122,000/yr}{.99\ (4.9 \times 10^6) + .99\ (403,200)} = \$0.02/lb$$

(13) Sinter cooler
Emissions = 0.56 lb/ton (0.72×10^6) = 403,200 lbs/yr

Enclosure or hooding, vent to fabric filter

Costs included with (12)
C/B = $0.02/lb

Enclosure

See (12)

$$C/B = \frac{\$5,000/yr}{.5\ (403,200\ lbs/yr)} = \$0.03/lb$$

(14) Sinter storage

Load-in: Emissions = 0.25 (0.72×10^6) = 180,000 lbs/yr

Enclosure

See Lime (2)

$$C/B = \frac{\$162,000/yr}{.85\ (180,000) + .97\ (216,000)} = \$0.45/lb$$

Wet suppression

$$Capital\ cost = \$52,500 \frac{(249.6)}{(204.1)} = \$64,000$$

$$Annual\ cost = \$12,800 \frac{(249.6)}{(204.1)} = \$15,700$$

$$C/B = \frac{\$15,700/yr}{.85\ (180,000) + .85\ (295,000)} = \$0.04/lb$$

Adjustable chutes

See Lime (2)

$$C/B = \frac{\$7,500/yr}{.75\ (180,000)} = \$0.06/lb$$

Load-out: Emissions = 0.41 (0.72 x 10^6) = 295,000 lbs/yr

Wet suppression

See load-in
C/B = $0.04/lb

Gravity feed onto conveyor

Capital cost = $47.50 (63,000) = $2,993,000
Annual cost = .2 (2,993,000) = $599,000

$$C/B = \frac{\$599,000/yr}{.8\ (295,000)} = \$2.54/lb$$

Wind erosion: Emissions = 0.3 (0.72 x 10^6) = 216,000 lbs/yr

Enclosure

See Lime (2)
C/B = $0.45/lb

Wet suppression

See Lime (2)

$$C/B = \frac{\$8,000/yr}{.9\ (216,000)} = \$0.04/lb$$

Watering

See Lime (2)

$$C/B = \frac{\$2,600}{.5\ (216,000)} = \$0.02/lb$$

(15) Sinter handling and transfer
Emissions = 0.4 (0.72 x 10^6) = 288,000 lbs/yr

Enclosure (Reference 15)

$$\text{Capital cost} = 35\ (600) + 3\ (3,000)\frac{(249.6)}{(204.1)} = \$37,000$$

Annual cost = (37,000)(.2) = $7,000

$$C/B = \frac{\$7,000}{.7\ (288,000)} = \$0.03/lb$$

Enclosure, vent to fabric filter

See Limestone

$$C/B = \frac{\$38,000/yr}{.99\ (288,000)} = \$0.13/lb$$

Wet suppression (Reference 15)

$$\text{Capital cost} = (15,000)(3)\ \frac{(249.6)}{(204.1)} = \$155,000$$

$$\text{Annual cost} = .03\ (.76 \times 10^6\ \text{tons})\frac{(249.6)}{(204.1)} + .17\ (55,000) = \$34,000$$

$$C/B = \frac{\$34,000/yr}{.94\ (288,000)} = \$0.13/lb$$

(16) Blast furnace charging
No control

(17) Blast furnace upsets (slips)
No cost data

(18) Blast furnace tapping (cast house emissions)
Emissions = $0.3\ (0.72 \times 10^6) = 216,000$ lbs/yr

Hooding tap holes and troughs to skimmer, fabric filter

(Reference 31)

$$\text{Capital cost} = 127,706\ (0.76 \times 10^6\ \text{tpy})^{0.250}\ \frac{(249.6)}{(204.1)} = \$4,611,000$$

$$\text{Annual cost} = 75,076.6\ (0.76 \times 10^6\ \text{tpy})^{0.135}\ \frac{(249.6)}{(204.1)} + 0.17\ (4,611,000) = \$1,355,000$$

$$C/B = \frac{\$1,355,000/yr}{.65\ (216,000)} = \$9.65/lb$$

Hooding tap holes to runners, fabric filter

$$\text{Capital cost} = 156,588.9\ (0.76 \times 10^6\ \text{tpy})^{0.269}\ \frac{(249.6)}{(204.1)} = \$7,313,000$$

$$\text{Annual cost} = 291,321.4\ (0.76 \times 10^6\ \text{tpy})^{0.096}\ \frac{(249.6)}{(204.1)} + 0.17\ (7,313,000) = \$2,550,000$$

$$C/B = \frac{\$2,550,000/yr}{.94\ (216,000)} = \$12.56/lb$$

Building evacuation, fabric filter

$$\text{Capital cost} = 1{,}646.4\ (0.76 \times 10^6\ \text{tpy})^{0.588}\ \frac{(249.6)}{(204.1)}$$
$$= \$5{,}779{,}000$$

$$\text{Annual cost} = 158.2\ (0.76 \times 10^6\ \text{tpy})^{0.599}\ \frac{(249.6)}{(204.1)}$$
$$+\ 0.17\ (5{,}779{,}000)$$
$$= \$1{,}627{,}000$$

$$C/B = \frac{\$1{,}627{,}000/\text{yr}}{.99\ (216{,}000)} = \$7.61/\text{lb}$$

(19) Slag handling

Emissions = $0.06\ (1.97 \times 10^6) = 118{,}200$ lbs/yr

Wet suppression

See (15)

$$C/B = \frac{\$34{,}000/\text{yr}}{.5\ (118{,}200)} = \$0.58/\text{lb}$$

Hooding, wet scrubber

$$\text{Capital cost} = 5{,}287.8\ (0.76 \times 10^6)^{0.446}\ \frac{(249.6)}{(204.1)}$$
$$= \$4{,}942{,}000$$

$$\text{Annual cost} = 12{,}259.9\ (0.76 \times 10^6)^{0.316}\ \frac{(249.6)}{(204.1)}$$
$$= \$1{,}030{,}000$$

$$C/B = \frac{\$1{,}030{,}000}{.95\ (118{,}200)} = \$9.17/\text{lb}$$

(20) Slag storage

Load-in: Emissions = $.04\ (1.97 \times 10^6) = 78{,}800$ lbs/yr

Enclosure

See (14)

$$C/B = \frac{\$162{,}000/\text{yr}}{.85\ (78{,}800) + .97\ (59{,}100)} = \$1.30/\text{lb}$$

Wet suppression

See (14)

$$C/B = \frac{\$15{,}700}{.85\ (78{,}800) + .85\ (98{,}500)} = \$0.10/\text{lb}$$

Load-out: Emissions = .05 (1.97×10^6) = 98,500 lbs/yr

Wet suppression

See 14
C/B = \$0.10/lb

Wind erosion: Emissions = .03 (1.97×10^6) = 59,100 lbs/yr

Enclosure

See 14
C/B = \$1.30/lb

Wet suppression

See 14

$$C/B = \frac{\$8,000/yr}{.9\ (59,100)} = \$0.15/lb$$

Watering

See 14

$$C/B = \frac{\$2,600/yr}{.5\ (59,100)} = \$0.09/lb$$

21 Slag crushing
Emissions = 2.0 (1.97×10^6) = 3,940,000 lbs/yr

Wet suppression (Reference 35)

$$\text{Capital cost} = 25,316.9 \quad \frac{(249.6)}{(204.1)} = \$31,000$$

$$\text{Annual cost} = 10,006.7 \quad \frac{(249.6)}{(204.1)} = \$12,000$$

$$C/B = \frac{\$12,000/yr}{.5\ (3,940,000)} = \$0.01/lb$$

Hooding, fabric filter (Reference 35)

$$\text{Capital cost} = 10,829.9\ (760,000)^{0.226}\ \frac{(249.6)}{(204.1)} = \$279,000$$

$$\text{Annual cost} = 26,494.3\ (760,000)^{0.057}\ \frac{(249.6)}{(204.1)} + .17\ (279,000) = \$118,000$$

$$C/B = \frac{\$118,000/yr}{.9\ (3,940,000)} = \$0.03/lb$$

2.2.3 Steel Manufacture

2.2.3.1 Process Description[1]--

Steel is usually made from scrap steel and/or molten iron (hot metal). Impurities present in the scrap and pig iron (such as sulfur and phosphorous) are reduced with fluxes. The content of carbon alloys such as manganese or silicon are adjusted as necessary. The three main types of steel-producing furnaces are electric arc, open hearth and basic oxygen.

Open hearth[1]--In the open hearth process for making steel, a mixture of scrap steel, fluxes and hot metal is melted in a shallow rectangular basin or hearth. The charging machine places the scrap materials and fluxes in the furnace. The molten metal is conveyed from the blast furnace by means of a refractory-lined trough from a ladle into the furnace. Burners are located at the end walls of the furnace and are alternately used between heats. Heat for the furnace is supplied by burning fuel oil, tar-pitch mixtures, coke-oven gas or natural gas. Impurities are removed in the slag layer on top of the molten metal. If oxygen is used, it is injected into the furnace through the roof to speed the refining process, save fuel, decrease tap-to-tap time and increase steel production rates. A complete cycle (one heat) usually takes about ten hours for conventional furnaces; but with the use of oxygen lancing or an oxygen-enriched fuel, the heat time may be reduced to six hours, depending on the amount of oxygen introduced. The steel is then

tapped into a ladle through a port at the rear of the furnace. Typically, in Ohio, an open hearth furnace would produce 189,000 tons of steel per year.[2] (A cross-section of an open hearth furnace is shown in Figure 2.2.3-1.)

Basic oxygen[1]—Hot metal is delivered to the basic oxygen shop in submarine or torpedo cars from the blast furnace. The metal is transferred to a charging ladle at the reladling station where the car and metal are weighed in order to charge the proper amount of hot metal. A crane transports the molten iron to the steel-making.

The basic oxygen process requires no external source of heat. A cylindrical-base, lined furnace with a dished bottom and truncated cone-shaped top is charged with scrap steel. A transfer ladle adds molten pig iron to the furnace, and an oxygen lance is lowered into the furnace. The flow of oxygen striking the surface of the liquid bath immediately starts exothermic reactions by oxidation of carbon, silicon, manganese and some of the iron. Fluxes and other additives can be added to the furnace during the operation through a hood opening.

At the completion of the blow (30-45 minutes), the lance is withdrawn, the temperature is read, and a sample of steel withdrawn for chemical analysis. When the temperature and composition are satisfactory, the furnace is tilted, the molten steel is transferred into the ladle atop the transfer car, and alloy composition is adjusted with additives. The average basic oxygen furnace in Ohio produces 1,450,000 tons of steel per year.[3] (A basic oxygen furnace is illustrated in Figure 2.2.3-2.)

Electric—In an electric arc furnace, the heat is supplied by electrical energy. With the power turned off, the electrodes

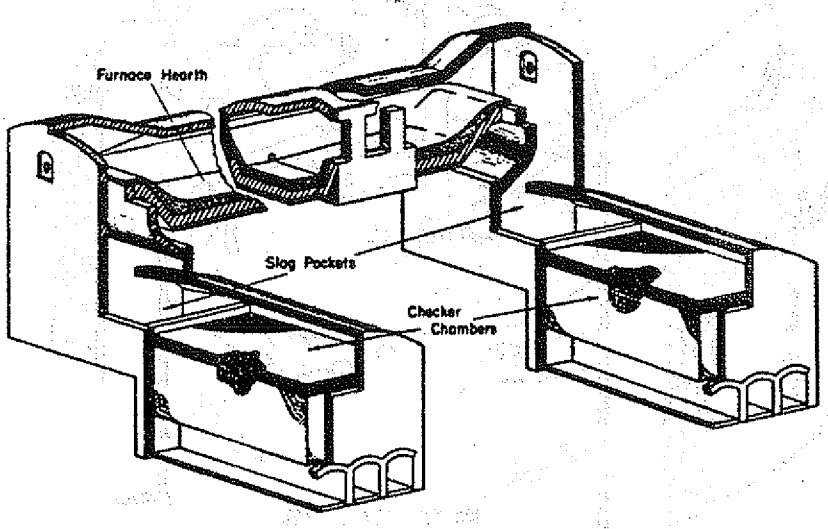

Figure 2.2.3-1. Cross-section of an open-hearth furnace.[33]

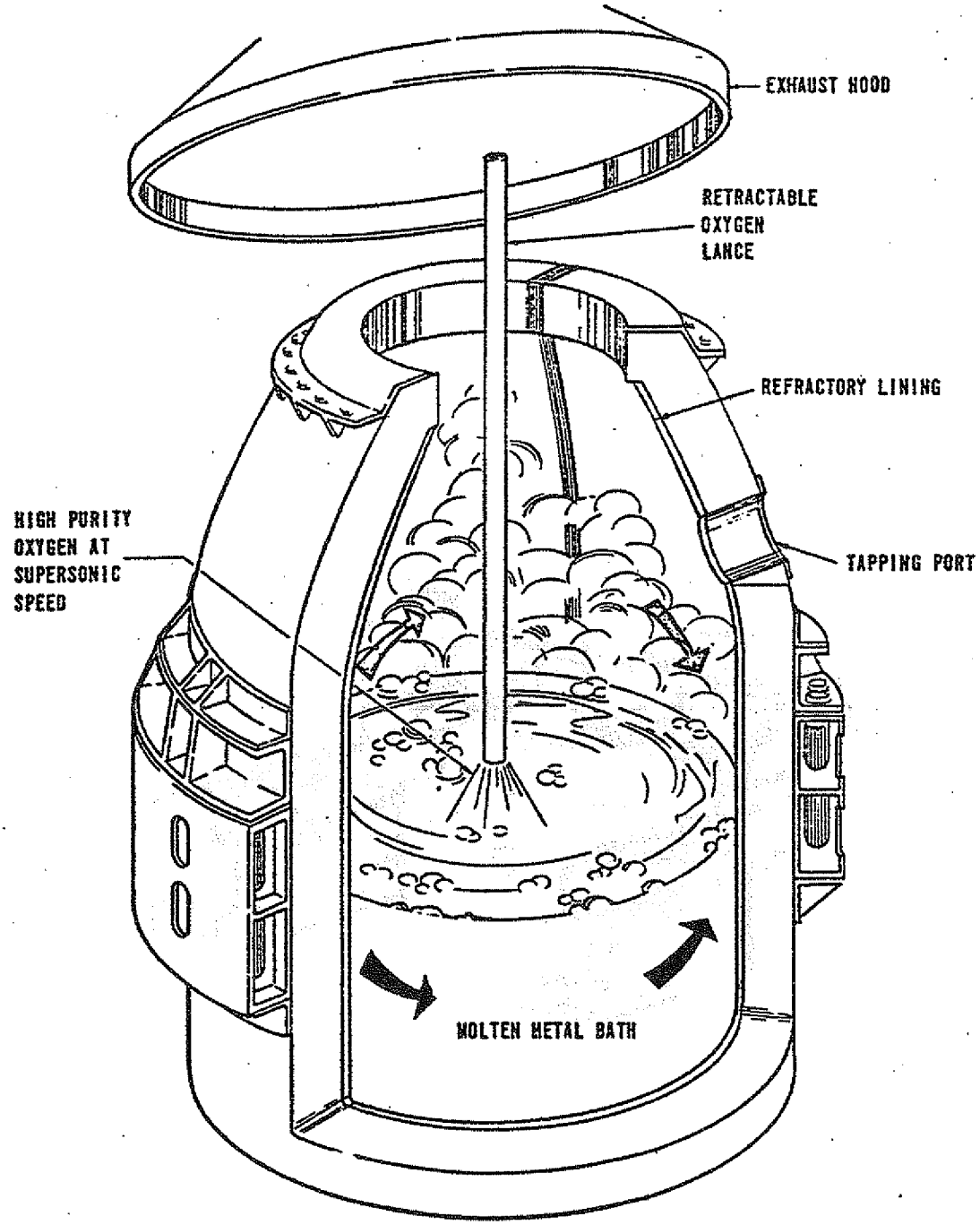

Figure 2.2.3-2. Cross-section of a basic oxygen furnace.[34]

and roof are swung out of the way. Solid scrap and other components of the charge (sometimes including hot metal) are placed in the furnace by means of an overhead crane. Alloying materials are added as and when required.

After charging is complete, the roof is returned and the electrodes are lowered. The power is turned on and the current passes from the electrodes through the charge. Since the arcs melt the portion of the charge directly beneath each electrode, the electrodes "bore" through the solid charge and the liquid metal forms a pool on the hearth. The charge is now heated by radiation from the pool, by heat from the arcs and by the heat generated in the scrap due to electrical resistance to current flow. Second and third charges may be added to the melt. During these charges considerable fugitive emissions are evolved.[4] Melting continues until the charge is completely melted. Composition of the steel is then adjusted by adding alloys, blowing oxygen into the bath and by using fluxes to remove impurities. The molten steel is then tapped into a ladle by tilting the furnace. Cycles or "heats" vary considerably depending on the type of steel produced. They range from 1.5 to 5 hours for carbon steel to 5 to 10 hours for alloy steels. An electric arc furnace in Ohio averages about 293,000 tons of steel output per year.[5] (An electric arc furnace is shown in Figure 2.2.3-3.)

The finished steel from whatever type of furnace, is tapped into ladles and transported by overhead crane to a pouring platform where the steel is either teemed (poured) into a series of

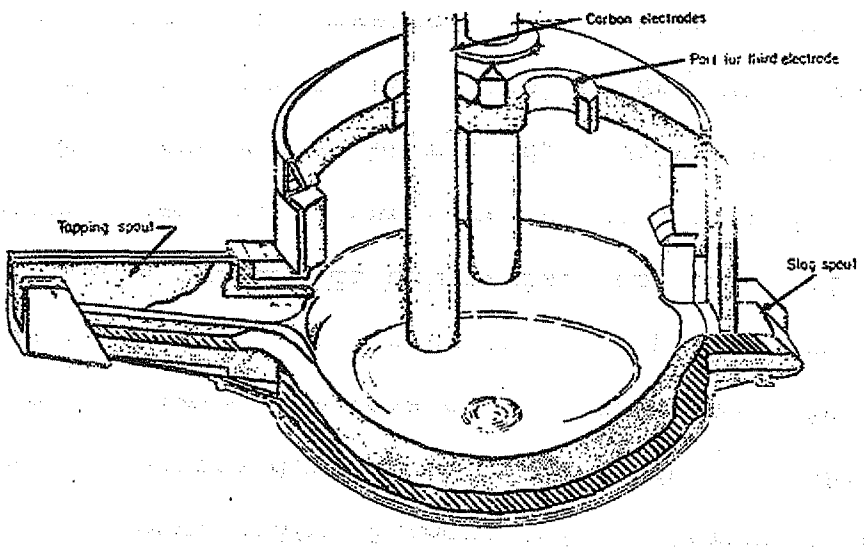

Figure 2.2.3-3. Cross-section of an electric arc furnace.[35]

molds or passes directly to a continuous casting unit. Before teeming or casting, the steel may be vacuum degassed to lower the free gas content of the steel. When teemed into molds, the molten steel solidifies to form an ingot. Continuous casting is a process whereby the molten steel is teemed into a tundish, and the flow from the tundish is controlled as the molten steel discharges into one or more molds of the continuous caster. The solidified steel is withdrawn from the bottom of the molds as a continuous strand and subsequently cut to desired lengths as the casting continues.

After the ingots are cool, they are stripped from the molds and transferred to a heating furnace (called a soaking pit) where the temperature of the ingot is raised and equalized to soften the steel for rolling on the primary rolling mills. The products of the primary mills, known as the semifinished products, are called blooms, slabs and billets.

Surface defects are removed in a process called scarfing, and may be done either by hand or mechanically. The mechanical hot scarfer is installed directly in the mill line and is composed of a number of scarfing torches (oxyacetylene). The machine is designed to remove a thin layer (one-eighth inch or less) of metal from all four sides of red-hot steel billets, blooms or slabs as they travel through the machine. Scarfing is also done manually in some mills, and usually the material to be scarfed is cold. Prior to rolling, the material must be reheated in a horizontal furnace.

Slabs may be further processed into plates or coils. The coils are usually processed in the sheet and tin mills. Oxides and scale are chemically removed from the surface of the metal by pickling. The conventional facility for pickling strip is a horizontal continuous line of equipment consisting of a tank or tanks divided into separate sections for pickling, washing, etc., with uncoiling and welding equipment on the entry end and rewind and shearing equipment on the exit end.

After pickling, the coils in the sheet and tin mills may receive one of many treatments. These include cold reduction, batch or continuous annealing, tempering, tin plating, galvanizing, tin-free coating, chroming, slitting, leveling, shearing, etc. Blooms and billets are processed into structural shapes, tubes, bars, rebars and wire.

A process flow diagram for steel production is shown in Figure 2.2.3-4. Sources of fugitive emissions include scrap steel handling operations, flux material handling operations, hot metal reladling, basic oxygen furnace operations, open hearth furnace operations, electric arc furnace operations, ingot casting, steel reladling and scarfing. Each potential process fugitive emission point is identified in the Figure. A dust source common to all steel-producing facilities, but not specifically included in the Figure is plant haul roads. Haul roads are addressed in Section 2.1.

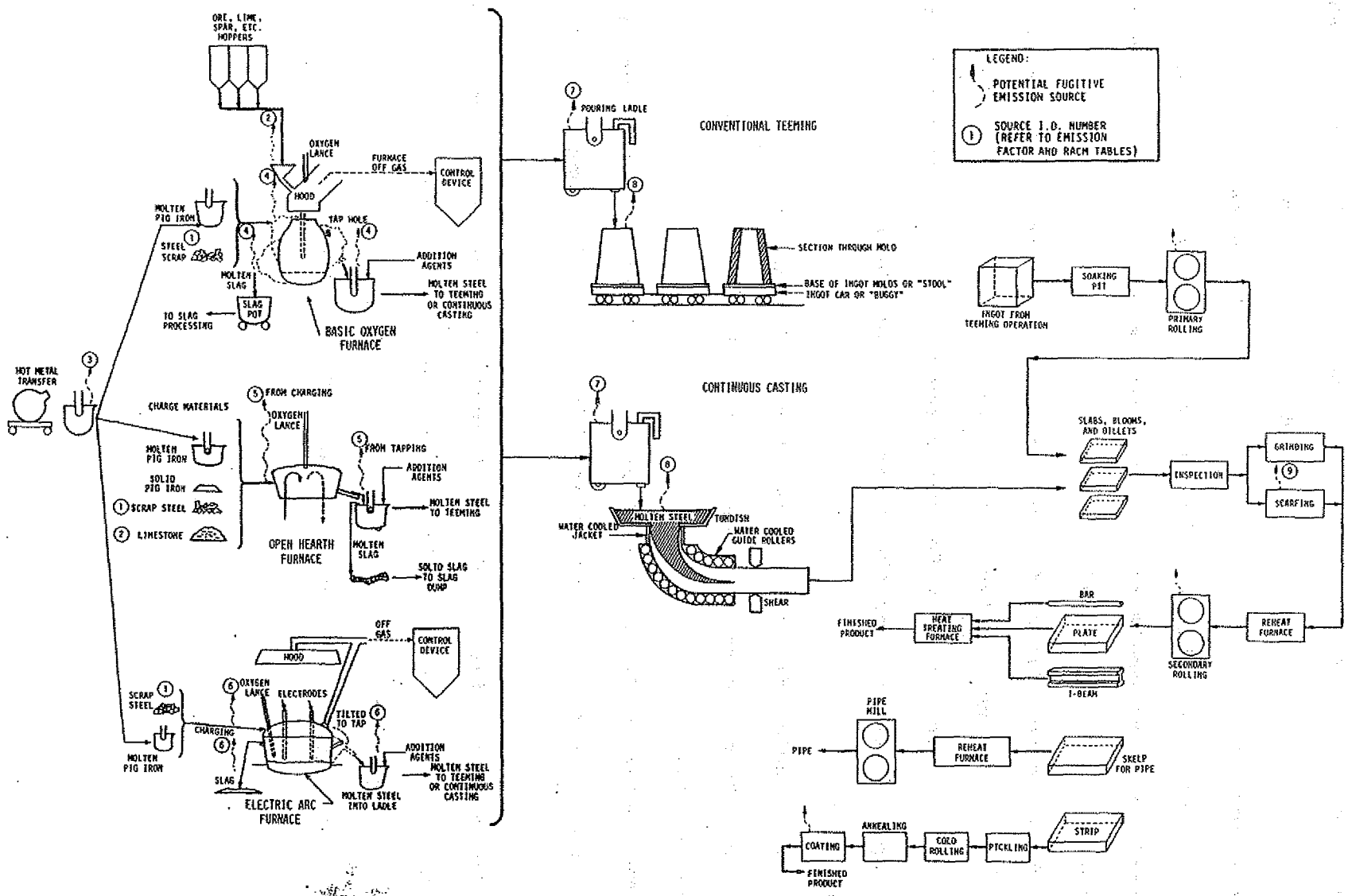

Figure 2.2.3-4. Simplified process flow diagram for steel manufacture and associated fugitive particulate emission sources.

2.2.3.2 Fugitive Dust Emission Factors--

The estimated emission factors for steel manufacturing fugitive emissions are summarized in Table 2.2.3-1. Most of these emission factors are based on test data and are considered of fair to very good reliability for site specific estimates.

The source of the emission factors for scrap steel and flux material handling operations is unclear, and these factors should be considered of poor reliability.

The emission factor for molten pig iron transfer to charging ladles is based upon 8 tests and is of very good reliability.

The emission factors for basic oxygen furnace operations are based upon 39 tests, and the reliability of these factors is good to very good.

The emission factor for open hearth furnace operations is based upon 28 measurements, and the reliability should be considered as fair.

The emission factor for electric arc furnace operations is based upon 2 tests, and the reliability should be considered as fair.

The emission factors for continuous casting and conventional teeming and molten steel reladling are based on 9 tests and should be considered of very good reliability.

No emission factor was available for hand scarfing.

TABLE 2.2.3-1. FUGITIVE DUST EMISSION FACTORS FOR STEEL MANUFACTURING

Source	Emission factor	Reliability rating	Reference
1 Scrap steel unloading transfer, and storage	Negligible	E	6
2 Ore and flux material unloading, transfer, and storage	Negligible	E	6
3 Molten pig iron transfer to charge ladles	0.19 lb/ton hot metal	A	7
4 Basic oxygen furnace - roof monitor (total)	0.5 lb/ton steel	B	7
Charging (at source)	0.6 lb/ton hot metal	A	7
Leakage	Negligible	E	4
Tapping - steel and slag (at source)	0.92 lb/ton steel tapped	A	7
5 Open hearth furnace - roof monitor (total, including charging and tapping)	0.168 lb/ton steel	C	8
6 Electric arc furnace - roof monitor (total, including charging, tapping, and slagging)	1.2 lb/ton steel	C	7
7 Molten steel reladling	0.81 lb/ton leaded steel	A	8
	0.07 lb/ton unleaded steel	A	8
8 Continuous casting/ conventional teeming	0.81 lb/ton leaded steel	A	8
	0.07 lb/ton unleaded steel	A	8
9 Scarfing (hand)	NA		

NA = Not available.

2.2.3.3 Particle Characterization--

Fugitive particulate emissions from steel production consist basically of iron oxide fume. According to the American Conference of Governmental Industrial Hygienists the level at which iron oxide fumes could produce human health effects is 5 mg/m^3.[9]

Emissions from a Basic Oxygen Furnace (BOF) may have exit temperatures of 560-3000°F, but this temperature quickly decreases. Fugitive emissions have a mean diameter of 0.5 μm, of which 85-99 percent are less than 5 μm.[10,11,12] Fugitive hot metal charging fumes from the BOF process are 35 percent iron oxide and 30 percent kish (graphite).[10,11,12] Fugitive tapping fumes are 75 percent iron oxide and are less than 10 μm.[10,11,12] Fugitive hot metal reladling fumes are 55 percent iron oxides less than 3 μm and 42 percent graphite greater than 75 μm.[10,11,12] Fugitive emissions from slagging are usually less than 100 μm.[10,11,12]

Fugitive particulate emission from the open hearth furnace process may have exit temperatures of 460-1800°F which also quickly cool before dispersing. Such fugitive emissions from an 80 foot height above the release point will have a vertical velocity of 175 fpm and a temperature of 52°F above ambient.[10,12] The fugitive particulate emissions have a mean diameter of 0.3-5.0 μm, of which 50-99 percent are less than 5 μm.[10,12]

Fugitive particulate emissions from an electric arc furnace process may have exit temperatures of 1000-3000°F but quickly cool before dispersing. Such fugitive emissions at a 90 to 137 foot height will have a vertical velocity of 200 to 500 fpm and a

temperature in the range of ambient to 80°F above ambient.[10,13] The fugitive particulate emissions have a mean diameter of 0.3-5 μm (1.3 μm average), of which 59-99 percent are less than 5 μm.[10,13]

Fugitive emissions from scarfing are usually less than 2 μm and have an exit temperature of about 42°F above ambient.[12,14]

2.2.3.4 Control Methods--

Fugitive emissions from hot metal or molten steel reladling can be effectively controlled by a close-fitting, retractable ladle hood and a control device. For example, in one instance reladling for a 320 ton capacity furnace is controlled by a 125,000 acfm ladle hood and high energy scrubber. In comparison, canopy or local hoods to control the same reladling station would require a 300,000 acfm flow.[15]

For the BOF shop, once the emissions escape and disperse within the building they become difficult to capture, and the only effective means necessitates building evacuation. While this may be a preferred alternative from an operational viewpoint, and because of near complete capture of emissions, the disadvantages are the high ventilation rate and larger control equipment size required together with higher costs. Flow rates for such a system would be in excess of 995,000 acfm.[14] An alternative to building evacuation is complete enclosure of the furnace and tapping areas to control charging, tapping, ladle alloy additions and slagging. Furnace enclosures with drafts of approximately 350,000 acfm are currently operating effectively.[4] (Figure 2.2.3-5 illustrates a BOF total evacuation system.)

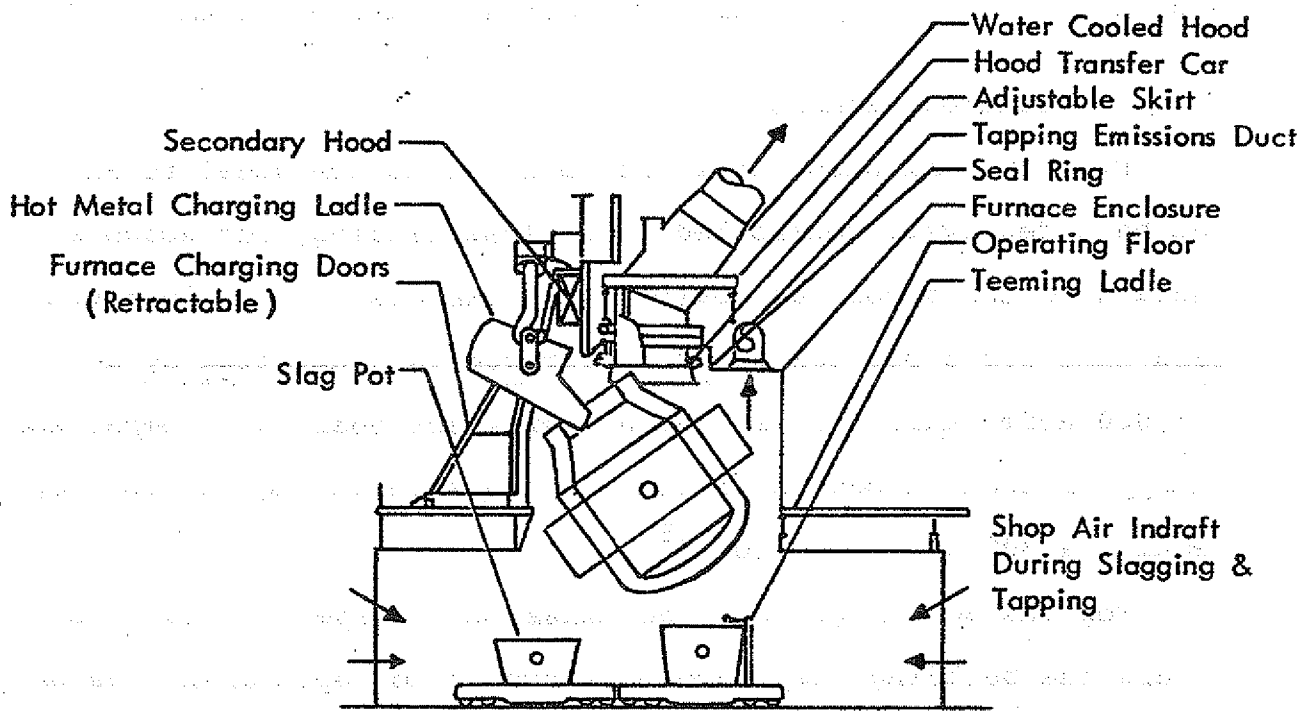

Figure 2.2.3-5. BOF total furnace enclosure system.[36]

Other control techniques for BOF shops include local or canopy hooding of the individual emission points. Secondary hoods can be used to control charging and tapping emissions. The collected emissions can be ducted to an existing or to a new collecting device. Many steel mills are redesigning and modifying existing systems rather than installing new facilities. Additional ductwork, larger air movers, and hooding changes are the main alterations to improve capture efficiency. "Puffing" emissions from the BOF during oxygen lancing will not occur if adequate draft is maintained. Similarly, the capture of charging emissions is enhanced by use of a "jaw" damper that increases draft at the charging aisle side of the main exhaust hood. (A BOF canopy hood system is shown in Figure 2.2.3-6.)

To control open hearth furnaces, complete or partial building evacuation is possible, but like the BOF shop, would require a very large airflow rate. Such a system would control all emission points to some degree. Canopy or local hooding of the charging doors and tapping area is an alternative and could be used to control furnace leaks as well. These hoods could be ducted to an existing control device or to separate systems.

Another control option for open hearth furnace fugitive emissions is operating precautions. Such precautions include computerization of checker reversals to optimize combustion, and the installation of pressure sensing devices for maintenance of a negative pressure environment in the furnace.

There are several control options for electric furnace melt shops. These include:

1. local hoods above the furnace,
2. roof or canopy hoods, and
3. building evacuation.

Each of these systems has advantages and disadvantages. Local and roof or canopy hoods can control charging and tapping

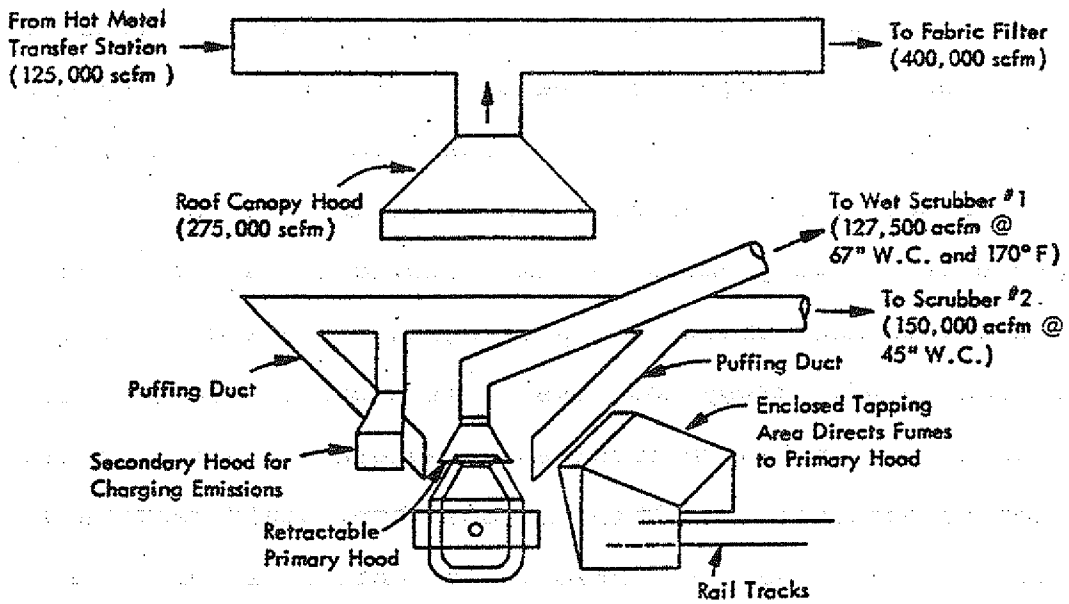

Figure 2.2.3-6. BOF canopy hood system.[37]

emissions but must be located so as to not interfere with normal operations.[16,17,18] Building evacuation can capture all fugitive emissions but at the expense of moving large volumes of air through larger size control equipment. Several electric furnace shops exhaust over 1 million ft^3/min. One installation handles 1.6 million ft^3/min at a capital cost of over $10 million.[18,19] Generally, flow rates for building evacuation range from about 3000 to 4000 scfm per ton of furnace capacity.[13] (Figure 2.2.3-7 depicts a building evacuation system on an electric furnace.)

A common control system is the use of both direct furnace evacuation and canopy hoods.[16,18,20] In designing the system, the canopy hood should be positioned as close above the source as possible without interfering with crane or other furnace tending operations. Thirty to forty feet between the furnace and the canopy is often necessary. Sheet metal partitions can be installed on three sides of the furnace to contain emissions and create a chimney effect. Flow rates are approximately 1,500 to 4,000 scfm per ton of furnace capacity. (Figure 2.2.3-8 shows an electric furnace canopy hood system.)

When a system such as direct shell evacuation is not used to capture emissions during melting and refining, canopy hoods alone may not be adequate and building evacuation may be necessary.

A promising capture technique is to enclose the furnace and evacuate the enclosure. This contains all emissions within the enclosure and accordingly requires less exhaust volume than for total building evacuation.

Building evacuation systems are estimated to achieve nearly 100 percent capture of the emissions from electric arc furnaces.

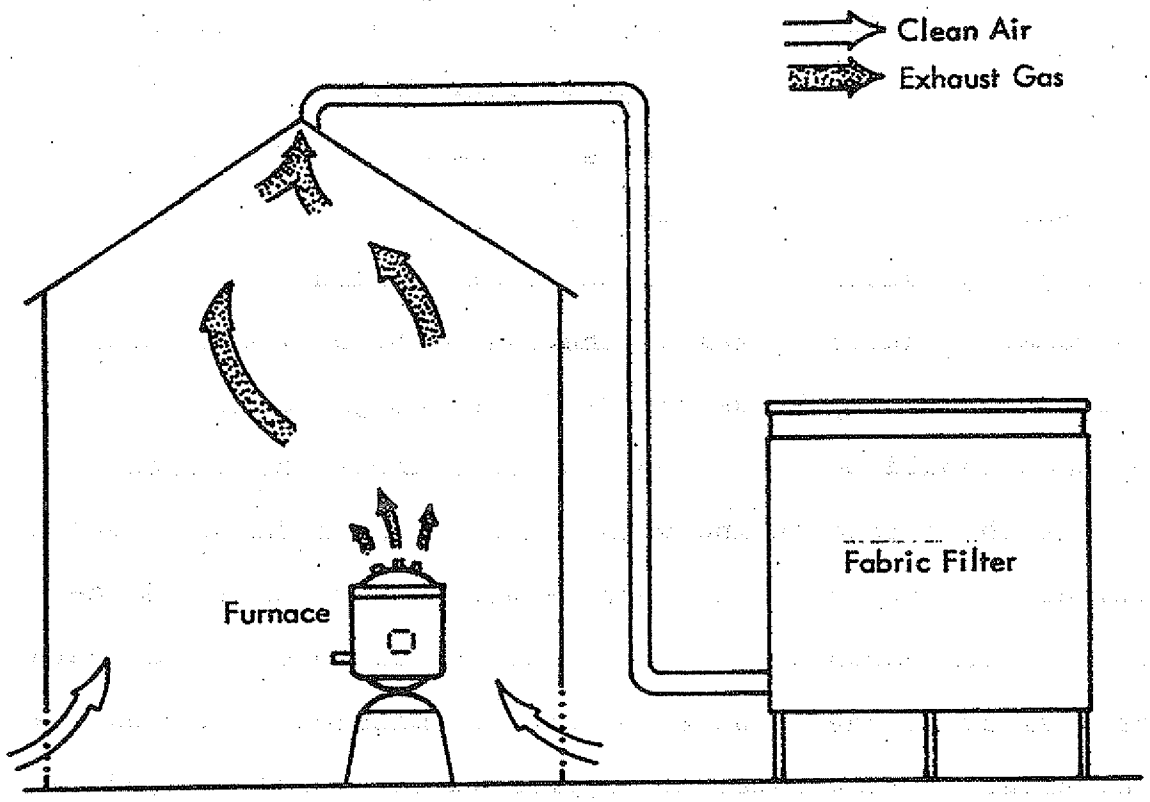

Figure 2.2.3-7. Electric furnace building evacuation system.[38]

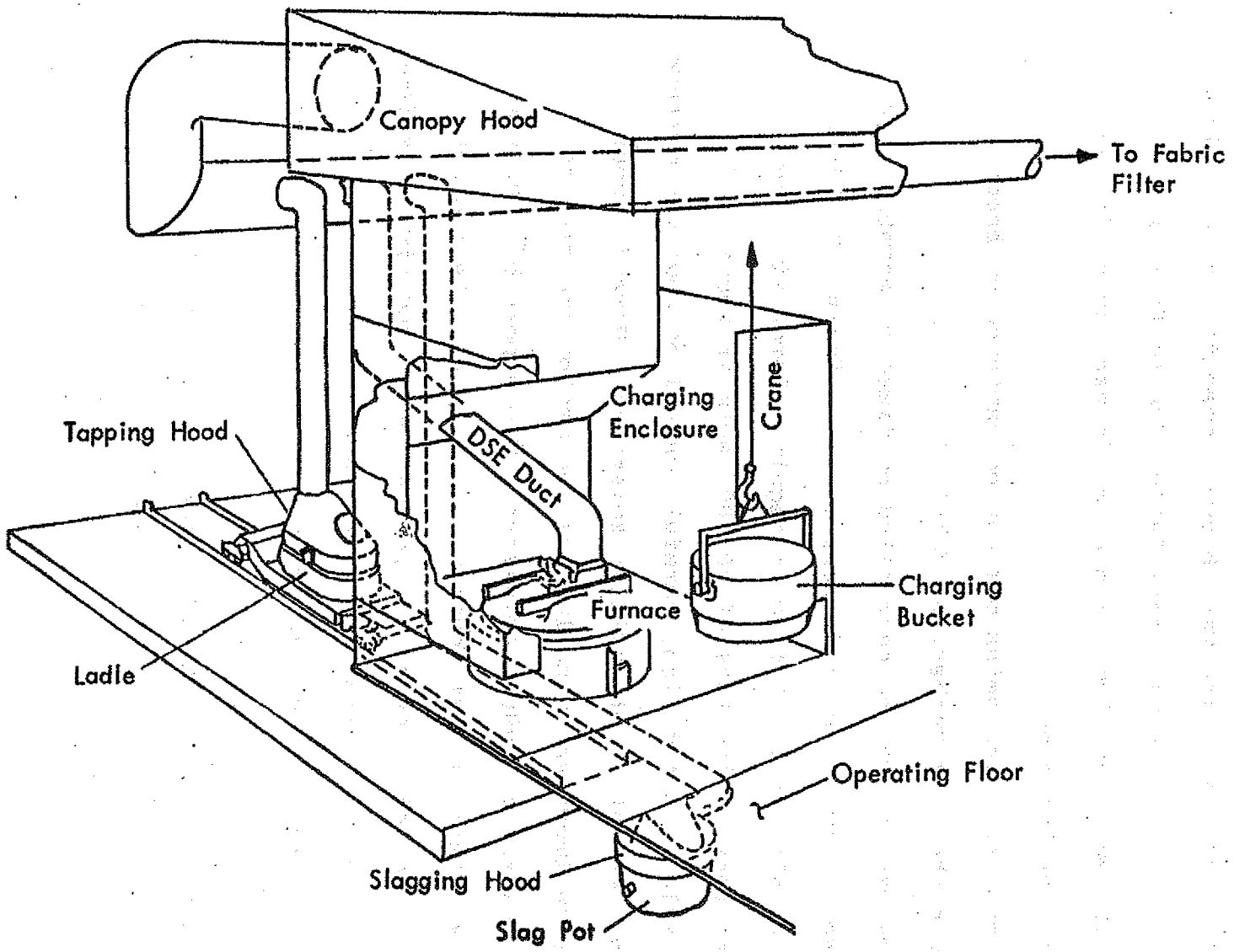

Figure 2.2.3-8. Electric furnace canopy hood system.[39]

A baghouse will collect 95 percent of the emissions. Canopy hoods have been estimated to capture 50 to 90 percent of the fugitive emissions from charging and tapping.[21] This estimate is based on judgment from visual observations; and, consequently, the range is wide. The efficiency will also vary between specific installations and from day to day for a given installation due to factors such as the volume of the emission plume, manner of furnace operation and cross drafts in the building.

Fugitive hand scarfing emissions can be captured by hooding and ducting to either a scrubber, or fabric filter.

Continuous casting can be controlled by fixed or movable hoods depending on space limitation and operating procedures. Building evacuation is an alternative but again requires large air flows. It is estimated that a flow rate of 500,000 acfm is required for each pouring aisle. In addition, careful control of pour temperature can help curtail evolution of fugitive emissions. However, pour temperature is an important metallurgical parameter and can not always be manipulated to reduce emissions. Where possible the use of mold release materials that contain little or no oils and other volatiles will also help prevent the generation of fugitive emissions. Conventional teeming operations are either uncontrolled or are inadvertently captured at steel manufacturing operations employing building evacuation control systems.

The available control techniques, their effectiveness, estimated costs, and RACM selections are summarized in Table 2.2.3-2.

TABLE 2.2.3-2. A SUMMARY OF THE CONTROL ALTERNATIVES, EFFICIENCIES AND COST, AND THE RACM SELECTIONS FOR FUGITIVE DUST EMISSIONS FROM SOURCES IN STEEL MANUFACTURING

Fugitive dust sources	Control alternatives	Control efficiency, %	Control costs, Jan. 1980, $		Cost benefit, $/lb	RACM selection
			Capital	Annualized		
(1) Scrap steel unloading, transfer and storage	Negligible source					No control
(2) Flux material unloading, transfer and storage	Negligible source					No control
(3) Molten pig iron transfer to charge ladles	Hooding, fabric filter	98[a]	968,000[b]	304,000[c]	2.72	Hooding, fabric filter
(4) Basic oxygen furnace, (charging, leaking, tapping, etc.)	Building evacuation, fabric filter	99[d]	9,432,000[e]	3,124,000[f]	4.35	Local hoods, vent to existing control device
	Furnace enclosure, fabric filter	92[g]	5,627,000[h]	1,452,000[i]	0.72	
	Local hoods, vent to existing furnace control device	60[g]	1,085,000[h]	290,000[i]	0.22	
(5) Open hearth furnace (charging, tapping, leaking, etc.)	Building evacuation, fabric filter	99[d]	9,432,000[e]	3,124,000[f]	98.61	Operating precautions
	Furnace enclosure, fabric filter	92[j]	5,627,000[j]	1,452,000[j]	49.32	
	Local hooding, vent to existing furnace control device	60[j]	1,085,000[j]	290,000[j]	15.10	
(6) Electric arc furnace (charging, leaking, tapping, etc.)	Building evacuation, fabric filter	99[g]	9,421,000[k]	3,264,000[l]	9.37	Furnace evacuation, fabric filter
	Canopy hoods, fabric filter	97[g]	5,763,000[k]	1,957,000[l]	5.73	
	Furnace evacuation, fabric filter	90[g]	2,228,000[k]	846,000[l]	2.67	
(7) Molten steel reladling	Hooding, fabric filter	98[a]	968,000[b]	304,000[c]	0.64 (leaded steel) 7.39 (unleaded steel)	Hooding, fabric filter (leaded steel) No control (unleaded steel)
(8) Continuous casting	Hooding, fabric filter	92[m]	2,476,000[n]	750,000[o]	1.68 (leaded steel) 19.40 (unleaded steel)	Hooding, fabric filter (leaded steel) No control (unleaded steel)
Conventional teeming	None	NA	NA	NA	NA	No control
(9) Scarfing (hand)	Hooding, control device	NA	NA	NA	NA	Hooding, control device[p]

(continued)

TABLE 2.2.3-2. (continued)

[a] Reference 22.
[b] Reference 23. Based on 189,000 tons of steel/yr.
[c] Reference 24. Based on 189,000 tons of steel/yr.
[d] Reference 25.
[e] Reference 26.
[f] Estimated.
[g] Reference 27.
[h] Reference 28. Based on 1,450,000 tons of steel/yr.
[i] Reference 29. Based on 1,450,000 tons of steel/yr.
[j] Assumed equivalent to BOF costs.
[k] Reference 28. Based on 293,000 tons of steel/yr.
[l] Reference 29. Based on 293,000 tons of steel/yr.
[m] Reference 30.
[n] Reference 31. Based on 511,500 tons of steel/yr.
[o] Reference 32. Based on 511,500 tons of steel/yr.

[p] Hooding, control device (wet or dry electrostatic precipitator, fabric filter, wet scrubber, etc.) is required only if hand scarfing is performed extensively; otherwise, no control is recommended.

2.2.3.5 Recommended Reasonably Available Control Measures (RACM)--

The RACM selections for steel manufacturing fugitive emission sources are presented in Table 2.2.3-2.

No controls are suggested for the scrap steel and flux material unloading, transfer and storage operations since these sources are very minor.

The control recommended for the transfer of molten pig iron to charge ladles is hooding the transfer area and collecting the emissions in a fabric filter.

The selected RACM for basic oxygen furnace charging, leaking and tapping emissions is the installation of local hoods that are vented to the existing primary control device for the furnace. This option presents the most reasonable cost of the three control techniques available and is more easily implemented than the other alternatives. If the capacity of the existing control device is inadequate, a new device may be required. However, this should also be less expensive than full enclosure of the furnace, although no cost data is available.

The RACM selected for open hearth furnace charging, leaking and tapping is operating precautions which consist of automating checker reversals and installing pressure sensors to maintain a negative pressure within the furnace. This should adequately control furnace leaks and provide some degree of control over charging emissions. Tapping emissions would be uncontrolled under this control option. This control method was selected because none of the other alternatives was deemed to be cost-effective, and such precautions are to be employed at one major Ohio open hearth furnace operation.

The RACM selected for electric arc furnace charging, leaking and tapping emissions is direct furnace evacuation to a fabric filter. This option offers very good control (90%) in addition to being the least expensive of the available control options.

The control recommended for the molten steel reladling station or continoous casting operations for leaded steels is hooding to a fabric filter. No control is recommended for these sources where unleaded steel is handled since the emissions are less, and other controls are not cost effective. No control is also recommended for conventional teeming due primarily to the infeasibility of installing controls on such operations.

The RACM recommended for fugitive emissions from hand scarfing is hooding and local exhaust to control device such as a wet or dry electrostatic precipitator, fabric filter or wet scrubber. However, this RACM selection is only for those operations which perform hand scarfing extensively. For those operations which perform hand scarfing infrequently (not on a regular production basis), installation of such controls will not be cost-effective; and, therefore, no control is warranted.

REFERENCES FOR SECTION 2.2.3

1. Technical Guidance for Control of Industrial Process Fugitive Particulate Emissions. EPA-450/3-77-010, March 1977. pp. 2-84 through 2-87.

2. PEDCo Environmental, Inc. Development of Air Pollution Control Cost Functions for the Integrated Iron and Steel Industry. Prepared for U.S. Environmental Protection Agency, Washington, D.C. Contract No. 68-01-4600. July 1979. pp. B-16 and B-17.

3. Ibid. pp. B-19 and B-20.

4. Trenhold, Andrew. Personal Communication. U.S. Environmental Protection Agency, Durham, North Carolina. To Thomas Janszen, PEDCo Environmental, Inc., Cincinnati, Ohio. September 23, 1976.

5. Op. cit. Reference 2. p. B-21.

6. Op. cit. Reference 1. p. 2-89.

7. Cuscino, Thomas A., Jr. Particulate Emission Factors Applicable to the Iron and Steel Industry. Draft report. Prepared for U.S. Environmental Protection Agency. Contract No. 68-02-2609. Research Triangle Park, North Carolina. April 1979. p. 55.

8. Ibid. p. 56.

9. Threshold Limit Values for Chemical Substances in Workroom Air Adopted by ACGIH for 1976. American Conference of Governmental Industrial Hygienists. 1976. p. 20.

10. Iversen, Reid. Personal Communication. U.S. Environmental Protection Agency, Office of Air Programs. Research Triangle Park, North Carolina. To PEDCo Environmental, Inc., Cincinnati, Ohio.

11. Gutow, B.S. An Inventory of Iron Foundry Emission. Modern Castings. January 1972.

12. Midwest Research Institute. A Study of Fugitive Emissions from Metallurgical Processes. U.S. Environmental Protection Agency, Industrial Environmental Research Laboratory. Contract No. 68-02-2120. Monthly Progress Report No. 9. Research Triangle Park, North Carolina. July 15, 1976.

13. Vandegrift, A.E. and L.J. Shannon. Handbook of Emissions, Effluents, and Control Practices for Stationary Particulate Pollution Sources. Midwest Research Institute. Prepared for U.S. Environmental Protection Agency. Contract No. CPA 22-69-104. November 1, 1970.

14. Notes prepared by G. McGutchen. U.S. Environmental Protection Agency, Office of Air Quality Planning and Standards. Research Triangle Park, North Carolina. February 1976.

15. Nicola, G. Fugitive Emissions Control in the Steel Industry. Iron and Steel Engineer. July 1976.

16. Brough, J.R. and W.A. Carter. Air Pollution Control of An Electric Furnace Steelmaking Shop. Journal of the Air Pollution Control Association. 22:167-171. 1972.

17. Hardison, L.C. and Carroll Greathouse. Air Pollution Technology and Costs in Nine Selected Areas. Industrial Gas Cleaning Institute, Inc. Prepared for U.S. Environmental Protection Agency. Contract No. 68-02-0301. Durham, North Carolina. September 30, 1972.

18. Flux, J.H. The Control of Fume from Electric Arc Steelmaking. Iron and Steel International. June 1974.

19. McMullen, R.M. The Steel Industry Viewpoint on Air Pollution Control Regulations and Standards. Air Pollution Control Association Specialty Conference on Air Quality Standards and Measurements. October 13-14, 1974.

20. Kaercher, V.T. and V.D. Sensenbaugh. Air Pollution Control for an Electric Furnace Melt Shop. Iron and Steel Engineer. May 1974.

21. Background Information for Standards of Performance: Electric Arc Furnaces in the Steel Industry, Vol. 1. Proposed Standards, EPA-450/2-74-017a. Office of Air Quality Planning and Standards, U.S. Environmental Protection Agency, October 1974. p. 144.

22. Op. cit. Reference 2. p. D-3.

23. Ibid. p. 4-8.

24. Ibid. p. 4-11.

25. Bohn, Russel, T. Cuscino, Jr. and C. Cowherd, Jr. Fugitive Emissions from Integrated Iron and Steel Plants. Midwest Research Institute. EPA-600/2-78-050. Washington, D.C. March 1978. p. 5-17.

26. Ibid. p. 5-7.

27. Op. cit. Reference 2. p. D-4.

28. Ibid. p. 4-7.

29. Ibid. p. 4-12.

30. Ibid. p. D-5.

31. Ibid. p. 4-9.

32. Ibid. p. 4-13.

33. Varga, Jr., J., and H.W. Lownie, Jr. A System Analysis Study of the Integrated Iron and Steel Industry. Columbus, Ohio, Battelle Memorial Institute. May 15, 1969.

34. Inspection Manual for Enforcement of New Source Performance Standards: Basic Oxygen Process Furnaces. Engineering-Science, Inc. Prepared for U.S. Environmental Protection Agency, Division of Source Enforcement, Washington, D.C. Contract No. 68-02-1086. January 1977. p. 3-3.

35. Weisburd, M.I. Field Operations and Enforcement Manual for Air Pollution Control; Volume III: Inspection Procedures for Specific Industries. Pacific Environmental Services, Inc. Prepared for U.S. Environmental Protection Agency, Office of Air Programs, Research Triangle Park, North Carolina. Contract No. CPA 70-122. August 1972. p. 7.4.7.

36. Bohn, R., T. Cuscino, Jr., and C. Cowherd, Jr. Fugitive Emissions from Integrated Iron and Steel Plants. Midwest Research Institute. Prepared for U.S. Environmental Protection Agency, Industrial Environmental Research Laboratory, Office of Energy, Minerals and Industry, Research Triangle Park, North Carolina. Contract No. 68-02-2120. EPA/2-78-050. March 1978. p. 5-20.

37. Ibid. p. 5-18.

38. Ibid. p. 5-4.

39. Ibid. p. 5-9.

APPENDIX FOR SECTION 2.2.3

Average OHF capacity in Ohio = 189,000 tpy
" BOF " " " = 1,450,000 tpy
" EAF " " " = 293,000 tpy

(1) Scrap steel unloading, transfer, and storage
No control

(2) Flux material unloading, transfer and storage
No control

(3) Molten pig iron transfer to charge ladles

Hooding, fabric filter (Reference 22)

Average process size = 600,000 tpy (avg. of OHF, BOF and EAF capacities)
Emissions = 0.19 (600,000) = 114,000 lbs/yr

$$\text{Capital cost} = 39{,}837.9\ (189{,}000)^{0.246}\ \frac{(249.6)}{(204.1)}$$
$$= \$968{,}000$$

$$\text{Annual cost} = 15{,}910.3\ (189{,}000)^{0.162}\ \frac{(249.6)}{(204.1)} + .17\ (968{,}000) = \$304{,}000$$

$$C/B = \frac{\$304{,}000/\text{yr}}{.98\ (114{,}000)} = \$2.72/\text{lb}$$

(4) Basic oxygen furnace (charging, leaking, tapping)
Emissions = 0.5 (1,450,000) = 725,000 lbs/yr

Building evacuation, fabric filter (Reference 25)

$$\text{Capital cost} = \$7{,}713{,}000\ \frac{(249.6)}{(204.1)}$$
$$= \$9{,}432{,}000$$

$$\text{Annual cost} = 1{,}243{,}600\ \frac{(249.6)}{(204.1)} + .17\ (9{,}432{,}000)$$
$$= \$3{,}124{,}000$$

$$C/B = \frac{\$3{,}124{,}000/\text{yr}}{.99\ (725{,}000)} = \$4.35/\text{lb}$$

Charging / tapping emissions = 1.52 (1,450,000) = 2,204,000 lbs/yr

Furnace enclosure, fabric filter (Reference 27)

$$\text{Capital cost} = 8{,}578.1\ (1{,}450{,}000)^{0.443}\ \frac{(249.6)}{(204.1)}$$
$$= \$5{,}627{,}000$$

$$\text{Annual cost} = 536.9\ (1{,}450{,}000)^{0.467}\ \frac{(249.6)}{(204.1)}$$
$$+ .17\ (5{,}627{,}000)$$
$$= \$1{,}452{,}000$$

$$C/B = \frac{\$1{,}452{,}000/yr}{.92\ (2{,}204{,}000)} = \$0.72/lb$$

Local hoods, vent to existing furnace control device (Reference 27)

$$\text{Capital cost} = 163.8\ (1{,}450{,}000)^{0.606}\ \frac{(249.6)}{(204.1)}$$
$$= \$1{,}085{,}000$$

$$\text{Annual cost} = 1{,}559.4\ (1{,}450{,}000)^{0.283}\ \frac{(249.6)}{(204.1)}$$
$$+ .17\ (1{,}085{,}000)$$
$$= \$290{,}000$$

$$C/B = \frac{\$290{,}000/yr}{.6\ (2{,}204{,}000)} = \$0.22/lb$$

(5) Open hearth furnace (charging, tapping, leaking)
Emissions = 0.168 (189,000) = 32,000 lbs/yr

Building evacuation, fabric filter

See BOF

$$C/B = \frac{\$3{,}124{,}000/yr}{.99\ (32{,}000)} = \$98.61/lb$$

Furnace enclosure, fabric filter

See BOF

$$C/B = \frac{\$1{,}452{,}000/yr}{.92\ (32{,}000)} = \$49.32/lb$$

Local hooding, vent to existing furnace control device

See BOF

$$C/B = \frac{\$290{,}000/yr}{.60\ (32{,}000)} = \$15.10/lb$$

(6) Electric arc furnace (charging, leaking, tapping)
Emissions = 1.2 (293,000) = 352,000 lbs/yr

Building evacuation, fabric filter (Reference 27)

$$\text{Capital cost} = 11{,}932.0\ (293{,}000)^{0.514}\ \frac{(249.6)}{(204.1)}$$
$$= \$9{,}421{,}000$$

$$\text{Annual cost} = 905.7\ (293{,}000)^{0.581}\ \frac{(249.6)}{(204.1)}$$
$$+\ 0.17\ (9{,}421{,}000)$$
$$= \$3{,}264{,}000$$

$$C/B = \frac{\$3{,}264{,}000/\text{yr}}{.99\ (352{,}000)} = \$9.37/\text{lb}$$

Canopy hoods, fabric filter (Reference 27)

$$\text{Capital cost} = 1{,}438.9\ (293{,}000)^{0.643}\ \frac{(249.6)}{(204.1)}$$
$$= \$5{,}763{,}000$$

$$\text{Annual cost} = 106.3\ (293{,}000)^{0.709}\ \frac{(249.6)}{(204.1)}$$
$$+\ .17\ (5{,}763{,}000)$$
$$= \$1{,}957{,}000$$

$$C/B = \frac{\$1{,}957{,}000/\text{yr}}{.97\ (352{,}000)} = \$5.73/\text{lb}$$

Furnace evacuation, fabric filter (Reference 27)

$$\text{Capital cost} = 95.5\ (293{,}000)^{0.783}\ \frac{(249.6)}{(204.1)}$$
$$= \$2{,}228{,}000$$

$$\text{Annual cost} = 22.7\ (293{,}000)^{0.773}\ \frac{(249.6)}{(204.1)}$$
$$+\ 0.17\ (2{,}228{,}000)$$
$$= \$846{,}000$$

$$C/B = \frac{\$846{,}000/\text{yr}}{.9\ (352{,}000)} = \$2.67/\text{lb}$$

7 Molten steel reladling
Emissions (leaded) = 0.81 (600,000) = 486,000 lbs/yr

Hooding, fabric filter

See 3

$$C/B = \frac{\$304{,}000/\text{yr}}{.98\ (486{,}000)} = \$0.64/\text{lb}$$

Emissions (unleaded) = 0.07 (600,000) = 42,000 lbs/yr

Hooding, fabric filter

See (3)

$$C/B = \frac{\$304,000/yr}{.98\ (42,000)} = \$7.39/lb$$

(8) Continuous casting

Emissions (leaded) = 486,000 lbs/yr
Emissions (unleaded) = 42,000 lbs/yr

Hooding, fabric filter (Reference 30)

$$\text{Capital cost} = 1,457,337\ (511,500)^{0.025}\ \frac{(249.6)}{(204.1)}$$
$$= \$2,476,000$$

$$\text{Annual cost} = 226,810.3\ (511,500)^{0.013}\ \frac{(249.6)}{(204.1)}$$
$$+ .17\ (2,476,000) = \$750,000$$

$$C/B\ (\text{leaded}) = \frac{\$750,000/yr}{.92\ (486,000)} = \$1.68/lb$$

$$C/B\ (\text{unleaded}) = \frac{\$750,000/yr}{.92\ (42,000)} = \$19.40/lb$$

(9) Scarfing

No data

2.3 LIME PLANTS

2.3.1 Process Description[1]

Lime (CaO or CaO·MgO) is manufactured by calcining limestone ($CaCO_3$ or $CaCO_3 \cdot MgCO_3$) to release carbon dioxide. Three grades of limestone are used in lime manufacture: high calcium or calcite where the magnesium carbonate content is less than 5 percent; magnesium limestone where magnesium carbonate is 5 to 50 percent; and dolomitic limestone or dolomite where magnesium carbonate is 30 to 40 percent. Regardless of grade, the basic process remains the same and is illustrated in Figure 2.3-1.

More than 90 percent of the lime plants are located in close proximity to a limestone quarry. At the quarry, the natural limestone deposits are extracted through a series of physical operations. The basic operations are drilling and blasting. The stone may be crushed and screened before shipment to the lime plant. Quarrying operations are discussed in Section 2.18.

In the United States, limestone is calcined in either rotary or vertical (shaft) kilns. Rotary kilns predominate and require secondary crushing of the feed limestone. Most vertical kilns require only primary crushing of the feed although some are designed to require secondary crushing.

Rotary kilns are long, inclined steel cylinders lined with refractory brick and supported on rollers. The feed limestone flows countercurrent to hot combustion gases, with pebble-size limestone added at one end and hot combustion gases entering the other end. Rotary kilns may be fueled with coal, oil or gas.

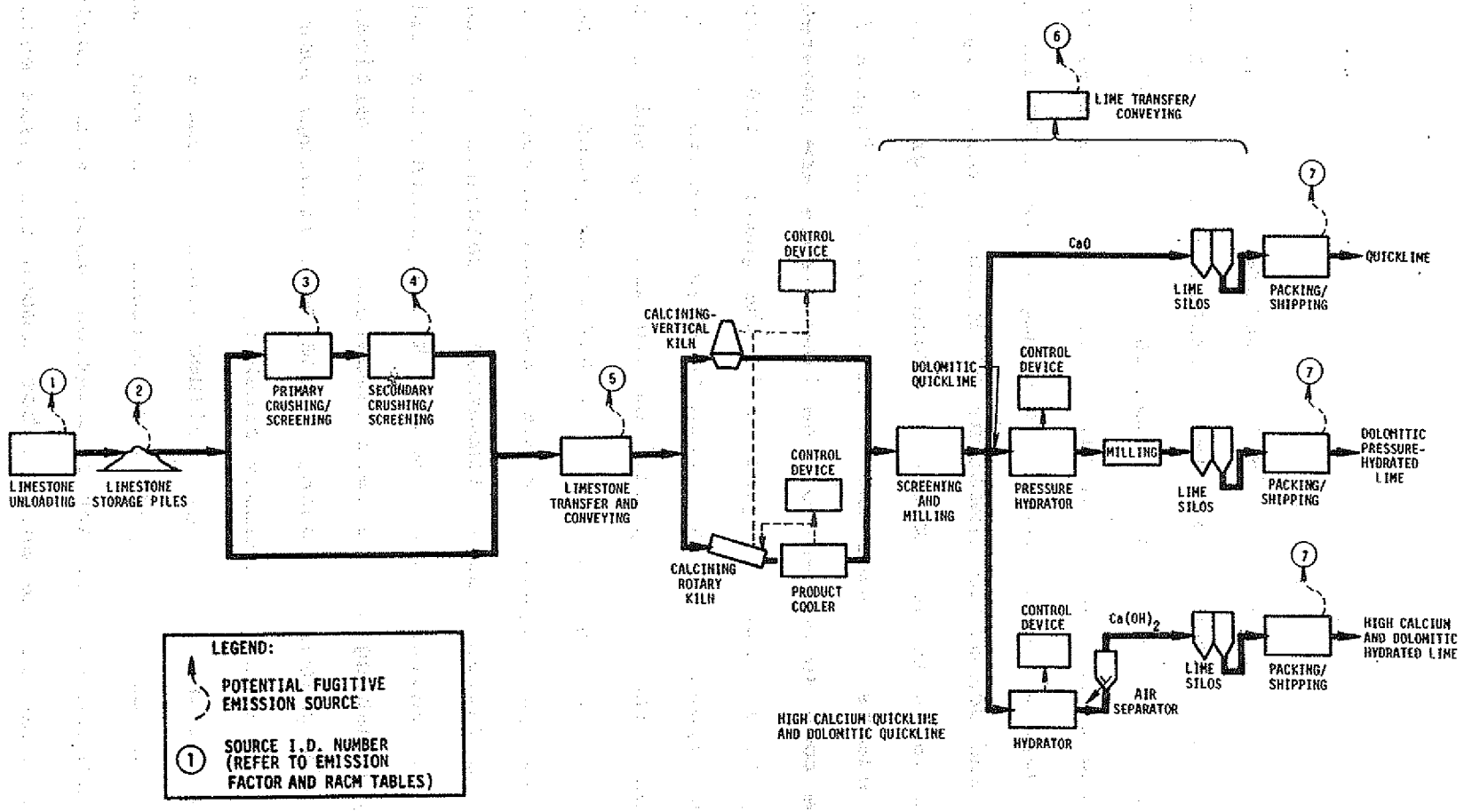

Figure 2.3-1. Process flow diagram and fugitive emission sources for lime manufacturing.

There are three distinct zones in a rotary kiln: the feed and drying zone, the central or preheating zone and the calcining zone. Product coolers are used to recover heat from the calcined lime.

Vertical kilns, which are fueled by oil or natural gas, have four distinct zones from top to bottom: the stone storage zone, the preheating zone, the calcining zone and the cooling and discharge zone. The flow of stone in the kiln is countercurrent to the flow of cooling air and combustion gases. The stone is charged at the top and preheated by the hot exhaust gases from the calcining zone. Air blown into the bottom of the kiln cools the lime before it is discharged. This air is heated sufficiently by the time it reaches the calcining zone to be used as secondary combustion air.

In both vertical and rotary kilns, the temperature in the feed end is kept below 1000°F, and the temperatures in the preheating and calcining zones are between 2000° and 2400°F. Higher temperatures are found in shorter kilns. At these temperatures, limestone disassociates to quicklime and carbon dioxide.

$$CaCO_3 \rightarrow CaO + CO_2$$

Most of the calcined lime or quicklime is screened, milled and transferred pneumatically or by belt conveyor to storage silos, where it is kept until it is shipped. Fines from calcination can be briquetted, fed to a hydrator or pulverized, as the market demands.

About 10 percent of all the lime produced is converted to hydrated (slaked) lime.

$$CaO + H_2O \rightarrow Ca(OH)_2$$

In the hydration process, water is added to crushed or ground quicklime in a mixing chamber (hydrator). The slaked lime is dried by the heat of the hydration reaction, and is conveyed to an air separator in preparation for final shipment. Dolomitic, pressure-hydrated lime has an additional milling step prior to shipment. Atmospheric hydrators are operated continuously; pressure hydrators are operated in a batch mode.

For shipping, the quicklime and hydrated lime products are packaged in bags and handled in bulk by truck, rail, ship or barge.

Lime manufacturing plants have capacities between 50 and 650 tons per day. Plants usually operate 24 hours per day for 6 or 7 days a week.

At the lime plant, the sources of fugitive emissions include raw material unloading, open storage piles, crushing, screening, conveying and transfer operations, packaging and shipping operations and haul roads. These are indicated in Figure 2.3-1. Quarrying the limestone also produces fugitive emissions, but these sources are treated in Section 2.1.4.

2.3.2. Fugitive Dust Emission Factors

The estimated emission factors for the lime manufacturing fugitive dust sources as identified in Section 2.3.1 are summarized in Table 2.3-1. The source of most of these emission

TABLE 2.3-1. FUGITIVE DUST EMISSION FACTORS FOR LIME MANUFACTURING

	Source	Emission factor	Reliability rating	Reference
1	Unloading	0.03 - 0.4 lb/ton unloaded	E	2
2	Limestone storage[a]			
	Loading onto pile	0.04 lb/ton loaded	D	3
	Vehicular traffic	0.12 lb/ton stored	D	3
	Loading out	0.05 lb/ton loaded out	D	3
	Wind erosion	0.10 lb/ton stored	D	3
3	Primary crushing	0.5 lb/ton crushed	C	4
4	Secondary crushing and screening	1.5 lb/ton crushed[b]	C	5
5	Limestone conveying and transfer	0.8 lb/ton lime produced	E	6
6	Product transfer and conveying[c]	0.1 lb/ton lime produced	E	7
7	Packaging and shipping[d]	0.25 lb/ton shipped	E	8

[a] Assuming PE = 101, K_1 = 0.75, K_2 = 0.75, K_3 = 0.75, S = 2, D = 60.

[b] Based upon raw material entering primary crusher.

[c] Includes leaks from mills and feed/discharge exhausts.

[d] Includes storage silo vents.

factors is EPA's "Technical Guidance for Control of Industrial Process Fugitive Particulate Emissions." The emission factor reliability rating indicates that these are engineering estimates applicable only to a group of such sources and of questionable accuracy for site-specific estimates.

The emission factor for unloading operations is based upon those developed for similar processes through engineering judgment or visual observation. This estimate would be considered of fair reliability on a source-specific basis. It is unclear from the referenced source how the emission factor for storage piles was derived,but it has a rather low reliability rating indicating that it is based on limited data and engineering judgment. The emission factors for primary crushing operations and for secondary crushing and screening are based upon very limited data for crushing of granite and would be considered of fair reliability. The emission factor for raw material transfer and conveying is based on data from a similar operation and on engineering judgment and should,therefore,be considered of poor reliability. The factor for packaging and shipping is based upon data for hydraulic cement and engineering judgment. The reliability of this factor is also poor.

Haul roads are discussed in detail in Section 2.1 and are not addressed here.

2.3.3 Particle Characterization

Fugitive particulate emissions from limestone storage, handling and transfer typically have a mean particle diameter of

There are three distinct zones in a rotary kiln: the feed and drying zone, the central or preheating zone and the calcining zone. Product coolers are used to recover heat from the calcined lime.

Vertical kilns, which are fueled by oil or natural gas, have four distinct zones from top to bottom: the stone storage zone, the preheating zone, the calcining zone and the cooling and discharge zone. The flow of stone in the kiln is countercurrent to the flow of cooling air and combustion gases. The stone is charged at the top and preheated by the hot exhaust gases from the calcining zone. Air blown into the bottom of the kiln cools the lime before it is discharged. This air is heated sufficiently by the time it reaches the calcining zone to be used as secondary combustion air.

In both vertical and rotary kilns, the temperature in the feed end is kept below 1000°F, and the temperatures in the preheating and calcining zones are between 2000° and 2400°F. Higher temperatures are found in shorter kilns. At these temperatures, limestone disassociates to quicklime and carbon dioxide.

$$CaCO_3 \rightarrow CaO + CO_2$$

Most of the calcined lime or quicklime is screened, milled and transferred pneumatically or by belt conveyor to storage silos, where it is kept until it is shipped. Fines from calcination can be briquetted, fed to a hydrator or pulverized, as the market demands.

About 10 percent of all the lime produced is converted to hydrated (slaked) lime.

$$CaO + H_2O \rightarrow Ca(OH)_2$$

In the hydration process, water is added to crushed or ground quicklime in a mixing chamber (hydrator). The slaked lime is dried by the heat of the hydration reaction, and is conveyed to an air separator in preparation for final shipment. Dolomitic, pressure-hydrated lime has an additional milling step prior to shipment. Atmospheric hydrators are operated continuously; pressure hydrators are operated in a batch mode.

For shipping, the quicklime and hydrated lime products are packaged in bags and handled in bulk by truck, rail, ship or barge.

Lime manufacturing plants have capacities between 50 and 650 tons per day. Plants usually operate 24 hours per day for 6 or 7 days a week.

At the lime plant, the sources of fugitive emissions include raw material unloading, open storage piles, crushing, screening, conveying and transfer operations, packaging and shipping operations and haul roads. These are indicated in Figure 2.3-1. Quarrying the limestone also produces fugitive emissions, but these sources are treated in Section 2.1.4.

2.3.2. Fugitive Dust Emission Factors

The estimated emission factors for the lime manufacturing fugitive dust sources as identified in Section 2.3.1 are summarized in Table 2.3-1. The source of most of these emission

3 to 6 μm, 45 to 70 percent of which are less than 5 μm.[9]

The following information pertaining to stack emission characteristics is presented since it is likely that the data closely parallels that of fugitive emissions.[10,11]

Operation	Particle size distribution
Hammermill (crusher)	30% < 3 μm, 47% < 5 μm, 60% < 10 μm 74% < 20 μm, 86% < 40 μm
Screening	46% < 3 μm, 72% < 5 μm, 85% < 10 μm 95.5% < 20 μm, 98.8% < 40 μm
Bagging house	71% < 5 μm, 87.3% < 10 μm 96% < 20 μm, 98.8% < 40 μm

Data on the characteristics of the particles emitted from other sources are not available.

The American Conference of Governmental Industrial Hygienists has identified limestone particles as nontoxic nuisance particulates if other toxic impurities are not present.[12] However, data on other toxic materials that may be associated with limestone were not available. Lime dust has been identified as a potential health hazard at concentrations above 5 $\mu g/m^3$.[13]

2.3.4 Control Methods[14]

Emissions from limestone unloading are generally not controlled. Building enclosures may be used to reduce emissions. Liquid sprays are also sometimes used to suppress emissions during unloading. Occasionally, the unloading area is vented to a baghouse.

The limestone is nearly always stored in stockpiles, a source of fugitive particulate emissions, but in some cases it may be stored in silos. Liquid spraying of the material before discharge onto the storage pile is often practiced to reduce the emission potential. Telescoping chutes, adjustable stacker conveyors and stone ladders are possible ways to reduce emissions from loading onto the raw material storage piles. All of these devices reduce the free-fall distance and, hence, the fugitive emissions. These devices are described in Section 2.1.

Emissions from conveying are minimal, but the belts are sometimes partially covered as an emission reduction measure. Emissions caused by transfer of materials from one conveyor belt to another are most often controlled by enclosure or water sprays, with an increasing trend toward control by venting the transfer point to a baghouse.

Primary crushers and secondary crushers and screens are often located below grade. This constitutes a windbreak and reduces the carry-out and impact of the emissions. Suppression of dusts by water sprays at the feed points of these operations is very common. Emissions from primary crushers are sometimes controlled by wet scrubbers or fabric filters. An increasing number of plants are venting the discharge points of secondary crushing and screening to a fabric filter.

Particulates entrained in the air displaced during loading of the silos are controlled by fabric socks on the vents. In pneumatic systems the lime silo transport air is often exhausted through a fabric filter.

During packaging and processing for bulk shipment, the emissions that arise are frequently controlled by aspiration through fabric filters. Many lime plants use a gravity-feed fill spout mechanism that has outer concentric aspiration ducts to vent the dust to a fabric filter. This device has been markedly successful in reducing emissions during packing and shipping.[15]

Transfer, conveying and screening of the finished quicklime and slaked lime can be a considerable fugitive emission problem if these sources are not properly enclosed and exhausted. Nearly all plants completely enclose the conveyor systems, which are most often belt-type; and many of them also enclose transfer points and screens and exhaust the emissions to fabric filters.

Table 2.3-2 summarizes the available control techniques, their effectiveness, estimated costs and RACM selections.

2.3.5. Recommended Reasonably Available Control Measures (RACM)

The RACM selections for lime plant fugitive sources are presented in Table 2.3-2. As indicated, the recommended control for truck unloading, stockpiling, primary crushing, secondary crushing/screening and transfer and conveying operations of the limestone is a wet dust suppression system utilizing a chemical wetting agent. This system gives good control efficiency (estimated 90%[29]) and reduces visible emissions to almost zero opacity.[22] The system of enclosures with venting to fabric filters for the sources mentioned above would be slightly more

TABLE 2.3-2. A SUMMARY OF THE CONTROL ALTERNATIVES, EFFICIENCIES AND COSTS, AND THE RACM SELECTIONS FOR FUGITIVE DUST EMISSIONS FROM LIME PLANTS

Fugitive dust sources	Control alternatives	Control efficiency,%	Control costs, Jan., 1980 $		Cost benefit, $/lb	RACM selection
			Capital	Annualized		
(1) Limestone unloading (truck)	Enclosure, vent to fabric filter	99[a,b]	87,400[c]	21,000[d]	0.22	Wet suppression (chemical)
	Wet suppression (chemical)[e]	95[f,g]	64,000[h]	15,700[i]	0.01	
	Enclosure	50[j]	15,000[k]	2,600[l]	0.05	
(2) Limestone storage piles						
Loading onto piles	Enclosure	70-99[m]	950,000[n]	162,000[l]	2.75	Wet suppression (chemical)
	Wet suppression (chemical)	80-90[m]	o	o	0.01	
	Adjustable chutes	75[m]	44,000[p]	7,500[l]	0.56	
Loading out	Wet suppression (chemical)	80-90	o	o	0.01	Wet suppression (chemical)
	Gravity feed onto conveyor	80[m]	q	q	Not Available	
Wind erosion	Enclosure	95-99[m]	r	r	2.75	Watering
	Wet suppression (chemical)	90[m]	6,000[s]	8,000[p]	0.20	
	Watering	50[m]	5,000[s]	2,600[p]	0.12	
(3) Primary crushing and screening	Wet suppression (chemical)	90[t]	o	o	0.01	Wet suppression (chemical)
	Enclosure, vent to fabric filter	95[u]	130,000[v]	33,000[w]	0.03	

(continued)

TABLE 2.3-2. (continued)

Fugitive dust sources	Control alternatives	Control efficiency,%	Control costs, Jan., 1980 $ Capital	Control costs, Jan., 1980 $ Annualized	Cost benefit, $/lb	RACM selection
(4) Secondary crushing and screening	Wet suppression (chemical)	90[t]	o	o	0.01	Wet suppression (chemical)
	Enclosure, vent to fabric filter	95[u]	x	x	0.03	
(5) Limestone conveying and transfer	Wet suppression (chemical)	90[t]	o	o	0.01	Wet suppression (chemical)
	Enclosure, vent to fabric filter	95[u]	x	x	0.03	
(6) Product transfer, conveying and screening	Enclosure, vent to fabric filter	95[y]	45,000[z]	12,000[aa]	0.50	Enclosure, vent to fabric filter
	Pneumatic conveying	99[bb]	99,000[cc]	21,200[dd]	0.85	
(7) Packaging and shipping	Vent to fabric filter	99[ee]	64,000[ff]	18,000[gg]	0.29	Vent to fabric filter
	Choked feed, aspiration to fabric filter	99[m]	96,000[hh]	23,500[i]	0.38	
Haul roads	Wet suppression(chem.)	50[ii]	jj	jj		Wet-suppression (chemical), oiling or paving; and good housekeeping
	Watering	50[ii]	jj	jj		
	Oiling	85[ii]	jj	jj		
	Paving	85[ii]	jj	jj		

(continued)

TABLE 2.3-2. (continued)

a Reference 16.
b No visible emissions after control per Reference 17.
c Based upon 20'x20'x15' enclosure and a jet pulse baghouse treating 10,000 acfm @ 70° with a 6.5 to 1 air/cloth ratio.
Data from References 18 and 19.
d Reference 20. Based on 3000 h/yr operation.
e Note that wet suppression systems are not applicable to throughput rates less than 75 ton/h.
f Reference 21.
g Visible emissions reduced to 0% (5% opacity observed on rare occasions). Reference 22.
h Reference 23. Based on 150 ton/h throughput capacity. Includes application at unloading, primary crusher inlet and outlet, secondary crusher inlet and outlet, stockpile loadout, and transfer points.
i Reference 24. Based on 3000 h/yr operation.
j Estimated.
k Reference 25. Based on 20'x20'x30' enclosure.
l Includes capital charges only.
m Reference 26.
n Reference 27. Based on average storage at 12,000 tons.
o The costs are included in the figure for wet suppression of unloading.
p Reference 27.
q Costs not available. A common practice at rock processing plants (limestone).
r Costs included in enclosure for loading onto piles.
s Reference 28.
t Reference 29.
u Reference 30.
v Reference 16. Based on 20,000 acfm and control of secondary crushing and screening, and limestone conveying and transfer.
w Reference 20. Based on 3000 h/yr operation.
x Costs for this system included in figures for primary crushing control.
y Assumed same as control of limestone transfer and conveying.
z Reference 16. Based on 5000 acfm.
aa Reference 20. Based on 3000 h/yr operation.
bb Assumed with control of conveying air by fabric filter.
cc Estimated based on Reference 31.
dd Estimated based on Reference 31, assuming 5,000 for operation and maintenance.
ee Estimated based on Reference 32. Includes aspiration of filler spouts.
ff Reference 16. Based on 10,000 acfm.
gg Reference 20. Based on 3000 h/yr operation
hh Reference 27.
ii Reference 33.
jj See Section 2.1.

effective (95%[30]) but would be much more costly to install. Comparative capital costs are $70,000 for the wet suppression system versus $217,400 for the fabric filter system on a 150 ton per hour limestone processing rate. Annualized costs are $23,700 for the wet suppression system versus $54,000 for the fabric filter system. A diagram of a wet suppression system as applied on limestone handling operation at a lime plant is given in Figure 2.3-2. A further justification is the fact that many lime plants utilize wet dust sprays in one form or another.[34]

The recommended control for lime product transfer, conveying and screening operations is enclosure with venting to a fabric filter designed to achieve .030 gr/dscf outlet or no visible emissions. Most plants already utilize enclosures on the product conveyors transfer points and screens and may vent these to fabric filters.[35] This system offers not only control of the emission source but also the added benefit of product recovery. The costs may be much less than indicated if a plant can vent the collected emissions to an existing collection device on associated product operations (i.e.,grinders, screens, air separators and elevators).

The recommended control technique for packaging and shipping operations varies by type of operation. For loading of trucks and rail cars, concentric aspiration to a fabric filter is the recommended control based on economics and control efficiency. For bagging operations, the recommended control is the venting of the bagging equipment to a fabric filter. While

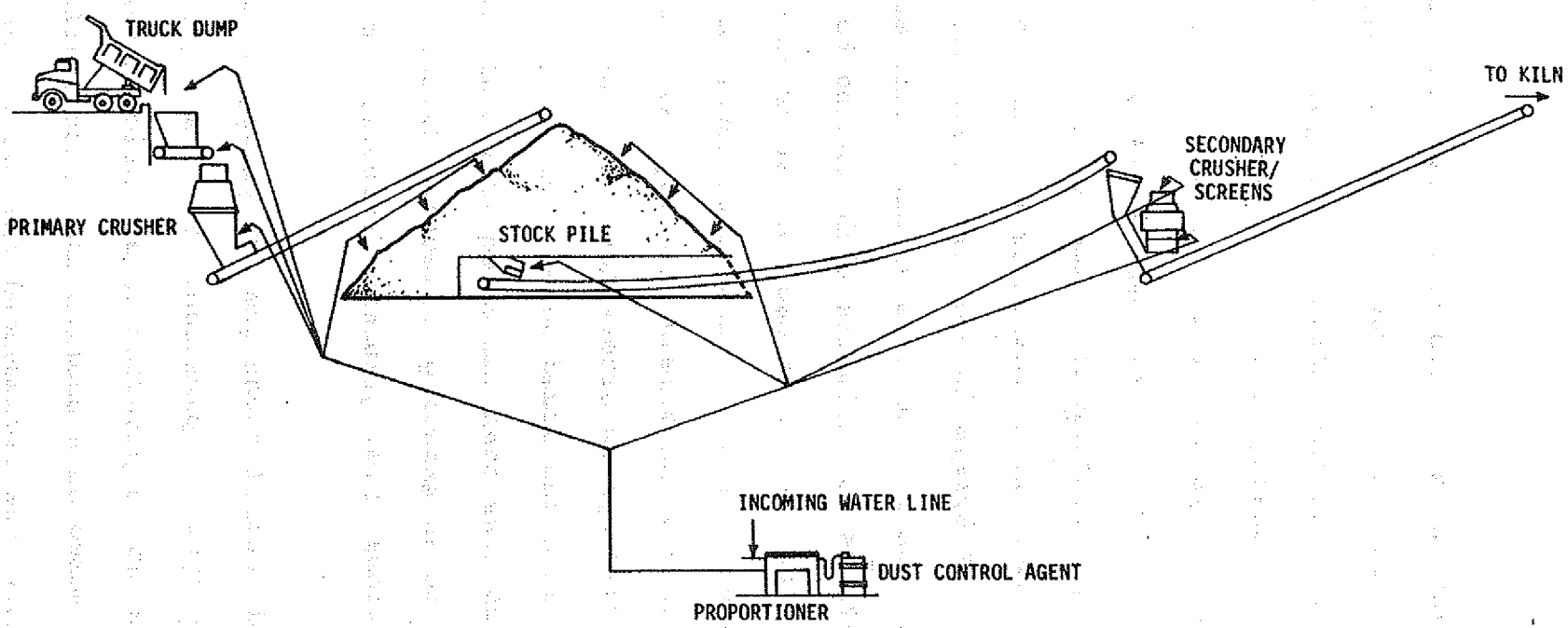

Figure 2.3-2. Wet dust suppression system applied on a lime plant.

Note: Wet suppression at fine mesh screens must be regulated properly to avoid blinding of screens.

expensive, this technique is very effective and offers the advantage of product recovery. It has been applied at several lime plants.[36] Both systems should be designed to achieve zero percent opacity or 0.030 gr/dscf outlet.

The control of haul road fugitive emissions can be either oiling, the use of wet suppression (chemical) or permanent paving. For roadways used constantly, a paving program followed by a good housekeeping program can best reduce emissions. Good housekeeping would include covering of haul trucks, periodic sweeping of the paved surface and prompt cleanup of spills. For temporary roads, a program of oiling or wet suppression (chemical) is recommended. This program is used at many lime plants and can be very economical if waste crusher oil can be utilized.[37]

REFERENCES FOR SECTION 2.3

1. PEDCo Environmental, Inc. Technical Guidance for Control of Industrial Process Fugitive Particulate Emissions. EPA-450/3-77-010, March 1977. pp. 2-297 through 2-299.

2. Ibid. p. 2-17.

3. Ibid. pp. 2-33 through 2-37.

4. Compilation of Air Pollutant Emission Factors. 2nd edition. U.S. Environmental Protection Agency, AP-42, February 1976. p. 8.20-1.

5. Ibid.

6. Op. cit., Reference 1. p. 2-301.

7. Ibid. p. 2-303.

8. Ibid.

9. A Study of Fugitive Emissions from Metallurgical Processes. Midwest Research Institute. Contract No. 68-02-2120. Monthly Progress Report No. 8. Kansas City, Missouri. March 8, 1976.

10. Particulate Pollutant System Study. Volume III - Handbook of Emissions Properties. Midwest Research Institute. Contract No. CPA 22-59-104. Kansas City, Missouri. May 1, 1971.

11. Shannon, L.J., P.G. Gorman, and M. Reichel, Particulate Pollutant System Study, Volume II - Fine Particulate Emissions. Midwest Research Institute. Prepared for U.S. Environmental Protection Agency, Air Pollution Control Office. Contract No. 22-69-104. Chapel Hill, North Carolina. August 1, 1971

12. Threshold Limit Values for Chemical Substances and Physical Agents in the Workroom Environment with Intended Changes for 1973. American Conference of Governmental Industrial Hygienists. Cincinnati, Ohio 1973. p. 53.

13. Ibid. p. 12.

14. Op. cit. Reference 1. pp. 2-305 through 2-308.

15. Op. cit. Reference 1. p. 2-307.

16. Industrial Gas Cleaning Institute, Inc. Nonmetallic Minerals Industries Control Equipment Costs. Prepared for U.S. Environmental Protection Agency, Research Triangle Park, North Carolina. Contract No. 68-02-1473, Task No. 19, February 1977. P. 3-3.

17. PEDCo Environmental, Inc. Control Techniques for the Crushed and Broken Stone Industry, EPA Contract Nos. 68-01-4147 and 68-02-2603, Cincinnati, Ohio. July, 1974. p. 3-38.

18. Op. cit. Reference 13. p. 3-3.

19. GARD, Inc. Capital and Operating Costs of Selected Air Pollution Control Systems. EPA-450/3-76-014, May 1976, pp. 4-24 to 4-28, 4-34 to 4-36, 4-89.

20. Op. cit. Reference 13. p.3-5.

21. Ibid. p. A-13.

22. Op. cit. Reference 15, p. 3-39.

23. Op. cit. Reference 13. p. 4-9.

24. Ibid. p. 4-12.

25. Op. cit. Reference 17. p. 4-25.

26. Op. cit. Reference 1. pp. 2-38 and 2-39.

27. Ibid. p. 2-39 and 2-40.

28. PEDCo Environmental, Inc. Source Evaluation in Region IV Non-Attainment Areas to Determine TSP Emission Reduction Capabilities. Prepared for U.S. Environmental Protection Agency, Research Triangle Park, North Carolina. Contract No. 68-02-2603, Task No. 2, June 1978. p. 2-87.

29. Op. cit. Reference 15. p. 3-15.

30. Op. cit. Reference 1. p. 2-245.

31. Minick, L. J. Control of Particulate Emissions from Lime Plants. In: 63rd Annual Meeting of the Air Pollution Control Association, St. Louis, June 1979. p. 19.

32. Op. cit. Reference 1. p. 2-20.

33. Ibid. p. 2-27.

34. Op. cit. Reference 29. p. 8.

35. Op. cit. Reference 1. p. 2-305, 2-307.

36. Op. cit. Reference 29. Appendix III.

37. Ibid. p. 16.

APPENDIX FOR SECTION 2.3

(1) Limestone unloading (truck)
Emissions = (0.215 lb/ton)(150 tph)(3,000 hpy) = 96,750 lbs/yr

Enclosure, vent to fabric filter

Assume an enclosure area = 20' x 15' x 20'
Total area (10 Ga plate skirts) = 1400 ft^2
Mass = (1,400 ft^2)(5.625 lb/ft^2)(1.2) = 9,450 lbs
Cost (labor & materials) = (0.208/lb + 0.30/lb)(9,450)
= $4,800

Top L/W = 1.333 L = 20' Area = 800 ft^2
Mass = (800 ft^2)(5.625 lb/ft^2)(1.2) = 5,400 lbs
Cost (materials) = (20ft)(11/ft) + (.208/lb)(5,400)
= $1,350
Cost (labor) = $1,200
Total cost = $2,550
Total enclosure direct cost = $7,350
1 elbow @ $260
Installed = 1.75 (260) = $500
Total direct costs (enclosure & elbow) = $7,850

$$\text{Turnkey} = 1.4\ (7{,}850)\ \frac{(249.6)}{(192.1)} = \$14{,}000$$

Baghouse turnkey cost (@ 10,000 acfm @ 70°F)

$$= \$60{,}000\ \frac{(249.6)}{(204.1)} = \$73{,}400 \quad \text{NMI}$$

Capital cost = $73,400 + 14,000 = $87,400
Annual cost (p. 3-5, NMI @ 3,000 hpy)

$$= \$15{,}000\ \frac{(249.6)}{(204.1)} + (.17)(14{,}000)$$

$$= \$21{,}000$$

$$C/B = \frac{\$21{,}000/yr}{.99\ (96{,}750)} = \$0.22/lb$$

Wet suppression (chemical)

Design at 75 tph throughput
Dust suppressant spray at unloading, primary crusher inlet and outlet, stockpile loadout, secondary crusher inlet and outlet and conveyor transfer points.

$$\text{Capital cost} = \$52{,}000\ \frac{(249.6)}{(204.1)} = \$64{,}000 \text{ p. 4-8, NMI}$$

$$\text{Annual cost} = \$12{,}810\ \frac{(249.6)}{(204.1)} = \$15{,}700 \text{ p. 4-11, NMI}$$

$$C/B = \frac{\$15{,}700/yr}{91{,}913 + 15{,}300 + 19{,}125 + 202{,}500 + 607{,}500 + 181{,}500} = \$0.01/lb$$

Enclosure

Assume a required 20' x 20' x 30' enclosure of 10 Ga steel (density = 5.625 lb/ft^2)

Mass = [(20' x 20')3 + (20' x 30')(2)](5.625)
= 13,500

Assume 20% excess for structurals

Mass = (13,500)(1.2) = 16,200 lbs

Cost (materials) = (16,200)(.208/lb) p. 4-25, GARD
= $3,400

Cost (labor) = (16,200)(0.30/lb) p. 4-25, GARD
= $4,900

Total direct capital cost = $8,300

Indirect capital cost @ 40% = $3,300

$$\text{Capital cost} = 11{,}600 \ \frac{(249.6)}{(192.1)} = \$15{,}000$$

Annual cost = 0.17(15,000) = $2,600

No O & M cost

$$C/B = \frac{\$2{,}600/yr}{.5\ (96{,}750)} = \$0.05/lb$$

(2) Limestone storage piles

Emissions = 18,000 lbs/yr

Loading onto piles

Enclosure

Cost for enclosure ranges between 3.04 to 7.22 ft^3 of capacity (Reference 1, p. 2)

Use average value of $5.13/$ft^3$

Assume avg. of 12,000 tons in storage
(10 days)(8 hpd)(150 t/h)

Density of limestone = 169 lb/ft^3

$$\text{Volume of pile} = \frac{12{,}000\ (2{,}000)}{169} = 142{,}000\ ft^3$$

Capital cost = (142,000 ft^3)($5.13/$ft^3$) = $730,000

$$\$730{,}000 \ \frac{(249.6)}{(192.1)} = \$950{,}000$$

Annual cost = .17(950,000) = $162,000

$$C/B = \frac{\$162{,}000/yr}{0.85\ (18{,}000) + 0.97\ (45{,}000)} = \$2.75/lb$$

Adjustable chutes

$$\text{Capital cost} = \frac{26{,}000 + 42{,}000}{2} = \$34{,}000 \quad \text{Ref. 1, p. 2-40}$$

$$= 34{,}000 \frac{(249.6)}{(192.1)} = \$44{,}000$$

$$\text{Annual cost} = .17\ (34{,}000) = \$7{,}500$$

$$C/B = \frac{\$7{,}500/\text{yr}}{.75\ (18{,}000)} = \$0.56/\text{lb}$$

Wet suppression (chemical)

See 1
C/B = $0.01/lb

Loading out
Emissions = 22,500 lbs/yr

Wet suppression (chemical)

See 1
C/B = $0.01/lb

Gravity feed onto conveyor
Costs not available

Wind erosion
Emissions = 45,000 lbs/yr

Enclosure

See enclosure for loading onto piles in 2
C/B = $2.75/lb

Wet suppression (chemical)

Assume 109,000 tons/yr throughput
Initial cost = $5,000 (Reference 28, p. 2-87)

$$\text{Capital cost} = \$5{,}000 \frac{(249.6)}{(204.1)}$$

$$= \$6{,}000$$

Annual cost (@ $0.05/ton) =

$$[(109{,}000)(.05) + .17\ (6{,}000)] \frac{(249.6)}{(204.1)}$$

$$= \$8{,}000$$

Watering

Capital cost = $5,000 (Reference 28)
Annual cost (@ $0.01/ton) =
(109,000)(.01) + $1,000 = $2,100

$$\$2,100 \quad \frac{(249.6)}{(204.1)} = \$2,600/\text{lb}$$

$$C/B = \frac{\$2,600/\text{yr}}{.5\ (45,000)} = \$0.12/\text{lb}$$

3 Primary crushing and screening
Emissions = 225,000 lbs/yr

Wet suppression (chemical)

See 1
C/B = $0.01/lb

Enclosure, vent to fabric filter

Costs include controls for primary crushing, secondary crushing/screening and conveyor/transfer points (@ 110,000 tpy; 20,000 acfm), NMI

$$\text{Capital cost} = 105,412 \quad \frac{(249.6)}{(204.1)} = \$130,000$$

$$\text{Annual cost} = 26,867 \quad \frac{(249.6)}{(204.1)} = \$33,000$$

$$C/B = \frac{\$33,000/\text{yr}}{.95\ (225,000) + .95\ (675,000) + .95\ (201,600)}$$

$$= \$0.03/\text{lb}$$

4 Secondary crushing and screening
Emissions = 675,000 lbs/yr

Wet suppression (chemical)

See 1
C/B = $0.01/lb

Enclosure, vent to fabric filter

See 3
C/B = $0.03/lb

(5) Limestone conveying and transfer
Emissions = 201,600 lbs/yr

Wet suppression (chemical)

See (1)
C/B = $0.01/lb

Enclosure, vent to fabric filter

See (3)
C/B = $0.03/lb

(6) Product transfer, conveying and screening
Emissions = 25,200 lbs/yr

Enclosure, vent to fabric filter

Assume airflow of 5,000 acfm(NMI)

$$\text{Capital cost} = 37{,}000 \quad \frac{(249.6)}{(204.1)} = \$45{,}000$$

$$\text{Annual cost} = 9{,}800 \quad \frac{(249.6)}{(204.1)} = \$12{,}000$$

$$C/B = \frac{\$12{,}000/\text{yr}}{.95\ (25{,}200)} = \$0.50/\text{lb}$$

Pneumatic conveying

Capital cost = $99,000 (Reference 31)
Annual cost = $21,200 (Reference 31)

$$C/B = \frac{\$21{,}200/\text{yr}}{.99\ (25{,}000)} = \$0.85/\text{lb}$$

(7) Packing and shipping
Emissions = 63,000 lbs/yr

Vent to fabric filter

$$\text{Capital cost} = \$52{,}000 \ \frac{(249.6)}{(204.1)} \quad \text{NMI}$$
$$= \$64{,}000$$

$$\text{Annual cost} = \$14{,}500 \ \frac{(249.6)}{(204.1)}$$
$$= \$18{,}000$$

$$C/B = \frac{\$18{,}000/\text{yr}}{.99\ (63{,}000)} = \$0.29/\text{lb}$$

Choked feed, aspiration to fabric filter

Capital cost = $96,000
Annual cost = $23,500

$$C/B = \frac{\$23{,}500/\text{yr}}{.99\ (63{,}000)} = \$0.38/\text{lb}$$

2.4 POWER PLANTS

2.4.1 Process Description

Steam-electric generating plants in the United States may utilize a variety of fuels including coal, oil, gas and fissionable material. However, from a fugitive dust standpoint, only the plants fired with coal are of significance. The basic flow diagram of the power generation cycle for use of coal is illustrated in Figure 2.4-1.

The first step in the coal-fired power plant cycle is extraction of the coal. Coal is mined by several different methods including strip mining, underground mining and auger mining. After extraction the coal may be physically cleaned before loading for transportation to the power plant.

Coal may be transported to the power plant by trucks, pipeline, conveyor, rail or barge. After delivery, the coal is usually stored in storage piles. The coal is then moved from the storage pile to feed hoppers by a system of hoppers, stackers and conveyors. From the feed hoppers the coal is crushed, weighed, pneumatically conveyed to pulverizers and thereafter combusted in the boilers.

In the burning of coal, impurities present in the feed coal may not be combusted. The mineral ash and other noncombusted materials are usually collected and either slurried with water and pumped to a disposal pond or collected dry and trucked to a disposal area.

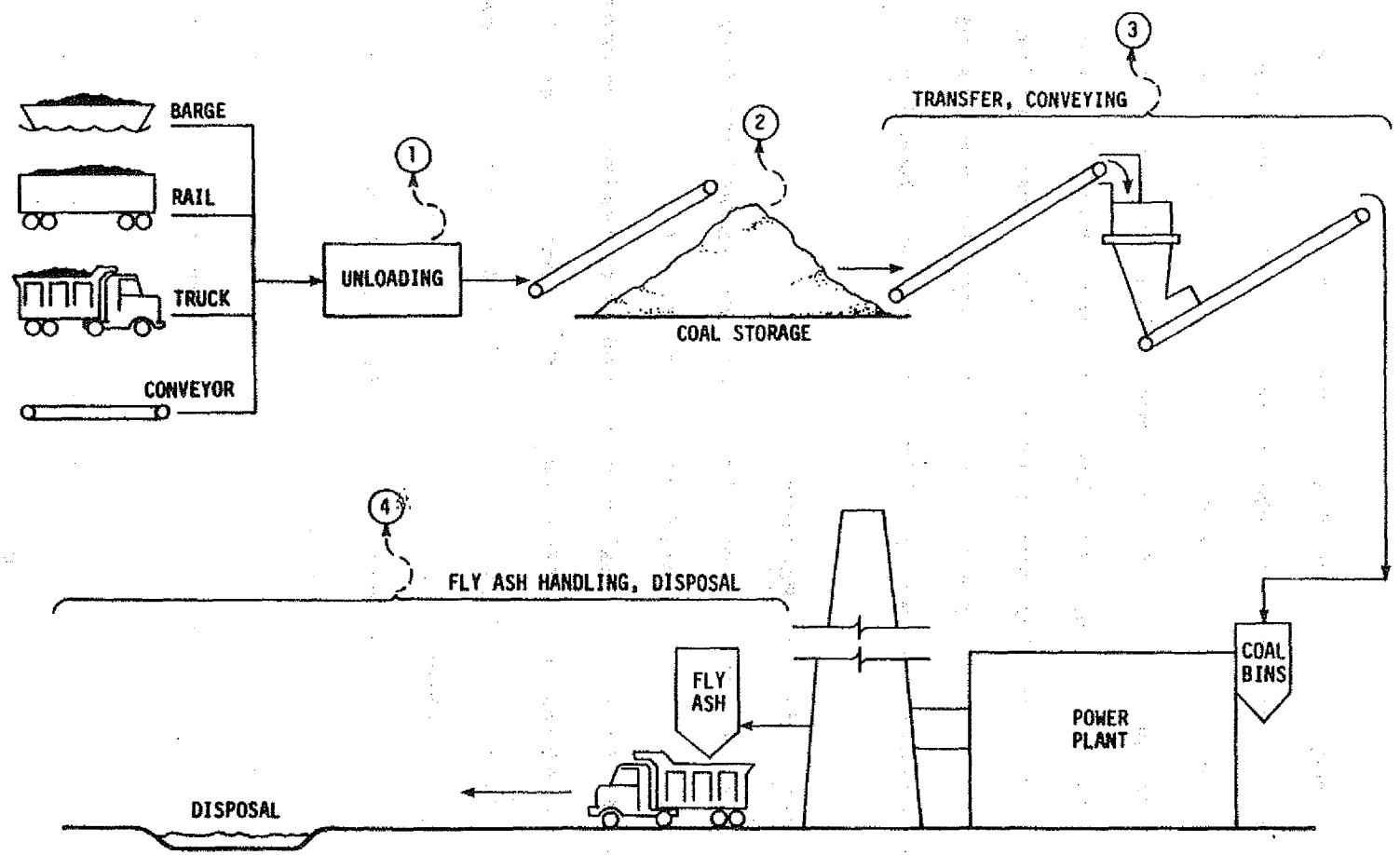

Figure 2.4-1. Simplified process flow diagram of coal-fired power plants and associated fugitive particulate emission sources.

A typical power plant has a generating capacity of about 500 MW, equivalent to consumption of roughly 230 tons of bituminous coal per hour.

Fugitive dust may be emitted from several sources in the coal-fired power plant cycle. At the mine, potential sources include overburden removal, coal extraction, stockpiles, conveying, loading and hauling. At the power plant site, possible sources include coal unloading, stockpiling, coal handling and transfer, and dry ash handling and disposal. Coal preparation plants at either the mine or power plant site can be sources of fugitive emission generation at crushing, sizing and handling operations.

2.4.2 Fugitive Dust Emission Factors

The estimated emission factors for fugitive emissions from coal-fired power plants are summarized in Table 2.4-1.

The emission factors for coal mining and processing sources were excluded since these are addressed in Sections 2.1.4 and 2.19.

The emission factors for rail car, truck and conveyor unloading are of unspecified origin; therefore, the reliability should be considered as very poor. The emission factor for barge unloading is based upon limited testing and field observations. Its reliability should be considered as fair. The coal storage and the transfer and conveying emission factors are discussed in Section 2.2.1.

The emission factor for fly ash handling and disposal is described by the source as an engineering estimate without

TABLE 2.4-1. FUGITIVE DUST EMISSION FACTORS FOR COAL-FIRED POWER PLANTS

Source	Emission factor	Reliability rating	Reference
1 Coal delivery			
Railcar unloading	0.4 lb/ton unloaded	E	1
Barge delivery	0.046 lb/ton unloaded	C	2
Truck unloading	0.4 lb/ton unloaded	E	1
Conveyors	0.04 to 1.0 lb/ton unloaded	E	1,2
2 Coal storage			
Loading onto pile	0.08 lb/ton coal loaded	D	3
Vehicular traffic	0.16 lb/ton coal stored	D	3
Loading out	0.10 lb/ton coal loaded out	D	3
Wind erosion	0.09 lb/ton coal stored	D	3
3 Transfer and conveying	0.04 to 1.0 lb/ton coal handled	E	1,2,4
4 Fly ash handling and disposal	20 to 100 lb/ton ash handled	E	5

details as to the derivation; the reliability should be considered as very poor.

2.4.2 Particle Characterization

No data were located on particle size distributions for fugitive emissions from coal-fired power plants.

The concentration limit at which coal dust may cause detrimental health effects is 2 mg/m^3 if the respirable dust fraction contains less than 5 percent quartz.[6] No data were located on the toxicity of fly ash. It would be expected to contain a higher percentage of quartz than coal but would not necessarily be more toxic (at 10% quartz the Threshold Limit Value is 0.83 mg/m^3).[7] Both the above concentrations are based on the respirable dust fraction only-not the total dust fraction (respirable and non-respirable). More data are required on the respirable quartz fraction before conclusions could be made regarding toxicity.

2.4.4 Control Methods

Coal unloading operations may be controlled by complete enclosure, with or without venting to a fabric filter, or by wet dust suppression using water and a chemical wetting agent.

The coal storage pile wind erosion emissions can be controlled by periodic application of either a water solution containing a chemical wetting agent or water alone, or by enclosure of the pile. Loading-in activities can be controlled by application of a wetting agent or use of mechanical aids such as a telescoping

chute, special stacker or stone ladder. Load-out activities can be controlled by use of an underpile conveyor, water or chemical sprays, or a stacker/reclaimer. The coal transfer, conveying, crushing and screening operations can be controlled by use of enclosed conveyors, water or chemical sprays, or enclosures vented to fabric filters.

Fly ash handling and disposal operations present no problems if the ash is wet. However, handling of dry fly ash generally requires control. Handling of the fly ash can be controlled by application of a wetting agent, covering the ash content of trucks during hauling, and minimizing free fall of the ash during loading. At the disposal site, emissions from dumping operations can be controlled by wet suppression, enclosure of the dump area, and minimizing the free fall distance of the ash. Emissions from wind erosion at the disposal site may be controlled by covering with dirt or stable material, revegetation or chemical stabilization.

Other potential fugitive dust sources at power plants are the haul roads. These are addressed in Section 2.1.

Table 2.4-2 summarizes the available control technologies, their effectiveness, estimated costs, and RACM selections.

2.4.5 Recommended Reasonably Available Control Measures (RACM)

The RACM selections for power plant fugitive sources are presented in Table 2.4-2. As indicated, the recommended control for unloading (for all types of coal delivery), stockpiling, crushing, and transfer and conveying operations of the coal is a wet dust suppression system utilizing a chemical wetting agent. This system give good control efficiency (estimated 80 to 99%)

TABLE 2.4-2. A SUMMARY OF THE CONTROL ALTERNATIVES, EFFICIENCIES AND COSTS, AND THE RACM SELECTIONS FOR FUGITIVE DUST EMISSIONS FROM SOURCES AT COAL-FIRED POWER PLANTS (500 MW)

Fugitive dust sources	Control alternatives	Control efficiency,%	Control costs, Jan.1980, $ Capital	Control costs, Jan.1980, $ Annualized	Cost benefit, $/lb	RACM selection
(1) Coal delivery (Railcar)	Enclosure	70[a]	60,000[b]	12,000[c]	0.03	Wet suppression (chemical), for railcar and other delivery methods
	Enclosure, vent to fabric filter	99[d]	120,000[d]	42,000[e]	0.07	
	Wet suppression (chemical)	80[d]	104,000[f]	38,000[g]	0.03	
(2) Coal storage						
Loading onto piles	Telescopic chutes	75[h]	9,000[h]	2,000[c]	0.02	Wet suppression (chemical)
	Wind guards	50[h]	37,000[h]	8,000[c]	0.13	
	Wet suppression (chemical)	80-90[d]	i	i	0.03	
Loading out	Bucket wheel reclaimer	80[h]	4,500,000[h]	900,000[c]	7.45	Wet suppression (chemical)
	Underpile conveyor	80[j]	6,300,000[k]	1,260,000[c]	10.43	
	Wet suppression (chemical)	95[h]	i	i	0.03	
Wind erosion	Enclosures	100[h]	8,400,000[l]	1,680,000[c]	12.35	Wet suppression (chemical)
	Wet suppression (chemical)	99[h]	14,000[h]	10,000[h]	0.07	
(3) Transfer and conveying	Enclosures	70[a]	69,000[a]	14,000[c]	0.03	Wet suppression (chemical)
	Enclosures, vent to fabric filter	99[a]	196,000[a]	86,000[c]	0.11	
	Wet suppression (chemical)	70-95[a]	i	i	0.03	

Fugitive dust sources	Control alternatives	Control efficiency,%	Control costs, Jan.1980, $ Capital	Annualized	Cost benefit, $/lb	RACM selection
(4) Fly ash handling and disposal	Wet suppression	50 to 100[m]	n	n	NA	Wet suppression, covering of haul trucks, covering of disposal area with dirt, minimize free fall distances
	Cover haul trucks	No estimate[m]	n	n	NA	
	Minimize free fall distances	No estimate[m]	n	n	NA	
	Enclosure of dump areas	No estimate[m]	n	n	NA	
	Revegetation of disposal area	25 to 100[m]	n	n	NA	
	Covering of disposal area with dirt	100[m]	n	$650/acre[o]	NA	
Haul roads	Watering	50[p]	q	q	NA	Oiling or paving
	Wet suppression	50[p]	q	q	NA	
	Oiling	85[p]	q	q	NA	
	Paving	85[p]	q	q	NA	

NA = Not available

[a] Reference 8.

[b] Reference 9. Based on 10 Ga steel enclosure of car dump.

[c] Includes capital charges and maintenance at 20% of capital.

[d] Reference 10.

[e] Reference 11. Based on 21,000 scfm, A/C of 6.5:1, 8000 h/yr operation.

[f] Reference 12. Based on 1000 tons/h capacity. Includes spray application at unloading, transfer points, stockpile load-in, stockpile load-out, and crusher inlet and outlet (Sources 1, 2, and 3).

[g] Reference 13. Based on 1,514,000 tons of coal per year.

[h] Reference 14.

[i] Costs included above, see footnote f.

[j] Reference 15.

[k] Reference 14. Based on 150,000 tons stored.

[l] Reference 16. Based on 150,000 tons stored.

[m] Reference 17.

[n] No data available.

[o] Reference 18.

[p] Reference 9.

[q] See Section 2.1.

and should reduce visible emissions to almost zero opacity (based on the effectiveness achieved at similar stone processing operations). A system of enclosures with venting to fabric filters for the sources mentioned above would be more effective (≈99%) but would be much more costly to install. Comparative capital costs on a 500 MW plant are $118,000 for the wet suppression system versus $316,000 for the fabric filter system. Annualized costs are $48,000 for the wet suppression system versus $128,000 for the fabric filter system. A diagram of a wet suppression system as applied on the coal handling operations at a power plant is given in Figure 2.4-2.

The selected RACM for control of fly ash handling and disposal is the use of wet suppression, covering of haul trucks to and from disposal site and covering of the disposed fly ash with dirt. These measures should effectively reduce fugitive emissions at a fairly low cost. At most large power plants, however, these measures will be unnecessary since the fly ash is in a wetted state and is stored under water in ash ponds.

The control of haul road fugitive emissions can be either permanent paving with adequate housekeeping or oiling. For roadways in relatively constant use, a paving/cleaning program can best alleviate emissions. However the cost may be prohibitive. A program of oiling can provide good control at a reasonable cost and is recommended for little used roads or roads where a paving program would be impractical due to high costs.

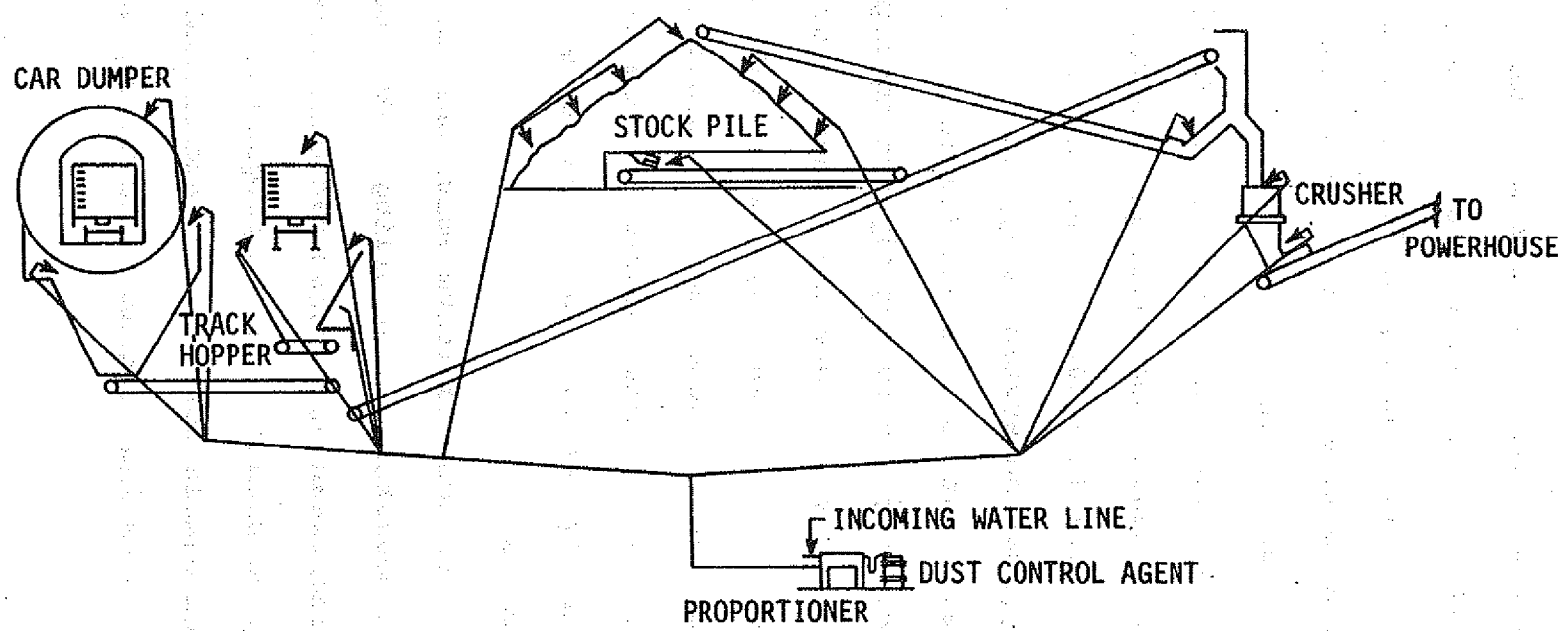

Figure 2.4-2. Wet dust suppression system applied on a coal-fired power plant.

REFERENCES FOR SECTION 2.4

1. Environmental Assessment of Coal Transportation. PEDCo-Environmental Specialists, Inc. Prepared for U.S. Environmental Protection Agency. Contract No. 68-02-1321, Task 40, October 15, 1976.

2. R. Bohn, T. Cuscino Jr. and C. Cowherd Jr. Fugitive Emissions from Integrated Iron and Steel Plants: Midwest Research Institute, Kansas City, Missouri: March 1978. EPA-600/2-78-050. p. 3-42.

3. Open Dust Sources Around Iron and Steel Plants, Draft. Midwest Research Institute. Prepared for the U.S. Environmental Protection Agency, Industrial Environmental Research Laboratory under Contract No. 68-02-2120. Research Triangle Park, North Carolina. November 2, 1976.

4. Technical Guidance for Control of Industrial Process Fugitive Particulate Emissions. PEDCo Environmental, Inc., Cincinnati, Ohio: Prepared for EPA, Research Triangle Park, North Carolina. March 1977. p. 2-7.

5. Ibid. p. 2-44.

6. Threshold Limit Values for Chemical Substances and Physical Agents in the Workroom Environment with Intended Changes for 1976. American Conference of Governmental Industrial Hygienists. Cincinnati, Ohio. 1976. p. 33.

7. Ibid. p. 32.

8. Op. cit. Reference 2. p. 6-2.

9. PEDCo Environmental, Inc. Technical Guidance for Control of Industrial Process Fugitive Particulate Emissions. EPA-450/3-77-010, March 1977. p. 2-38.

10. Op. cit. Reference 2. p. 6-3.

11. Industrial Gas Cleaning Institute, Inc. Nonmetallic Minerals Industries Control Equipment Costs. Prepared for U.S. Environmental Protection Agency, Research Triangle Park, North Carolina. Contract No. 68-02-1473, Task No. 19, February 1977. p. 3-5.

12. Ibid. p. 4-9.

13. Ibid. p. 4-12.

14. Op. cit. Reference 2. p. 6-6.

15. Op. cit. Reference 9. p. 3-39.

16. Op. cit. Reference 2. p. 6-7.

17. Op. cit. Reference 9. p. 2-47

18. Ibid. p. 2-48.

APPENDIX FOR SECTION 2.4

(1) Coal delivery (railcar)

Emissions = (0.4 lb/ton)(1,514,000) = 605,600 lbs/yr

Enclosure

See Coke 1

$$C/B = \frac{\$12,000/yr}{.7\ (605,600)} = \$0.03/lb$$

Enclosure, vent to fabric filter

See Coke (1)

$$C/B = \frac{\$42,000/yr}{.99\ (605,600)} = \$0.07/lb$$

Wet suppression (chemical)

Coal throughput = 288 tph
@ 60% capacity factor = 1,514,000 tpy
Assume maximum capacity on coal handling of 1,000 tph

Capital cost = $\$80,000 \frac{(249.6)}{(192.1)}$ = $104,000 p. 4-9, NMI

Annual cost = $\$29,000 \frac{(249.6)}{(192.1)}$ = $38,000 p. 4-12, NMI

$$C/B = \frac{\$38,000/yr}{.8(605,600) + .85(121,000) + .95(151,000) + .99(136,000) + .83(787,000)} = \$0.03/lb$$

(2) Coal storage

Loading onto piles
Emissions = .08 lb/ton (1,514,000 tpy) = 121,000 lbs/yr

Telescopic chutes

See Coke (2)

$$C/B = \frac{\$2,000/yr}{.75\ (121,000)} = \$0.02/lb$$

Wind guards

See Coke (2)

$$C/B = \frac{\$8,000/yr}{.5\ (121,000)} = \$0.13/lb$$

Wet suppression (chemical)

See (1)

C/B = $0.03/lb

Loading out
Emissions = 0.10 lb/ton (1,514,000) = 151,000 lbs/yr

Bucket wheel reclaimer

See Coke (2)

$$C/B = \frac{\$900,000/yr}{.8\ (151,000)} = \$7.45/lb$$

Underpile conveyor

See Coke (2)

$$C/B = \frac{\$1,260,000/yr}{.8\ (151,000)} = \$10.43/lb$$

Wet suppression (chemical)

See (1)

C/B = $0.03/lb

Wind erosion

Emissions = .09 lb/ton (1,514,000 tpy) = 136,000 lbs/yr

Enclosures

See Coke (2)

$$C/B = \frac{\$1,680,000/yr}{1.0\ (136,000)} = \$12.35/lb$$

Wet suppression (chemical)

See Coke (2)

$$C/B = \frac{\$10,000/yr}{.99\ (136,000)} = \$0.07/lb$$

(3) Transfer and conveying

Emissions = 0.52 lb/ton (1,514,000 tpy) = 787,000 lbs/yr

Enclosures

See Coke (2)

$$C/B = \frac{\$14,000/yr}{.7\ (787,000)} = \$0.03/lb$$

Enclosures, vent to fabric filter

See Coke (3)

$$C/B = \frac{\$86,000/yr}{.99\ (787,000)} = \$0.11/lb$$

Wet suppression (chemical)

See (1)

C/B = $0.03/lb

(4) Fly ash handling and disposal

No costs available

2.5 GRAIN TERMINALS

2.5.1 Process Description

Grain elevators are used for storage, treatment and transfer of agricultural grain crops as they are moved from the farm to the market. The harvested grain is usually trucked to local country elevators, then transferred by truck, rail car or barge to larger terminal elevators, which have storage capacities of 2 million bushels or more. The grains handled include corn, wheat, rye, oats, barley, flax seed, grain sorghum and soybeans.

At the terminal elevator the grain is conditioned (dried, screened and cleaned) and stored before shipment to a grain processor, feed manufacturer or other user. Some terminal elevators simply receive grain from nearby country elevators and ship it to other terminal elevators. These facilities, sometimes called "subterminal" elevators, may handle up to 20 times their storage capacity each year. Most terminal elevators, however, handle annual quantities that are only a few times their storage capacity. Figures 2.5-1 and 2.5-2 are flow diagrams of typical grain elevator operations.

The initial operation at a terminal elevator is the unloading of the truck (see Figure 2.5-3), box car (see Figure 2.5-4), hopper car or barge that delivers the grain. The grain is discharged into a receiving hopper, usually located below grade. The grain is then conveyed by a weather-protected belt conveyor to the foot of one of several bucket elevators. The bucket elevators, together with distributors and processing equipment, are housed in the major structure of the facility, called the "headhouse".

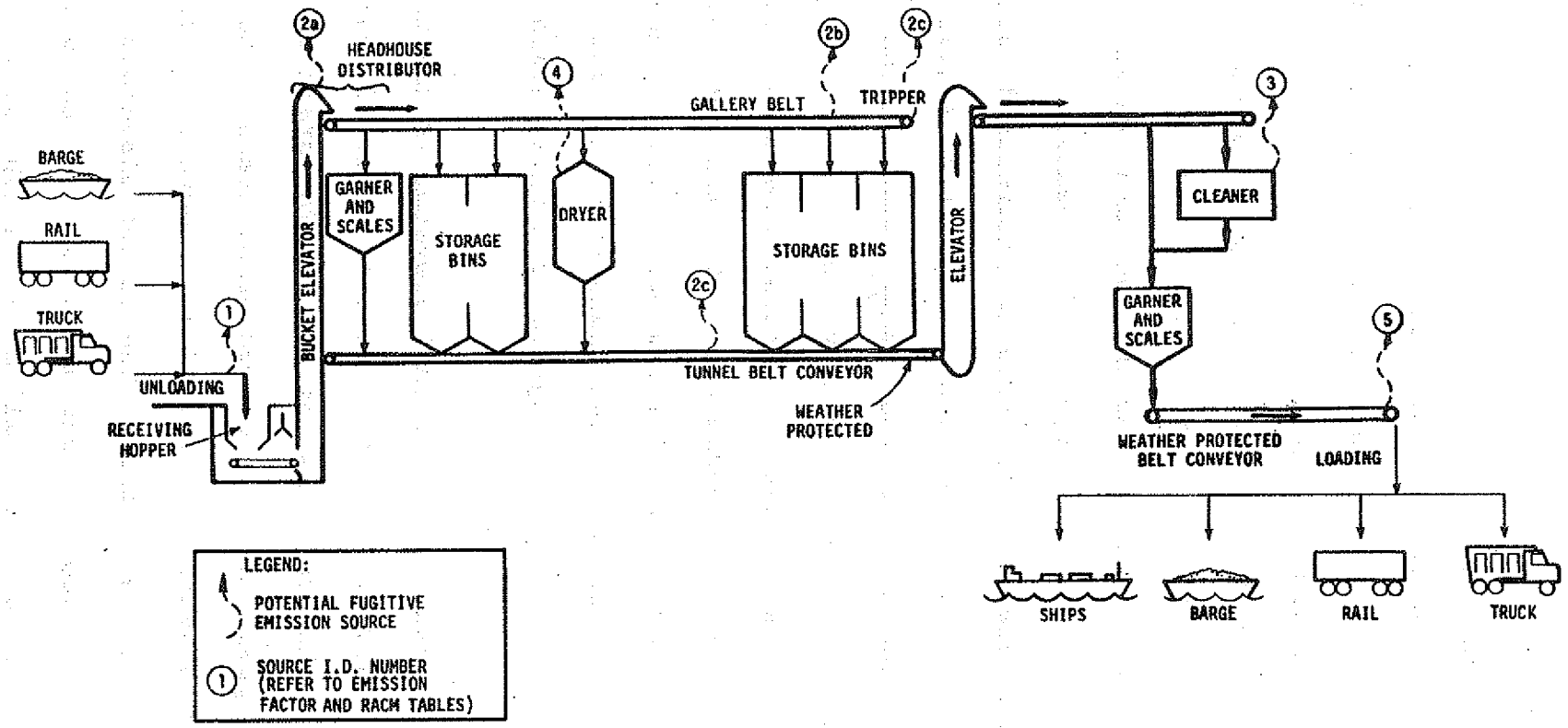

Figure 2.5-1. Simplified process flow diagram for grain terminals and associated fugitive particulate emission sources.

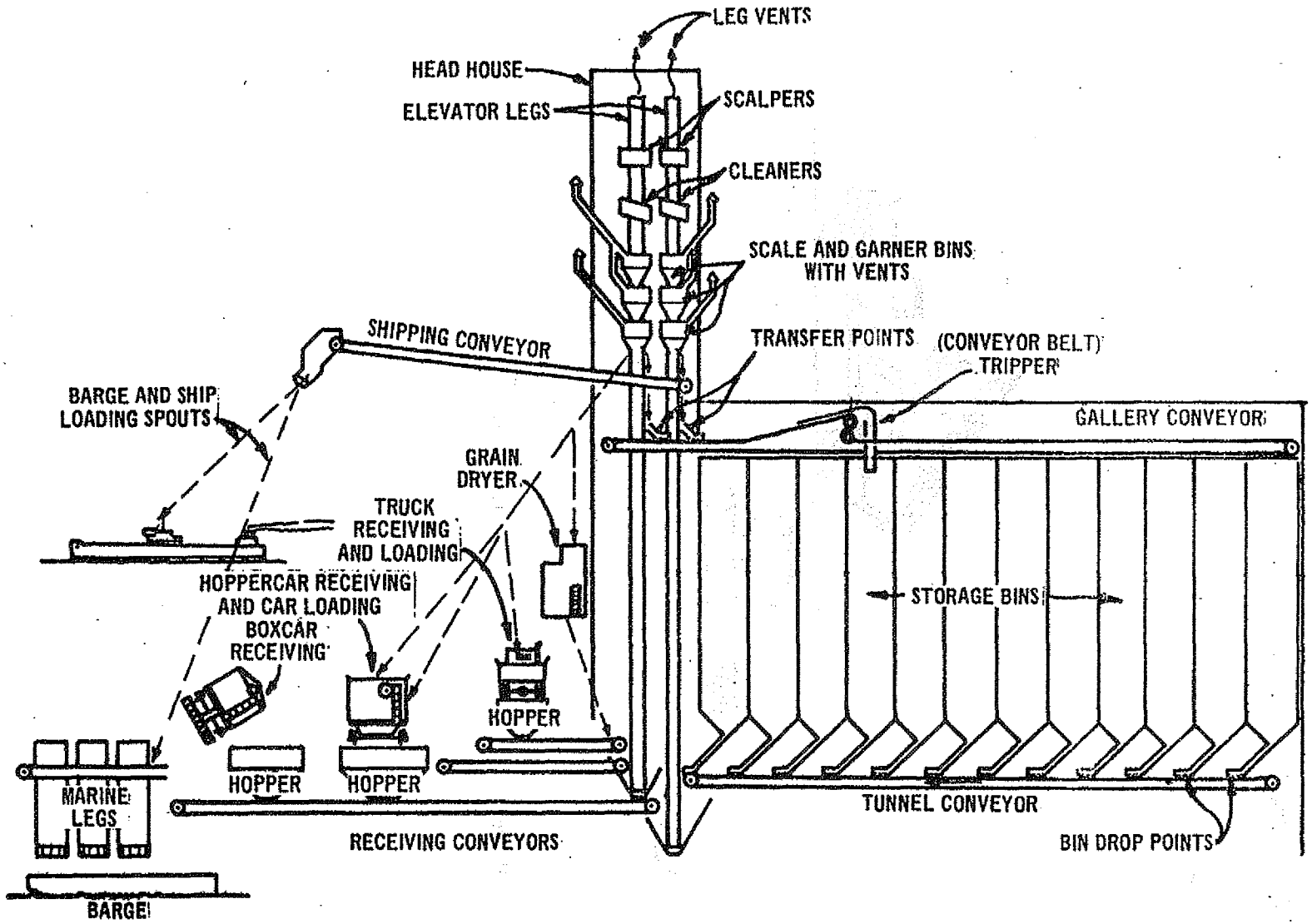

Figure 2.5-2. Grain terminal elevator.[26]

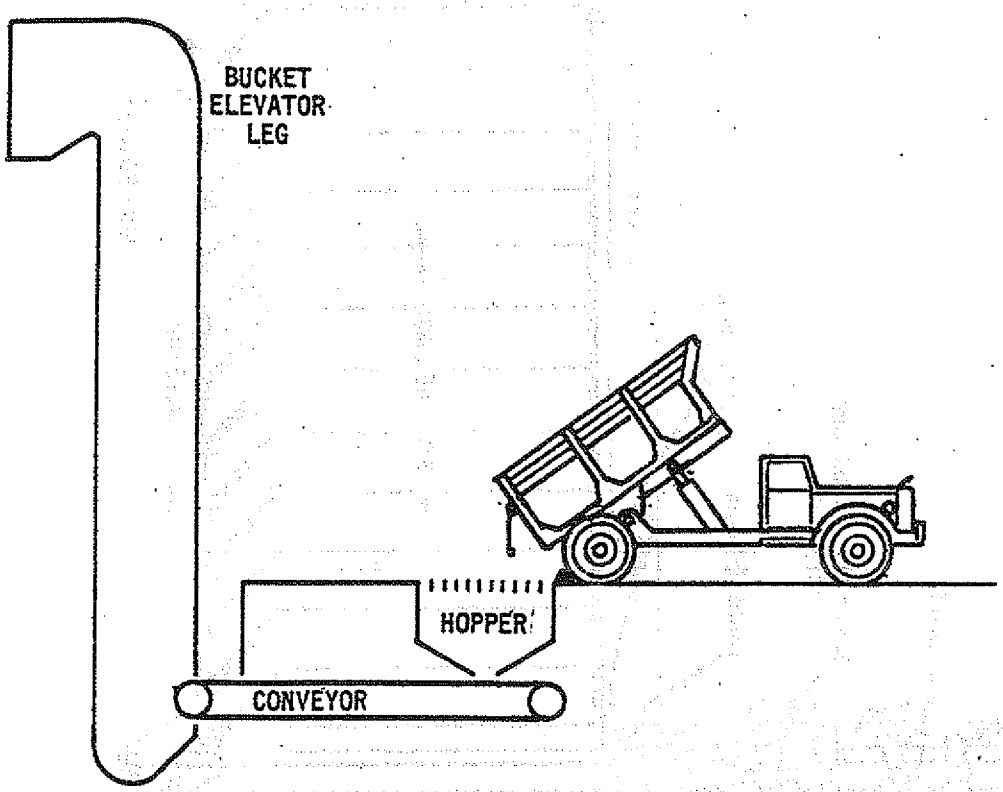

Figure 2.5-3. Truck unloading.[27]

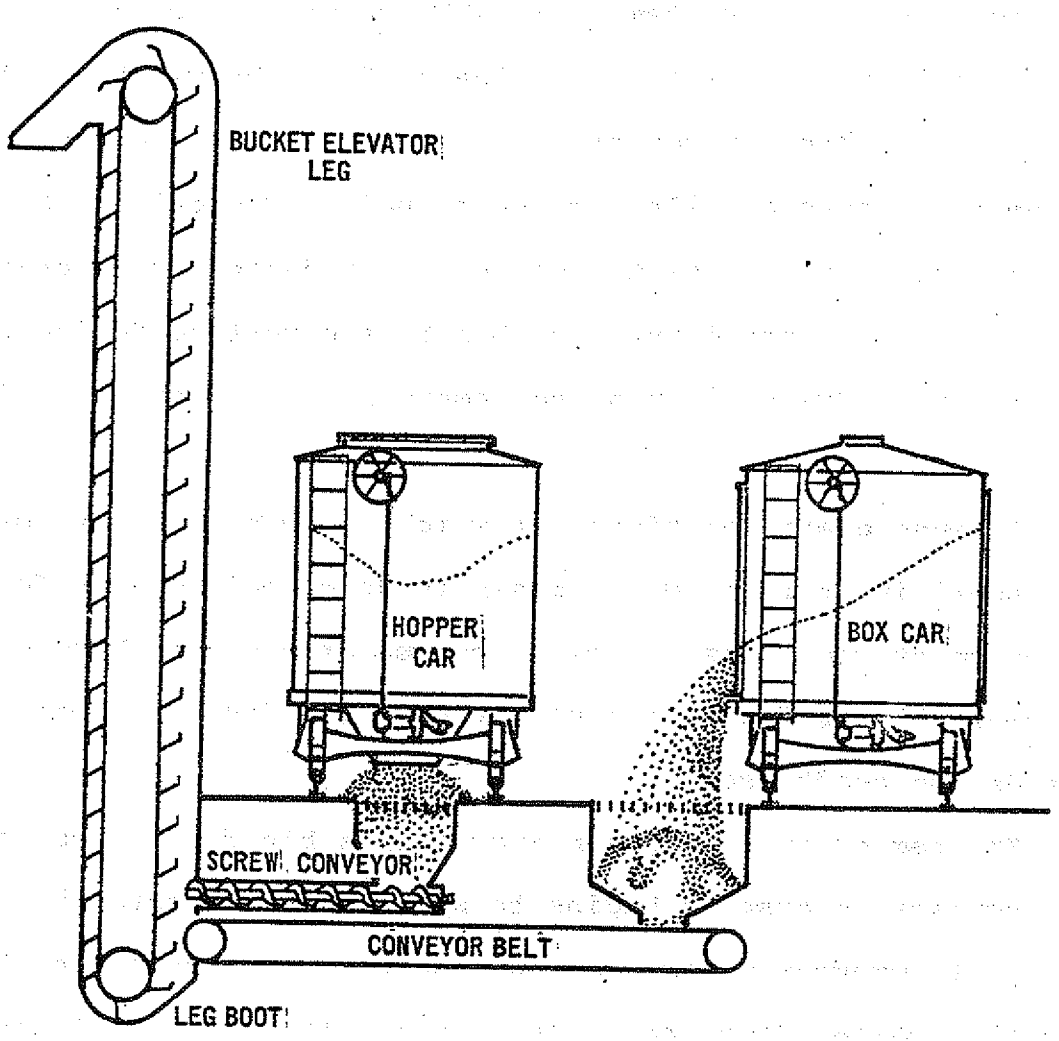

Figure 2.5-4. Railcar unloading.[28]

The elevator carries the grain to the top level of the headhouse (called the "gallery"), where it is discharged into a distributor, usually a system of movable spouts, which directs it into a collecting bin (called a "garner") to be weighed. Alternatively, the distributor can route the grain into cleaning equipment or onto a gallery conveyor belt. The gallery belt carries the grain across the gallery to a designated storage bin, where it is discharged into the bin by a diverting device called a "tripper." Grain cleaning equipment is illustrated in Figure 2.5-5.

Because grain containing 14 weight percent moisture or more will spoil in storage, moist grain is dried before transfer to long-term storage bins. Rack or column dryers (see Figure 2.5-6) are generally used at grain elevators. The dryer is located outside the headhouse.

The temperature of grain stored in a bin for a long period may increase because it begins to spoil or is infested by molds or fungi. To prevent deterioration, the grain may be cooled by an operation called "turning". In turning, the grain is dropped from the storage bin onto a belt conveyor system running beneath the bins (the "tunnel" belt conveyor), then conveyed to a bucket elevator, lifted to the top, and discharged via a gallery belt conveyor into an empty bin. The tunnel belt conveyor system is usually uncovered.

When dirty grain is received at the elevator, cleaners are used to remove foreign materials such as dust, sticks, stones,

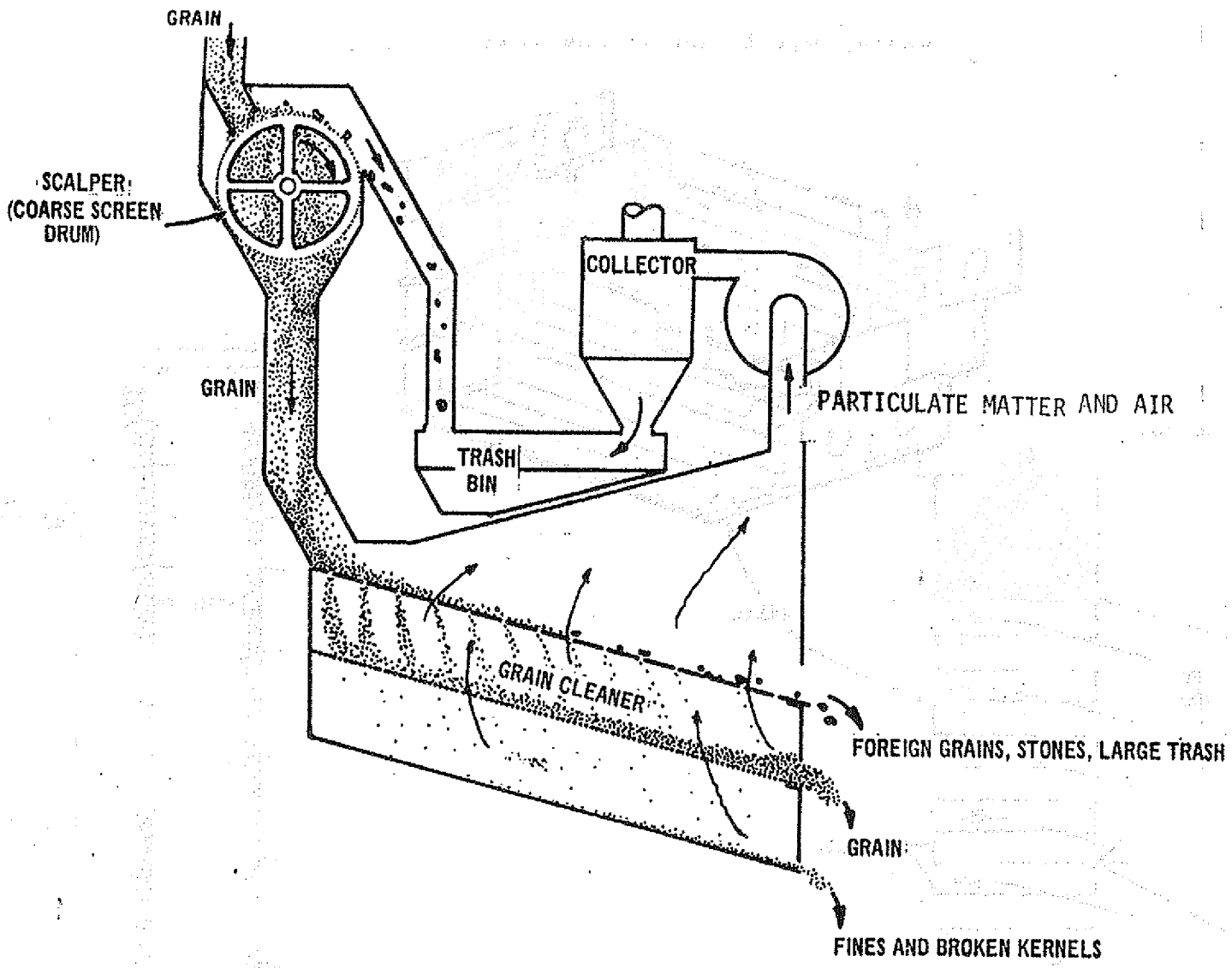

Figure 2.5-5. Grain cleaning equipment.[29]

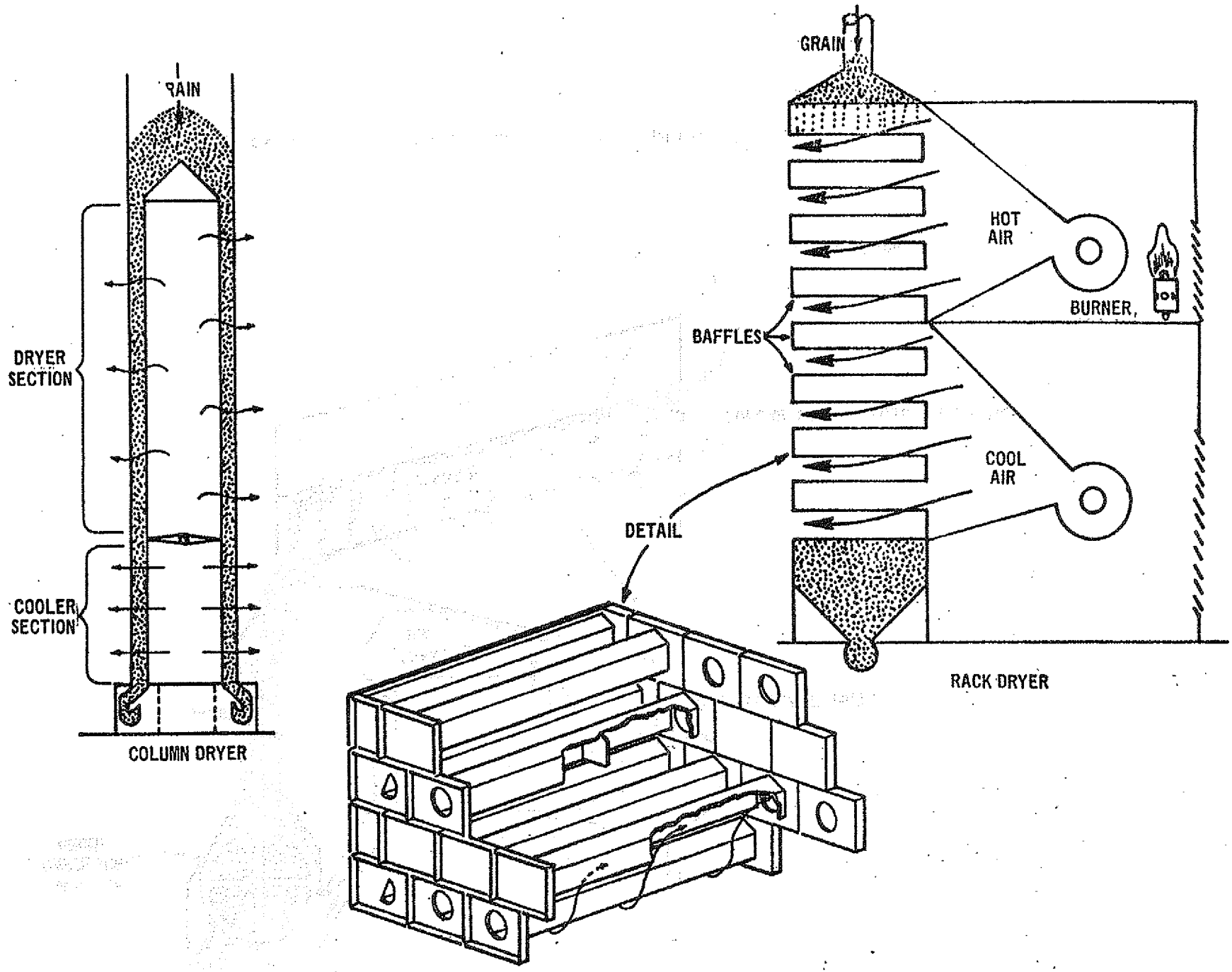

Figure 2.5-6. Rack and column grain dryers.[30]

stalks, stems and weed seeds. Often the grain is first transferred to a temporary storage bin, dropped onto a tunnel conveyor, and lifted by a bucket elevator to the grain cleaner and garner. Equipment used to clean grain includes simple screening devices and aspiration (suction) type cleaners. The screening devices remove large sticks, tools and other trash; and the aspirators remove chaff and similar lightweight impurities. The cleaned grain is elevated to the gallery conveyor and routed to an empty bin.

Grain to be shipped from the elevator facility is dropped from the storage bins onto the tunnel belt conveyor. The conveyor discharges to the foot of a bucket elevator, which lifts it to a distributor. From there it passes to a loadout scale. After weighing, the grain is discharged through a loading spout into rail cars, trucks, barges or ships. Figures 2.5-7 and 2.5-8 depict these loading operations.

Sources of fugitive dust at grain terminals include grain receiving, screening and cleaning, transfer and conveying, drying and shipping. These sources are indicated in Figure 2.5-1.

2.5.2 Fugitive Dust Emission Factors

Estimated emission factors for grain terminal fugitive emission sources are summarized in Table 2.5-1. The emission factors are based upon a limited number of tests on grain elevators. It was found that the emission rates can vary greatly depending upon the types of grain being handled. Field run grains such as soybeans, oats and sorghum are very dusty compared to wheat or

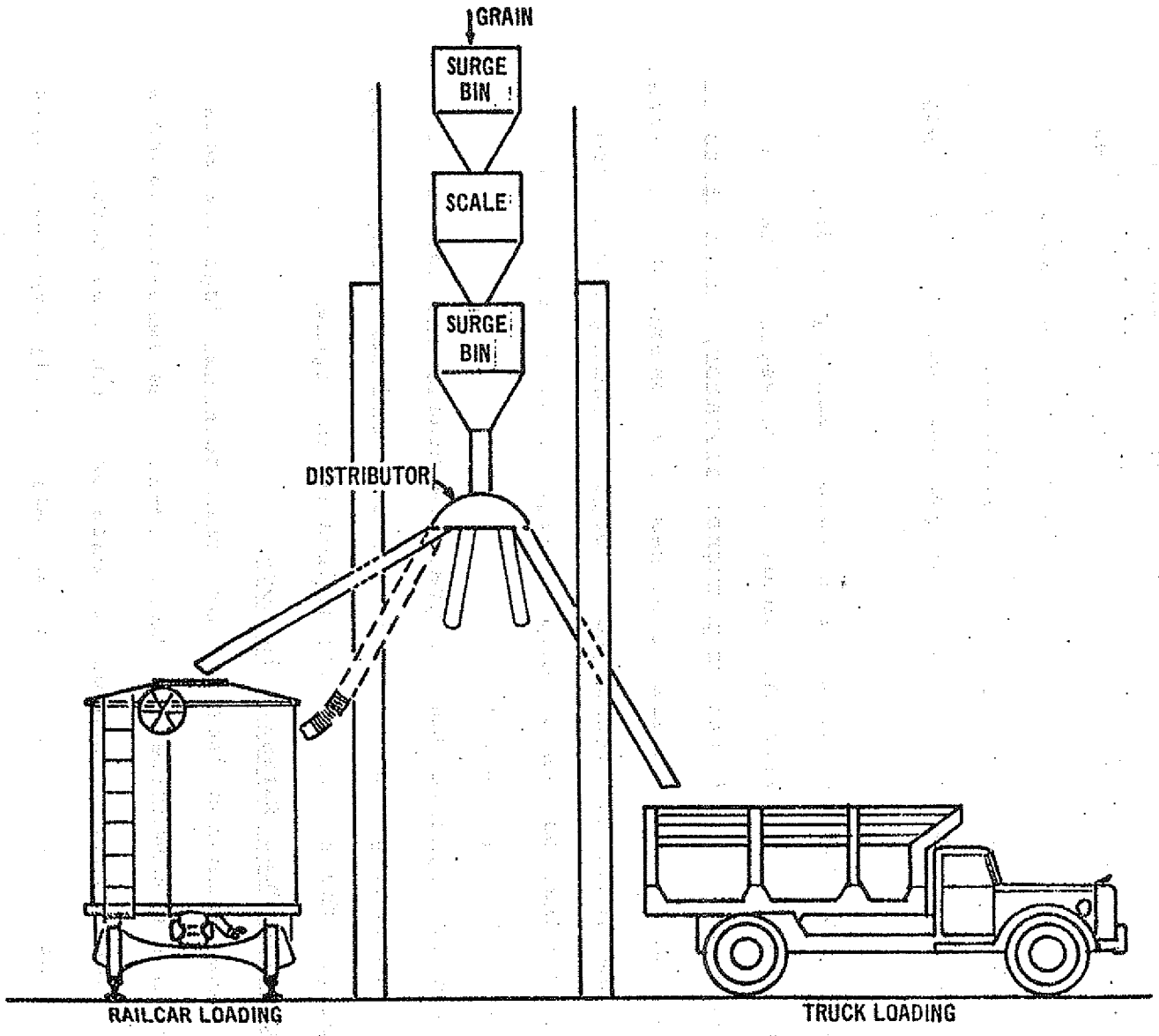

Figure 2.5-7. Railcar and truck loading.[31]

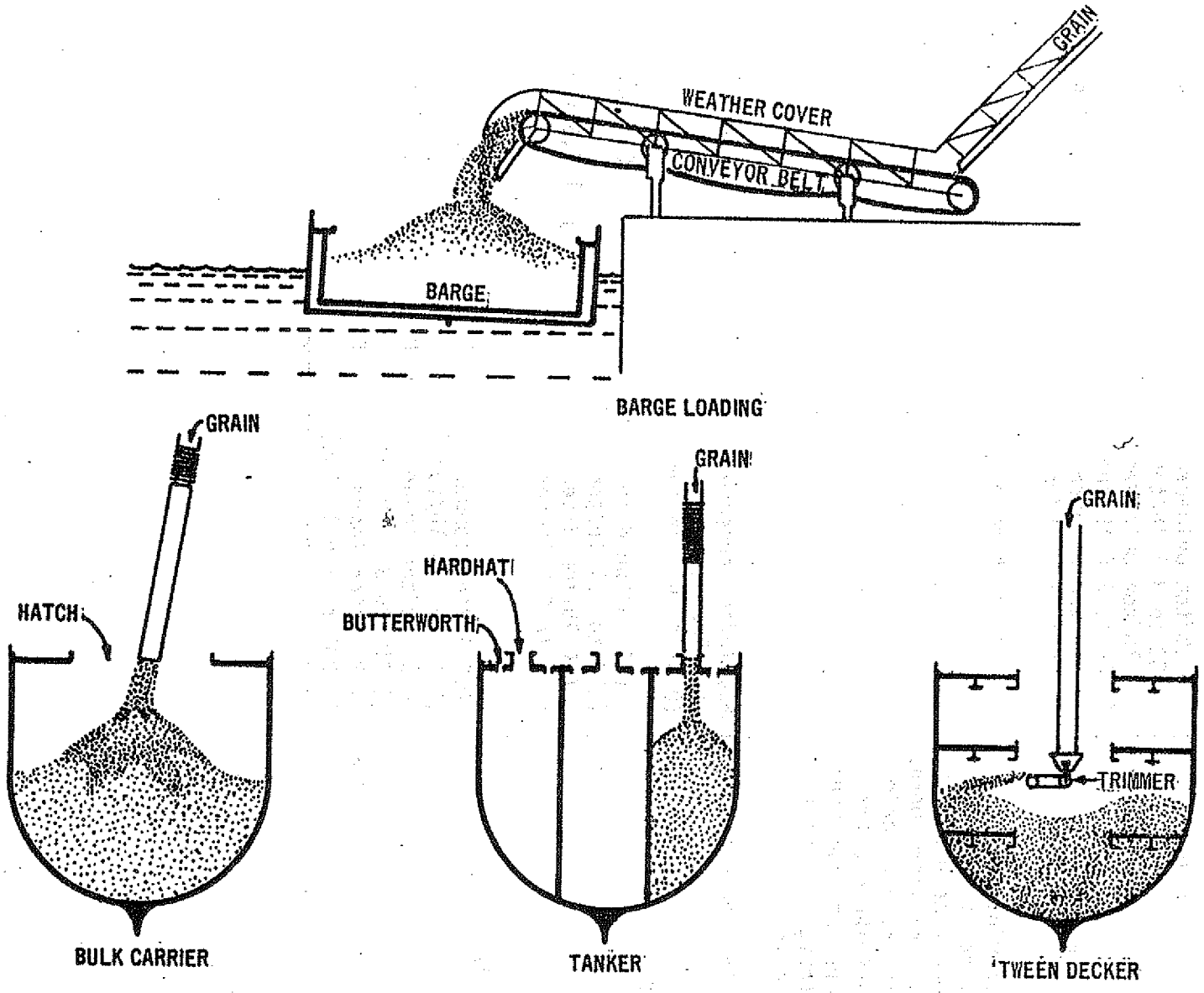

Figure 2.5-8. Barge and ship loading.[32]

TABLE 2.5-1. FUGITIVE DUST EMISSION FACTORS FOR GRAIN TERMINALS

Source	Emission factor	Reliability rating	Reference
1 Receiving			
Truck unloading	0.6 lb/ton unloaded (0.32 to 3.5 lb/ton)	D	1,2,3,4,5
Railcar unloading	1.3 lb/ton unloaded (0.04 to 3.0 lb/ton)	D	1,2,3,4,5
Barge unloading	1.7 lb/ton unloaded (0.08 to 3.5 lb/ton)	D	1,2,3,4,5
2 Transferring and conveying (total)	6.0 lb/ton handled	D	6
2a. Receiving elevator leg, elevator head, garner, and scales	a		
2b. Distributor, trippers, and spouting	a		
2c. Storage bin vents and turning	a		
3 Screening and cleaning	6.0 lb/ton screened and cleaned (0.19 to 9.2 lb/ton)	D	1,2,3,5
4 Drying:			
Column	0.5 lb/ton dried (.19 to 1.1 lb/ton)	D	1,2,3,4,5,7
Rack	4.0 lb/ton dried (1.8 to 8.0 lb/ton)	D	1,2,3,4,5,7
5 Shipping			
Truck loading	0.3 lb/ton loaded (0.14 to 3.5 lb/ton)	D	2,3,4,5
Railcar loading	0.27 lb/ton loaded (0.015 to 3.0 lb/ton)	D	1,2,3,4,5
Barge or ship loading	1.2 lb/ton loaded (0.002 to 3.5 lb/ton)	D	1,2,3,4,5

[a] Included in total estimate.

corn. However, the data are insufficient to quantify the differences. Therefore, the emission factors cannot be considered accurate for any specific operation and have a poor reliability.

2.5.3 Particle Characterization

The fugitive dust from grain elevators contains a small amount of spores of smuts and molds, insect parts, weed seeds, various pollens and siliceous dust from vegetation and soil in the vicinity where the grain was grown. But most of the dust is bristles and other particles from the outer coats of grain kernels produced by the abrasion of the individual kernels of grain.

Grain dust has a specific gravity normally in the range 0.8 to 1.5 as compared to various other industrial dusts which usually have specific gravities between 2.0 and 2.5.[2] Grain dust is mostly in the range of 10 to 100 μm in size.[1]

In Table 2.5-2 are presented the results of tests of the inlet of a cyclone which vented an elevator leg.[8] These cyclone inlet emissions can be considered an approximation of the particle size distribution of the fugitive particulate emissions from an uncontrolled elevator leg vented to atmosphere.

Monitoring in the vicinity of a terminal resulted in the measurement of suspended particulate matter at a concentration of 240 $\mu g/m^3$.[9] These particles had a size distribution of 99.5 percent less than 2 microns and 50 percent less than 0.03 microns in diameter.[9] Such particles at concentrations above 100 $\mu g/m^3$ are known to have adverse health effects on humans.[9]

TABLE 2.5-2. PARTICULATE SIZE DISTRIBUTION FOR DUST FROM AN ELEVATOR LEG CYCLONE (INLET TEST)[8]

US Sieve mesh	Size opening (μm)	Cumulative weight, percent greater than
100	149	32.7
170	88	44.7
200	74	48.7
325	44	68.0
-	20	91.0
-	10	99.1
-	5	99.9
-	1	99.9

Also, respiratory ailments could result from the insects, molds and fungi associated with grain handling. Workers inside elevators can be subjected to airborne dust concentrations of 100 to 400 mg per cubic meter. Such levels are well above the threshold where respiratory problems occur.[9]

During corn drying, "bees wings", which are the filmy outer skin of the corn kernel, are emitted along with normal grain dust. Essentially all bees wing emissions are over 50 μm in diameter, and the mass mean diameter is probably in the region of 150 μm.[2]

2.5.4 Control Methods

Effective dust control during truck unloading operations generally requires the use of undergrate aspiration and a suitable enclosure or shed over the receiving pit. The aspirated air is directed to a control device which may be either a cyclone or a fabric filter.[10] Figure 2.5-9 illustrates such a system.

The type of enclosure for the unloading affects the quantity of fugitive dust emitted. Some grain elevators use only a two-sided enclosure with a roof. The most suitable structure for fugitive emission control is a three-sided and a top enclosure or drive-through tunnel where a door is lowered each time a truck is unloaded. Ultimate control is obtained when the truck unloading is conducted in a totally enclosed shed or drive-through tunnel with two quick-closing doors. With this enclosed type control structure most windage fugitive emission losses can be prevented during truck unloading; however, the cost may be prohibitive.[11]

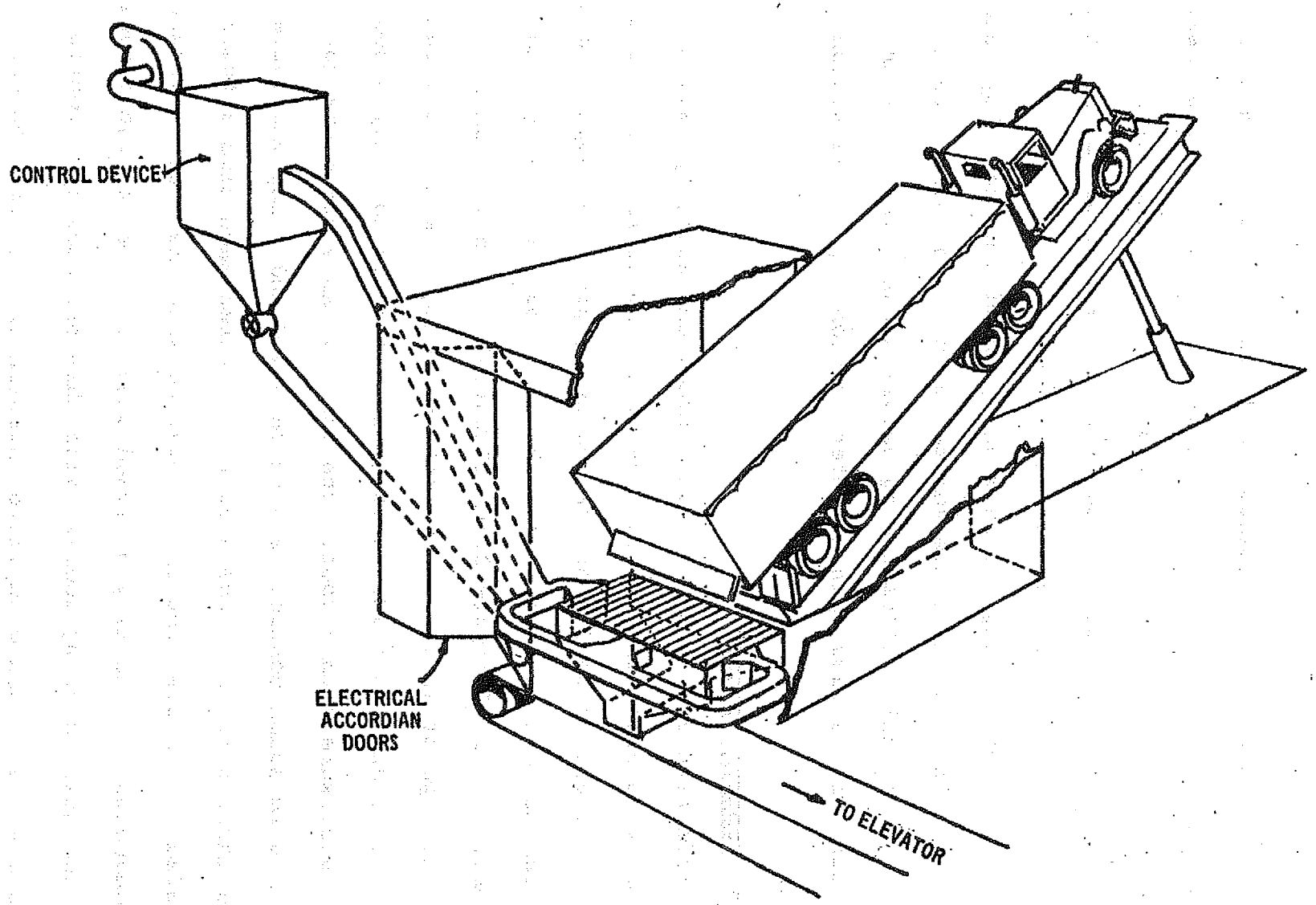

Figure 2.5-9. Truck unloading control system.[33]

Best railcar unloading emissions control requires total enclosure sheds or drive-through tunnels with quick closing doors. Control problems for hopper cars are different than those for boxcars. Two unloading control methods have been used for hopper cars. One method uses undergrate aspiration vented to a cyclone or fabric filter in a manner similar to controls for truck unloading. The second method uses a small receiving hopper to effect choke unloading. Boxcar unloading is usually carried out by "breaking" a grain door inside the car. This produces a surge of grain and dust as the grain falls into the receiving hopper. The grain remaining has to be scooped out. Each scoop of grain can result in a cloud of dust. Another common boxcar unloading technique used at terminal elevators is a mechanical boxcar dump which tilts the boxcar to dump the grain into a receiving pit. This rapid unloading method creates a large cloud of dust which may be difficult to control. The emissions from these two boxcar unloading methods may be controlled by undergrate aspiration to a fabric filter or a cyclone. However, large volumes of air are necessary to effect a 95 percent dust capture efficiency.[11] Figure 2.5-10 depicts a control system for both hopper and boxcar unloading, while Figure 2.5-11 gives a more detailed view of the boxcar unloading control system.

Barge unloading is primarily done by a retractable bucket type elevator (marine leg). This is lowered into the hold of the barge. Some generation of fugitive dust occurs in the hold as the grain is scooped out and also at the top of the marine leg where the grain is discharged onto a conveyor. Control for barge

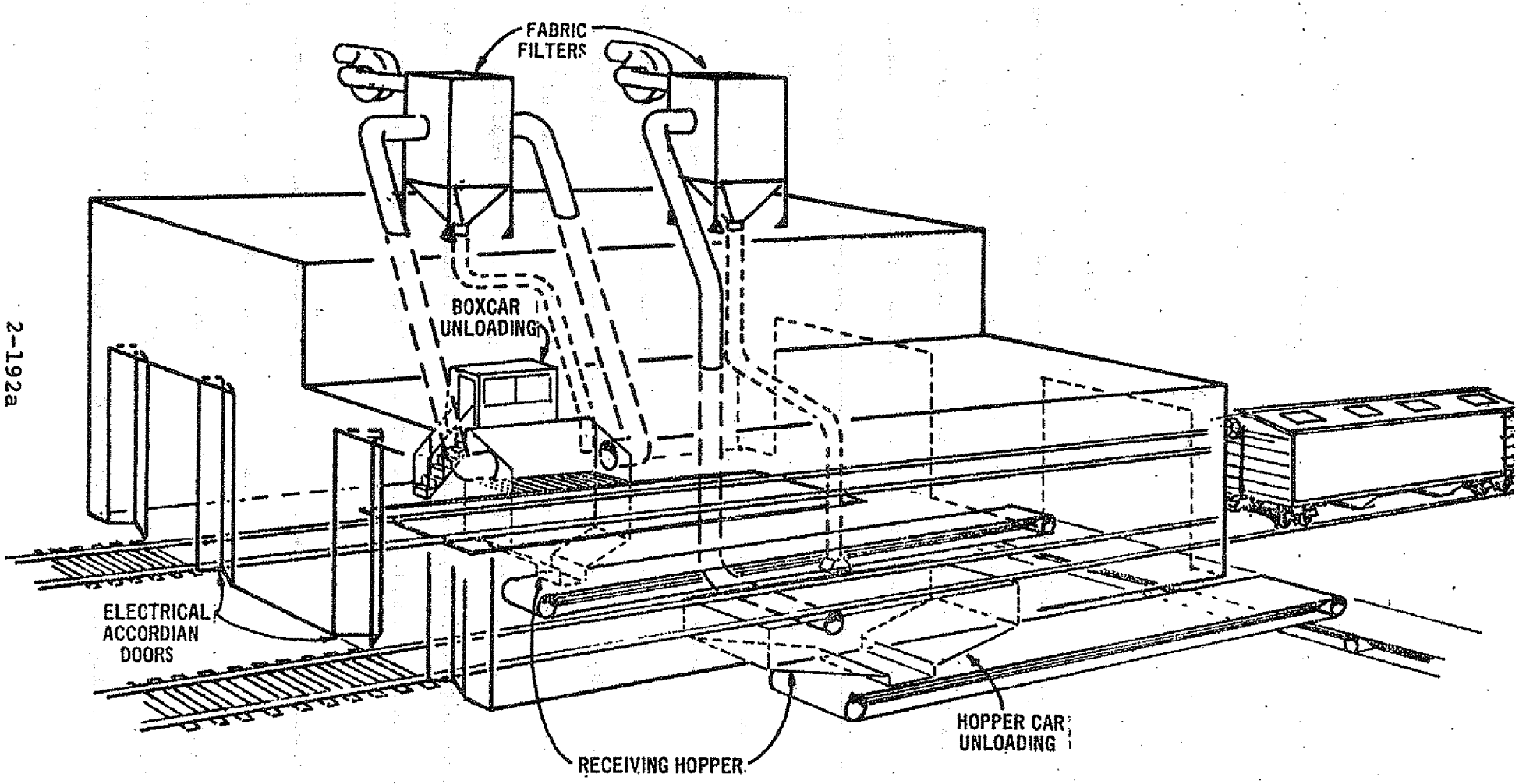

Figure 2.5-10. Railcar unloading control systems.[34]

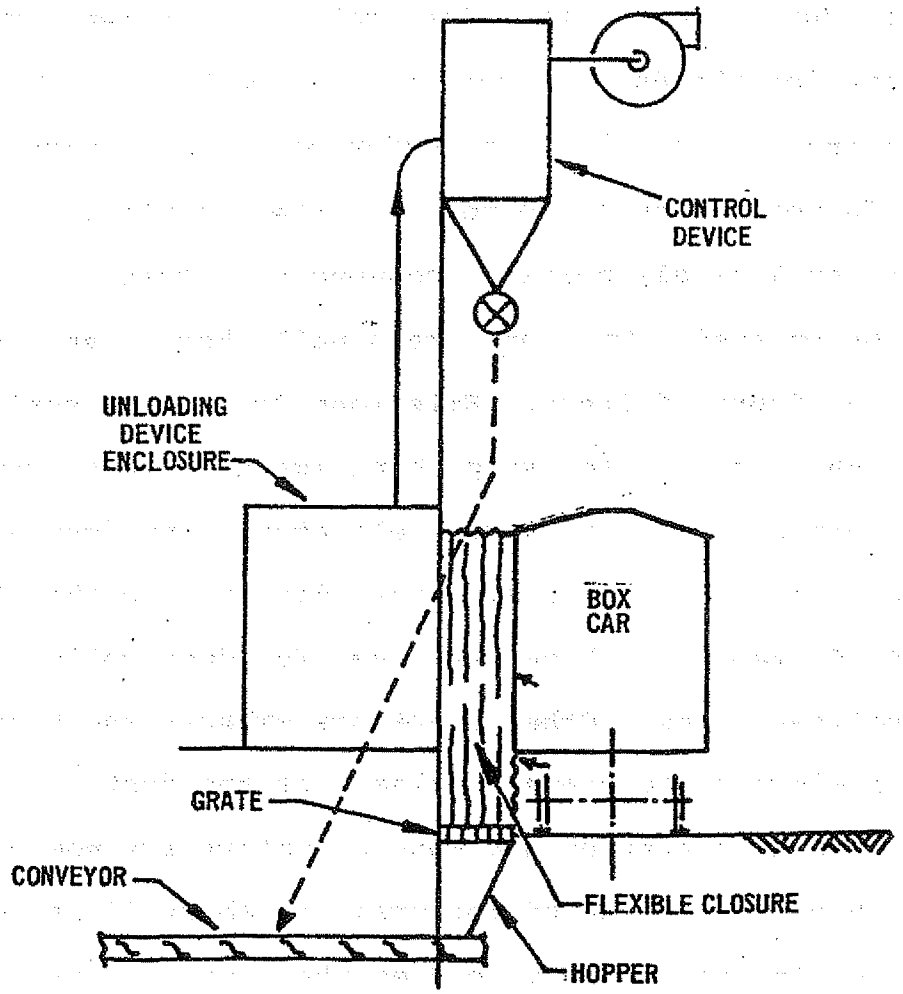

Figure 2.5-11. Boxcar unloading control system.[35]

unloading is best carried out by completely enclosing the leg and aspirating the dust through a fabric filter or cyclone.[11] Figure 2.5-12 illustrates such a system.

The control of emissions from the transferring and conveying of grain in an elevator is often carried out by ducting many individual dust sources to a common dust collector system. This is commonly done for the dust sources in the headhouse. Thus, aspiration systems serving elevator legs, transfer points, bin vents, etc., may all be ducted to one collector. In these control systems it is desirable to enclose all possible conveyors so that little particulate matter can be emitted. Trippers are usually hooded and ventilated to cyclones or fabric filters. Emissions from grain scale weighing hoppers and their associated surge bins (garners) also may be vented to a common collector. Many elevators vent dust, generated by the flow of grain into storage bins, directly to the atmosphere. Small fabric filter units have been used for dust collection in some metropolitan areas. Other elevators exhaust the bins internally in the grain elevator to prevent release of the dust.[8] Grain turning is a dusty operation and many elevators are now aerating their grain bins. Aeration of the grain is about 40 percent less dusty than turning and greatly reduces the need for transferring grain for cooling.[1] Figures 2.5-13 and 2.5-14 show how emissions are captured from elevator legs and transfer points, respectively.

Grain screening and cleaning emissions are controlled by hooding or enclosing the equipment and exhausting to a cyclone or fabric filter. Some screens with air-tight enclosures require no ventilation to control devices.[11] A control system for handling and cleaning operations is depicted in Figure 2.5-15.

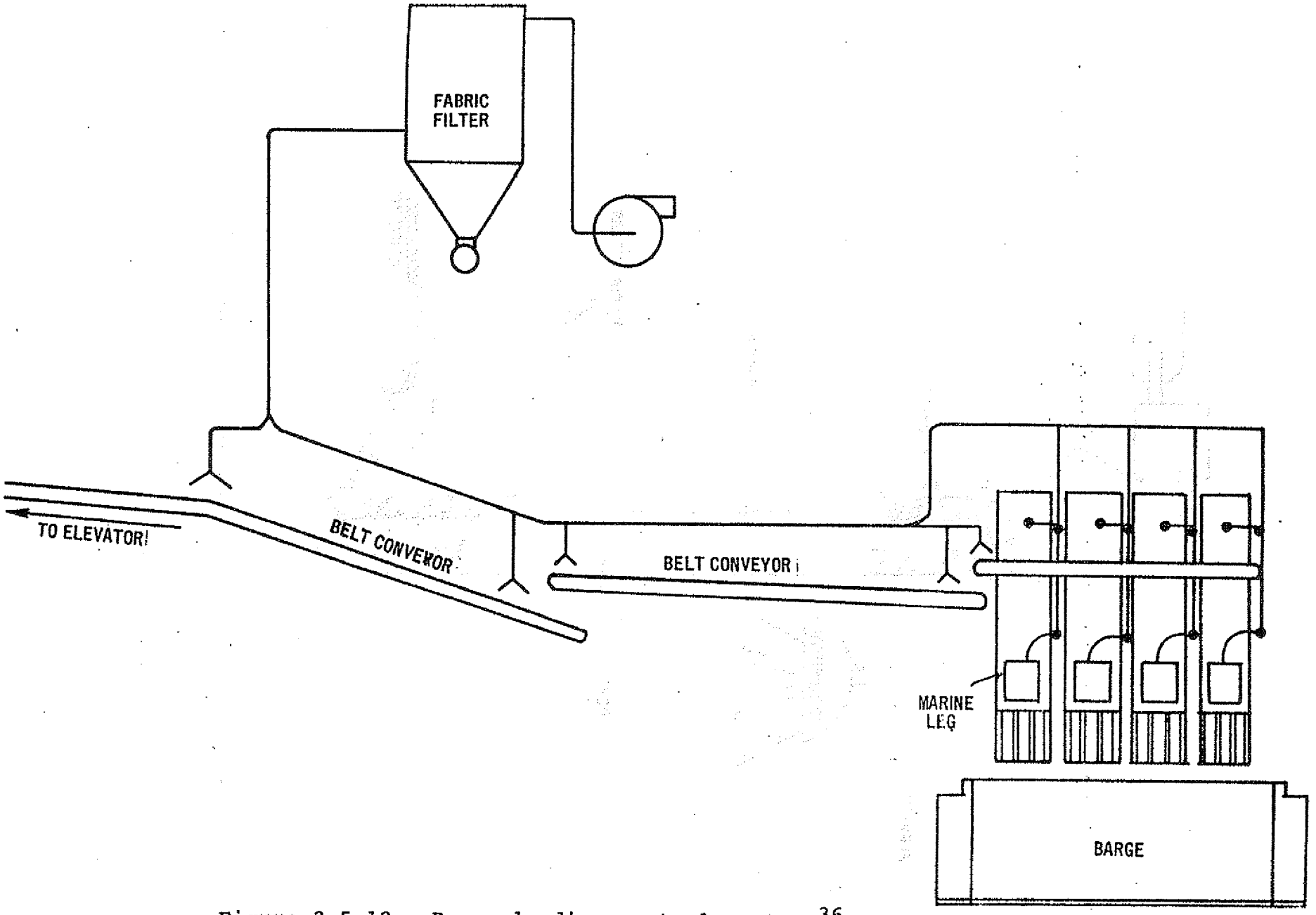

Figure 2.5-12. Barge loading control system.[36]

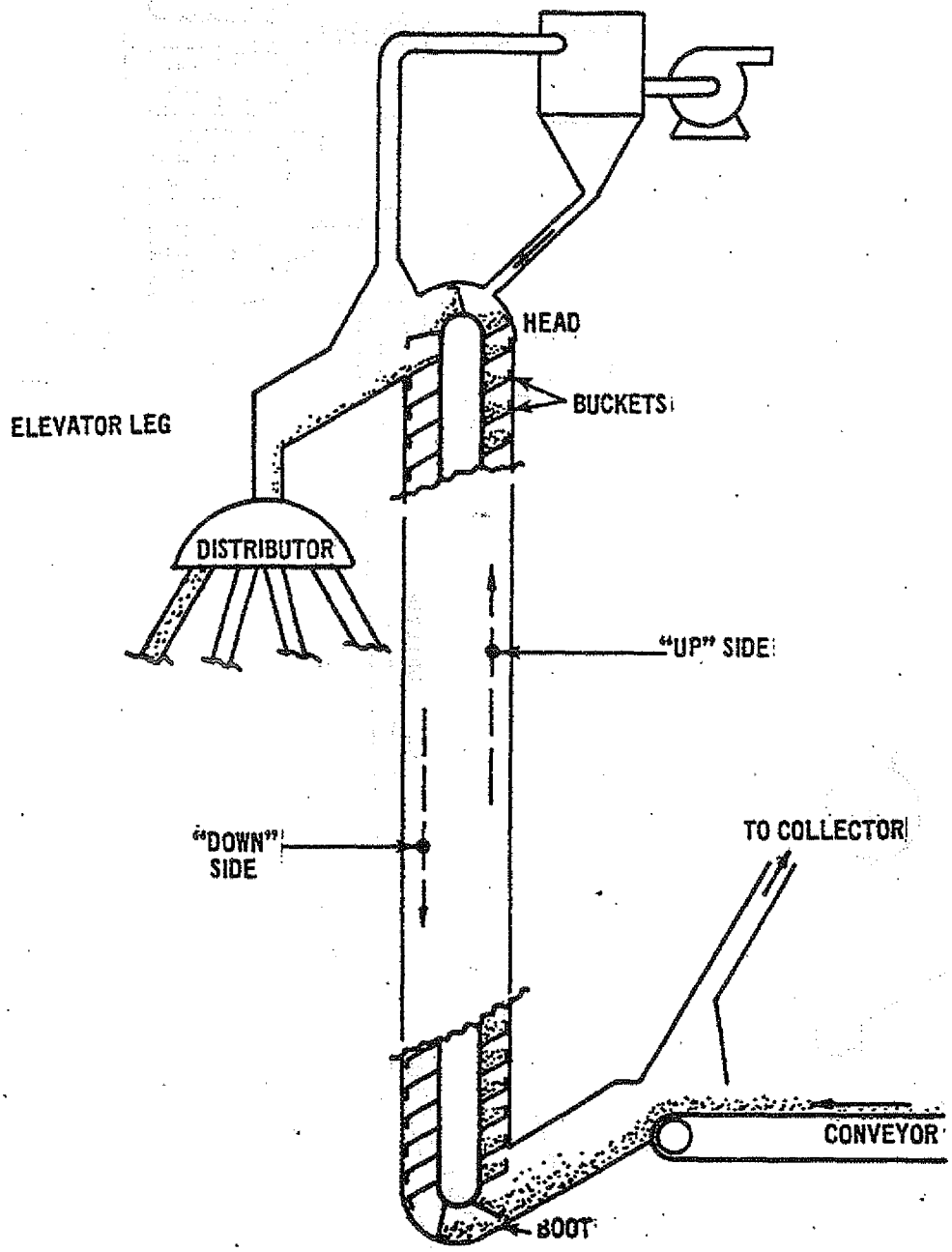

Figure 2.5-13. Elevator leg control system.[37]

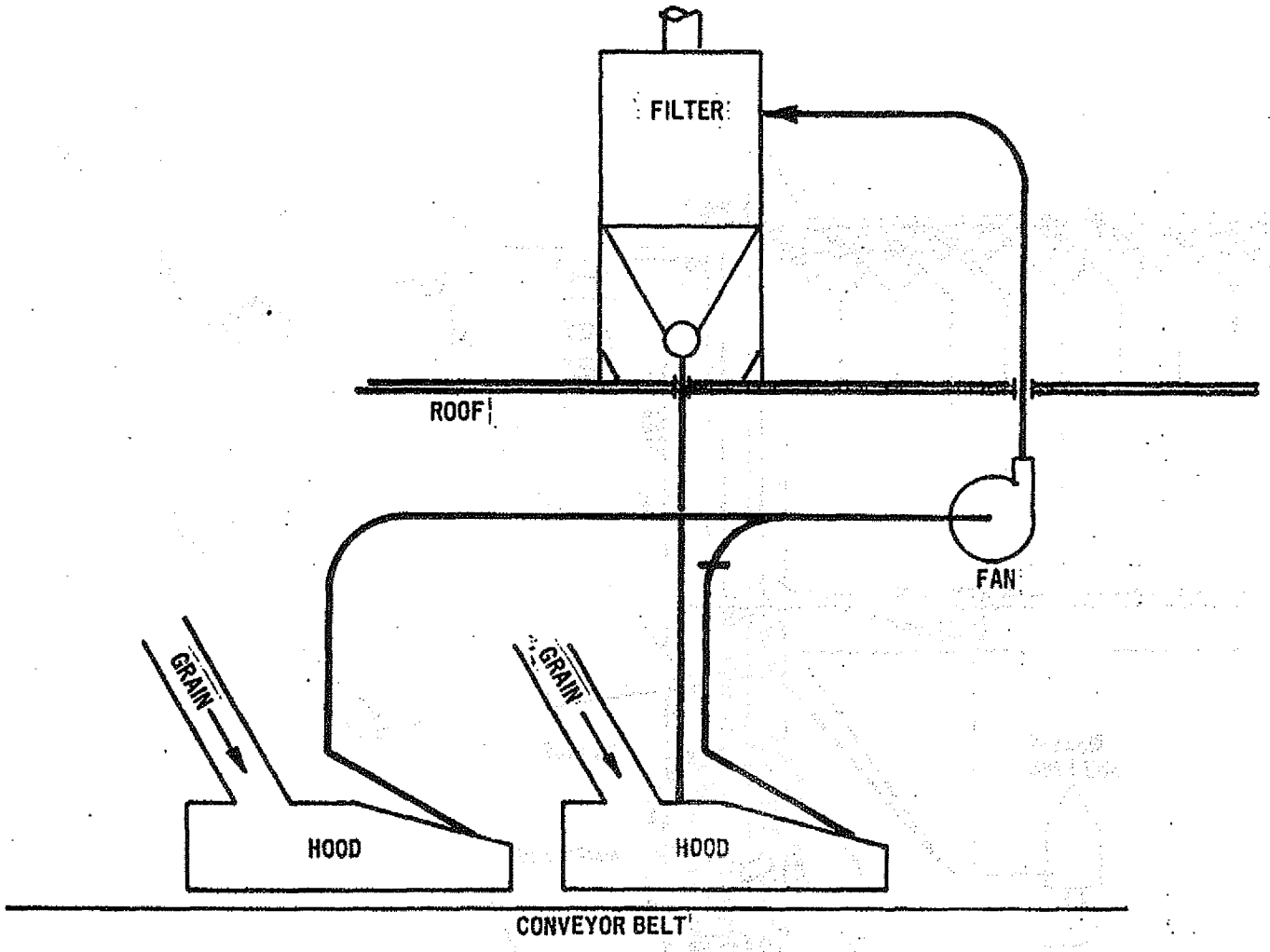

Figure 2.5-14. Transfer point control system.[38]

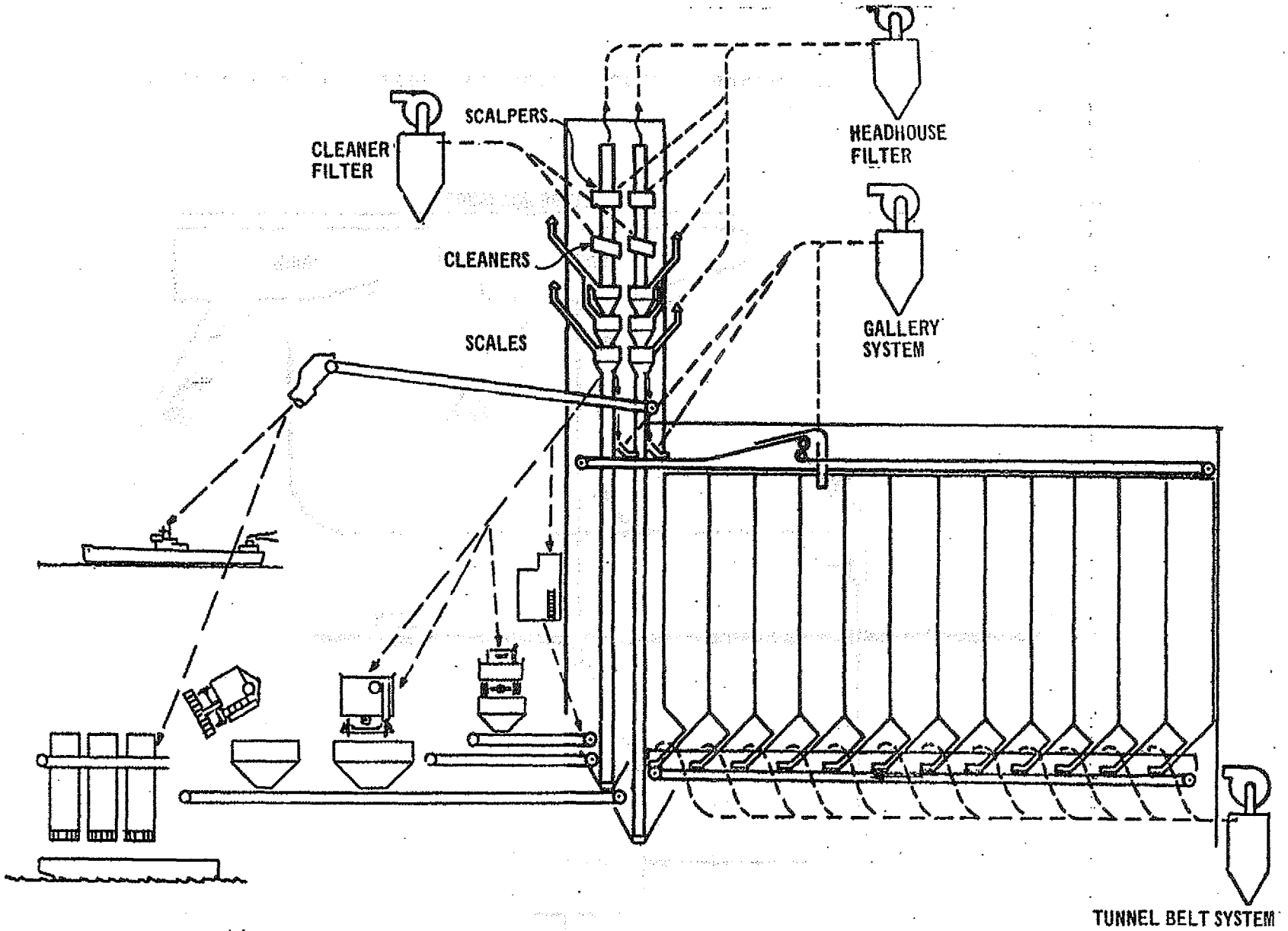

Figure 2.5-15. Grain handling and cleaning control system.39

Grain dryers present a difficult problem for air pollution control. Large volumes of air are exhausted from the dryers, the exhausts have large cross sectional areas, the dust has a low specific gravity, and the exhaust stream has a high moisture content. Rack or column dryers are commonly employed to dry grain at elevators. Column dryers have a lower emission rate than rack dryers since some of the dust is trapped by the columns of grain. The dryers may use screen systems to control particulate matter. The screens must be continuously vacuumed to keep them clean and prevent air flow blockage. Another screen cleaning technique is a sliding-bar, self-cleaning system. A screen filter control system with vacuum cleaning is shown in Figure 2.5-16.

As in truck unloading, the truck loading operation is best controlled if the loading is done in a three-sided and top enclosed shed with a closeable door. The loading involves the free fall of grain into the truck with considerable dust emissions. The dust emissions are reduced by using telescoping spouts (see Figure 2.5-17) or spouts with a canvas sock extension. Control in truck loading of grain is difficult because of variation in the sizes of trucks and the required movement of the loading spout. Aspiration inside an enclosure is used in a few cases by installation of a hood at the discharge end of the spout. The particulate matter is captured and ventilated to a cyclone or fabric filter.

Boxcar grain loading control is not common. One method of control is to cover the door area of the boxcar with a hood and ventilate the particulate matter to a fabric filter or cyclone. (See Figure 2.5-18.) Control of hopper car loading of grain is similar to the methods used for trucks. The loading is often

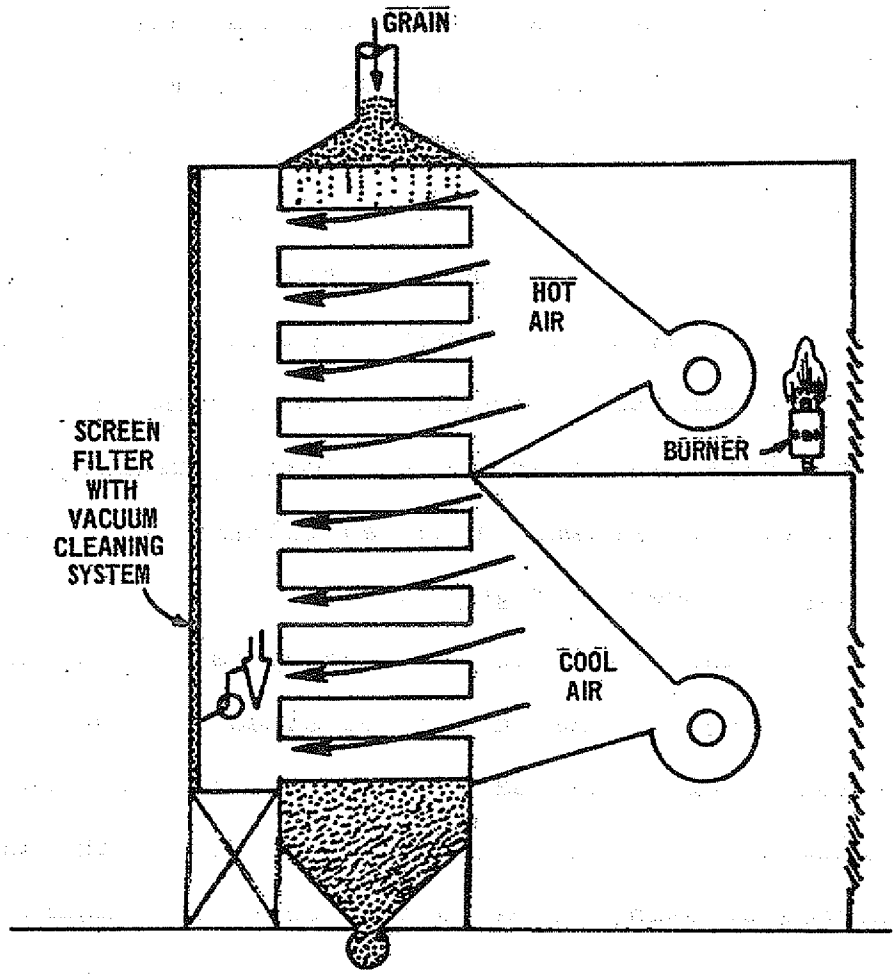

Figure 2.5-16. Rack dryer with screen filter.[40]

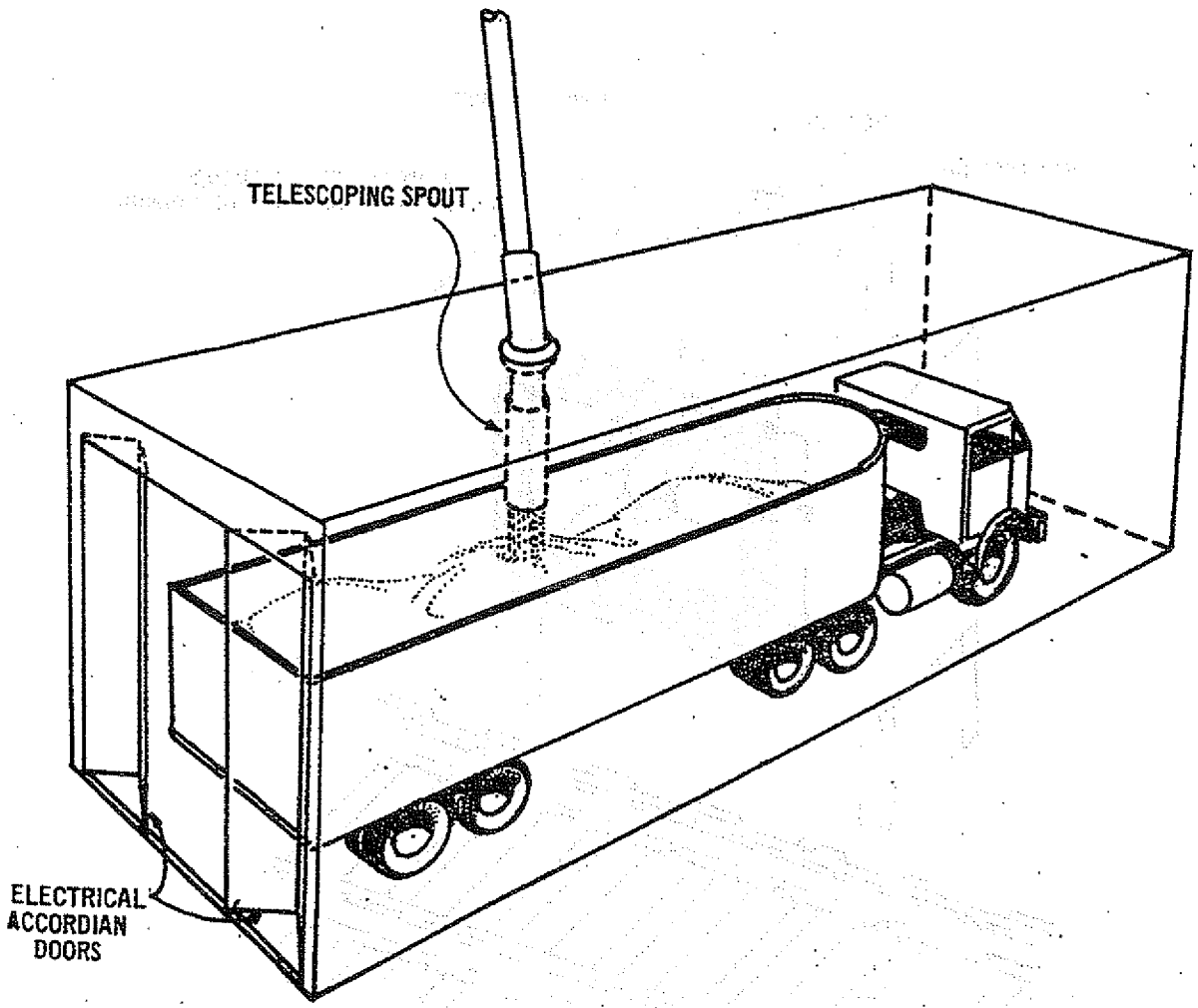

Figure 2.5-17. Truck loading control system.[41]

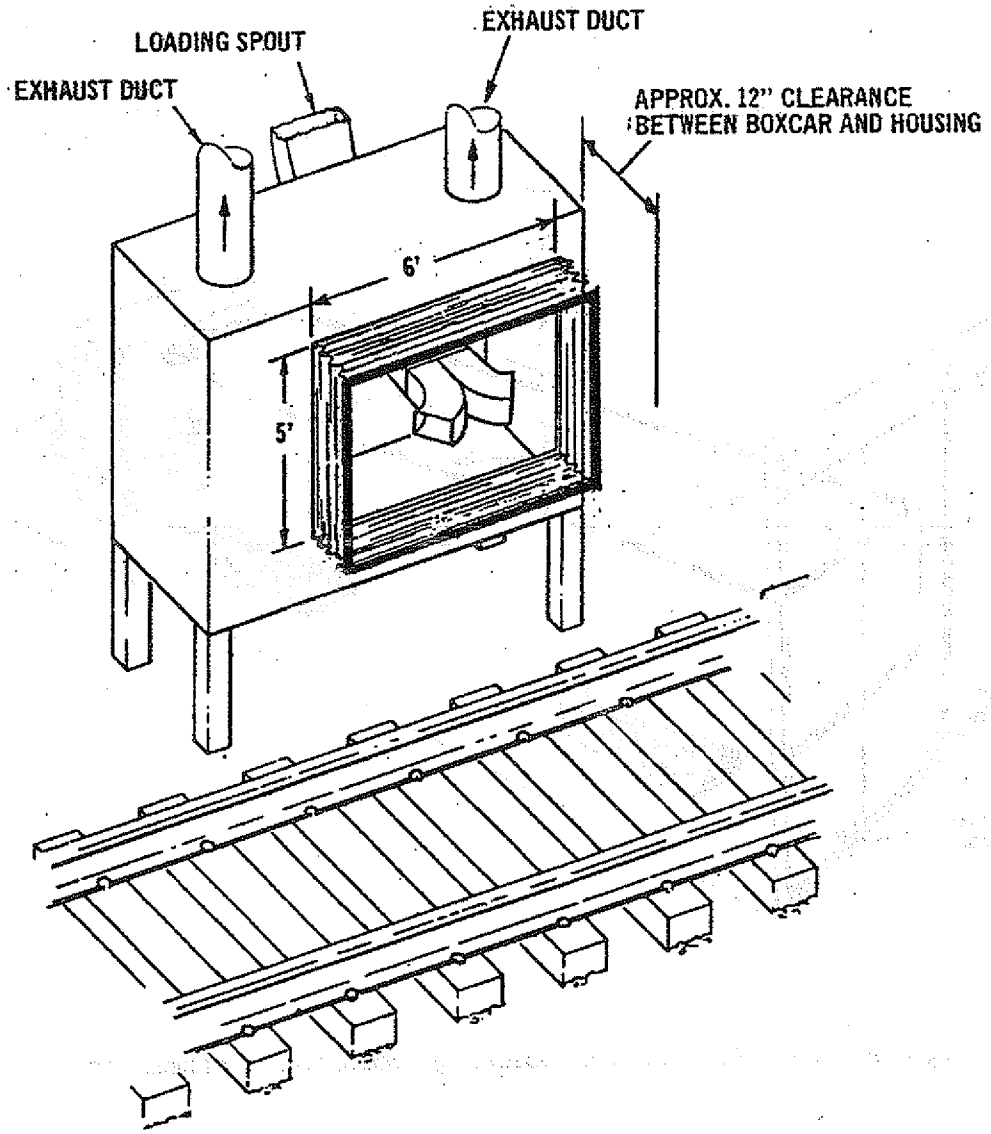

Figure 2.5-18. Boxcar loading control system.[42]

done in a semi-enclosed area. A hood can be installed at the discharge of the loading spout. (See Figure 2.5-19.) The dust generated in hopper car grain loading is ventilated from the hood to a fabric filter or cyclone. Telescoping spouts or choke-feed are also used.

The emissions from loading of barges can be minimized by reducing the freefall distance of the grain. A telescoping spout kept extended to the grain surface (i.e., to provide a choked feed) will reduce emissions. Additional control may be obtained by aspirating the end of the spout and exhausting to a fabric filter or a cyclone. (See Figure 2.5-20.)

For ship loading, a bullet-type or "dead box" system at the end of the loading spout can be used to slow the flow of grain. This may be equipped also with ventilation to cyclone or fabric filter collection to capture any dust generated. Another approach to control the loading of ships is to cover the entire hold with canvas, except where the loading spout enters, and to ventilate from beneath the cover to a fabric filter. However, this control alternative is not feasible during the "topping off" period (i.e., filling the top four feet of the hold), since very rapid movement of the loading spout is necessary to evenly distribute the grain. The system may also be infeasible under severe weather conditions and under high winds.

Table 2.5-3 summarizes the available control techniques, their effectiveness, estimated costs, and RACM selections.

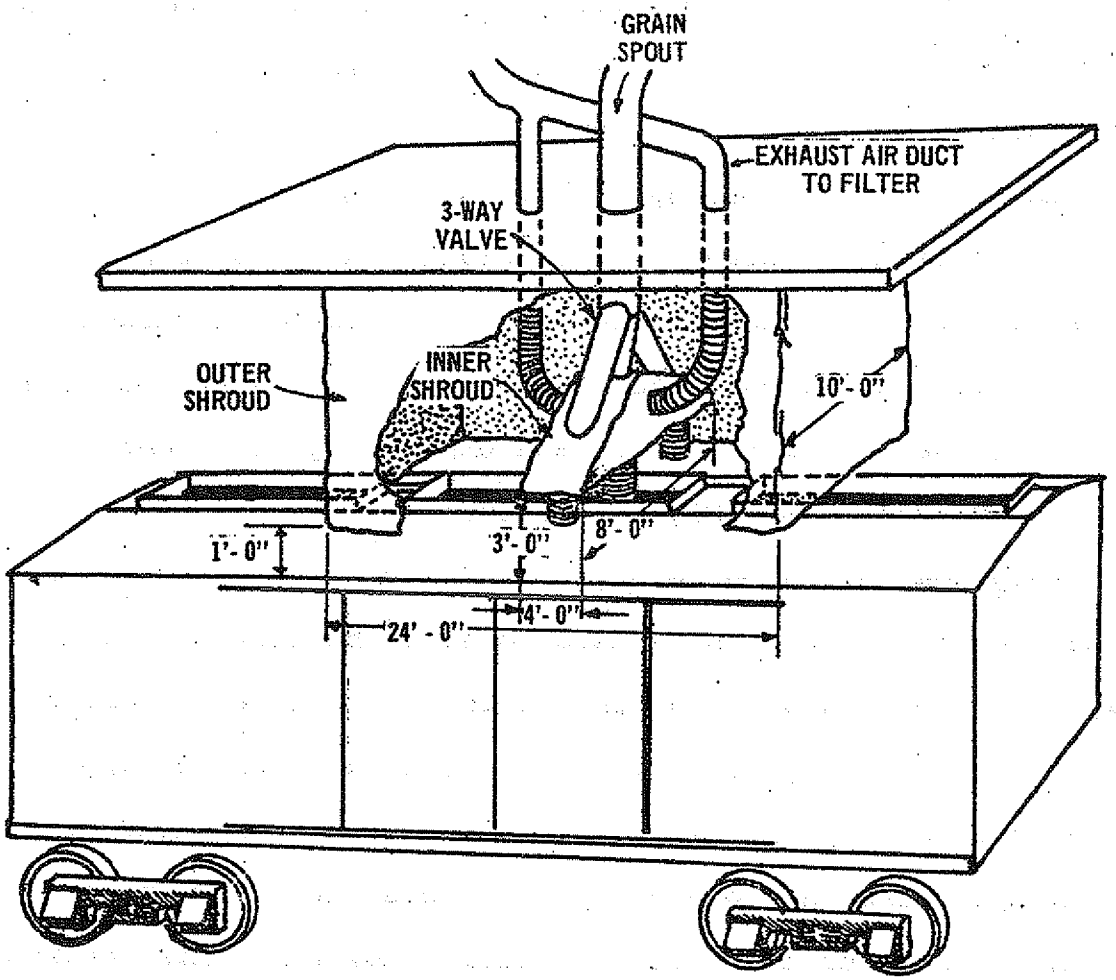

NOTE: 3-WAY VALVE LEADING TO FLEXIBLE LOADING SPOUTS PERMITS LOADING OF CENTER OR SIDE OPENINGS IN TOP OF HOPPER CARS.

Figure 2.5-19. Hopper car loading control system.[43]

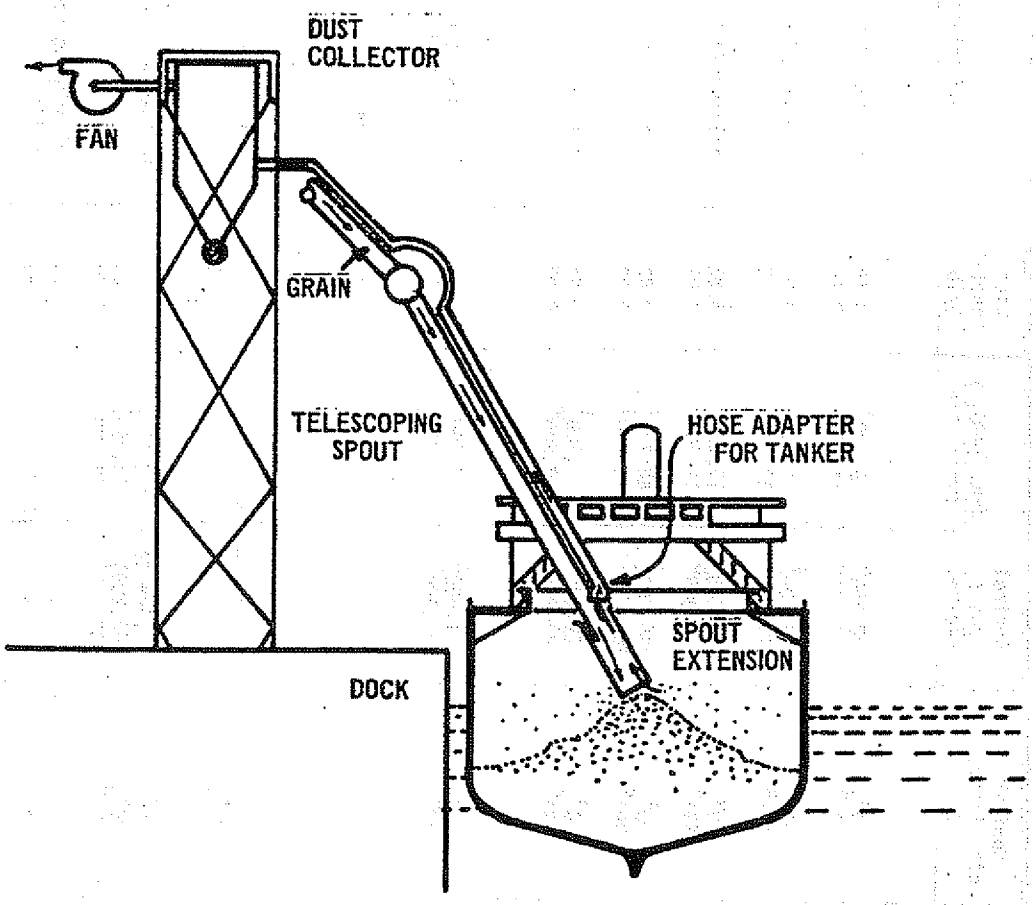

Figure 2.5-20. Barge or ship loading control system.[44]

TABLE 2.5-3. A SUMMARY OF THE CONTROL ALTERNATIVES, EFFICIENCIES AND COSTS, AND THE RACM SELECTIONS FOR FUGITIVE DUST EMISSIONS FROM SOURCES AT GRAIN TERMINALS

Fugitive dust source	Control alternatives	Control efficiency, %	Control costs, Jan. 1980, $ capital	annualized	Cost benefit, $/lb	RACM selection
(1) Receiving:						
Truck unloading	Hopper vented to cyclone	90[a]	28,200[b]	6,100[b]	0.10	Enclosure/fabric filter
	Enclosure[c]/fabric filter	99+[d]	53,500[b]	11,700[b]	0.17	
Railcar unloading	Enclosure[e]/cyclone	90[a]	34,200[f]	6,200[f]	0.01	Enclosure/fabric filter
	Enclosure[e]/fabric filter	99+[g]	71,800[b]	33,900[b]	0.05	
Barge unloading	Enclosure/cyclone	90[g]	39,200[h]	11,200[h]	0.02	Enclosure/fabric filter
	Enclosure/fabric filter	99+[d]	55,000[b]	12,300[b]	0.02	
(2) Transferring and conveying:	Vent to cyclones	90[a]	260,600[i]	68,700[i]	0.03	Vent to fabric filters
	Vent to fabric filters	99+[d]	265,300[j,k]	73,500[j,k]	0.03	
(3) Cleaning:	Vent to cyclone	90[a]	29,400[l]	6,200[l]	0.01	Vent to fabric filter
	Vent to fabric filter	99+[d]	43,400[m]	9,600[m]	0.02	
(4) Drying:						
Rack	Screens (24 mesh)	63[o]	11,000[n]	2,300[n]	0.02	Vacuum screen system (50 mesh)
	Vacuum screen system (50 mesh)	93[o]	51,800[o]	11,300[o]	0.07	
Column	Limit perforation plate hole diameter to 0.084 in.	Unavailable	-	-	N.A.	0.084 in. perforation plate hole diameter
(5) Shipping:						
Truck loading	Adjustable chutes ✓	75[p]	(See Section 2.1)			Enclosure / fabric filter
	Enclosure/cyclone	90[a]	q	q	0.31	
	Enclosure/fabric filter ✓	99+[d]	q	q	0.53	
Railcar loading	Adjustable chutes	75[p]	(See Section 2.1)			Enclosure / fabric filter
	Hood/cyclone	90[a]	62,200[f]	13,000[f]	0.26	
	Enclosure /fabric filter	99+[d]	103,900[f]	22,100[f]	0.40	
Barge loading	Telescoping spout/choked feed/cyclone ✓	90[a]	t	t	0.03	Telescoping spout/choked feed/fabric filter
	Telescoping spout/choked feed/fabric filter	99+[d]	t	t	0.03	
Ship loading	Tarpaulin cover[u]/cyclone	90[u]	41,200[b,v]	11,300[b,v]	0.01	Tarpaulin cover/fabric filter[u] or choke feed/ fabric filter
	Tarpaulin cover[u]/fabric filter	99+[d]	57,000[b,v]	12,400[b,m]	0.01	
	Choke feed[w]/cyclone	90[a]	65,700[o]	13,600[o]	0.01	
	Choke feed[w]/fabric filter	99+[d]	86,100[o]	19,600[o]	0.02	

(continued)

TABLE 2.5-3 (continued)

[a] Reference 12. High efficiency cyclone percent collection.

[b] References 13 and 14. Terminal capacity = 40,000,000 bushels annual throughput. Capital costs include purchase, auxiliaries, direct and indirect equipment installation. Annual costs include capitalization, electrical (at $0.03/kWh), maintenance, property taxes/insurance/administrative costs at 4% total capital investment.

[c] Shed with one (1) quick closing door.

[d] Reference 5. Fabric filter efficiency.

[e] Shed with one (1) end closed.

[f] References 13 and 14. Based on terminal with capacity of 15,000,000 bushels annual throughput.

[g] Assumed cyclone efficiency.

[h] References 13, 14, and 16. Costs estimated for (2) cyclones of 3/16 inch thick carbon steel each at 10,000 ACFM. Capital cost includes purchase price plus direct and indirect installation. Annual cost considers direct (at 11% turnkey) and indirect (overhead at 1% direct operating and capitalization at 17% turnkey) costs.

[i] References 13 and 14. Particulate control costs based on facility with 15,000,000 bushel annual throughput capacity and 10% retrofit penalty.

[j] References 13 and 14. Based on emissions control for scale and surge bins operations only. Facility capacity throughput of 15,000,000 bushels annually. No retrofit penalty.

[k] References 13 and 14. Also includes costs for barge loading controls. Facility capacity throughput of 15,000,000 bushels annually. No retrofit penalty.

[l] References 13 and 14. Based on facility with 15,000,000 bushel annual throughput capacity. No retrofit penalty.

[m] References 13 and 14. Based on facility with 15,000,000 bushel annual throughput capacity. No retrofit penalty.

[n] Estimated at 20% of vacuum system costs.

[o] References 13 and 14.

[p] Reference 17.

[q] Costs should be similar to truck unloading emissions control.

[r] References 13 and 14. Based on facility with 15,000,000 bushels annual throughput capacity. No retrofit penalty.

[s] Shed with open ends, plus special loading spout.

[t] Costs included in above figures for transferring/conveying.

[u] Usage except during topping-off periods in the ship hold or for loading of tween-deckers or tankers.

[v] Reference 18. Costs included for 6825 ft^2 (195 ft x 35 ft - typical barge size) tarpaulin at $0.29 per ft^2. Steel reinforced polyethylene, 4 mils thick.

[w] Reference 19. Typical choke-feed system includes "dead box" or bullet-type loading spouts.

2.5.5 Recommended Reasonably Available Control Measures (RACM)

RACM selections for grain terminal fugitive emission sources are summarized in Table 2.5-3.

The selected control technique for truck unloading is the use of a three-sided shed with one quick-closing door, ventilated to a fabric filter. This system, while less cost effective than venting the hopper to a cyclone, achieves a much better level of control, capable of achieving 0 percent opacity.[20]

For the unloading of railcars, the selected control measure is enclosure of the receiving area with ventilation to a fabric filter. This system is cost effective and no visible emissions result when it is applied.[21]

The selected control technique for unloading barges is the enclosure of the marine leg, receiving hoppers, and conveyor belt, and ventilation to a fabric filter. This system is cost effective and the most efficient of the available control techniques.

For control of transferring and conveying operations, the selected control technique is the venting of emission sources to fabric filters. This would include conveyor transfer points, trippers, turnheads, leg vents, scale bins, surge bins and the head house. This system is cost effective and can achieve an emission level of zero percent opacity.[22]

Control of cleaning operations is best achieved by ventilation to a fabric filter. This method consists of hooding or

enclosing the equipment to collect the particulate matter which is then collected by a fabric filter.

The recommended control for rack dryers is the use of 50 mesh, vacuum cleaned screens. This system can achieve zero percent opacity at a fairly low cost.[23] For column dryers, an equipment standard of 0.084 inch or less diameter perforation plate holes is proposed. This system is effective and can achieve zero percent opacity.[23]

The proposed control technique for truck loading operations is the use of a three-sided shed equipped with one quick closing door and ventilation to a fabric filter. This system is the most effective of those available, although only able to achieve a ten percent opacity level.[24]

Recommended control of railcar loading operations is enclosure of the loading area via a three-sided shed with hooding and ventilation to a fabric filter. This system can achieve zero percent opacity.[25]

The proposed control technique for barge loading operations is the use of telescoping spouts to provide choked feed and aspiration from the spout to a fabric filter. This system is cost effective while providing the best control level of the available control methods.

The recommended control method for loading of ships is the use of tarpaulin covers with aspiration to a fabric filter. This system is not applicable to the loading of tankers or tween-deckers. Also, the tarpaulin must be removed for topping off the

ship. Alternately, a system using choke feeding with ventilation to a fabric filter is recommended where severe weather or other operational contingencies do not favor use of tarpaulins.

Haul roads may be a major source of fugitive emissions around grain terminals. For a detailed treatment of haul roads and recommended control measures, refer to Section 2.1.

REFERENCES FOR SECTION 2.5

1. Thimsen, D.J. and P.W. Aften. A Proposed Design for Grain Elevator Dust Collection. Journal of the Air Pollution Control Association. 18:738-742, November, 1968.

2. Grain Handling and Milling Industry, Background Information for Establishment of National Standards of Performance for New Sources. Environmental Engineering, Inc. EPA Contract No. CPA 70-142. Task Order No. 4. July 15, 1971. Draft.

3. Air Pollutant Emission Factors. TRW Systems Group of TRW, Inc. National Air Pollution Control Administration Contract No. CPA 22-69-119. Report No. APTD-0923. April 1970.

4. Peters, J.A., T.R. Blackwood, and R.A.Wachter. Source Assessment Document No.34, Handling, Transport and Storage of Grain. Monsanto Research Corporation. Dayton, Ohio. EPA Contract No. 68-02-1874. November 1975. Draft.

5. Compilation of Air Pollutant Emission Factors. Second Edition with Supplements 1-5. U.S. Environmental Protection Agency, Office of Air Quality Planning and Standards. Publication No. AP-42. Research Triangle Park, North Carolina. February 1976.

6. Standards Support and Environmental Impact Statement Volume I: Proposed Standards of Performance for Grain Elevator Industry. U.S. Environmental Protection Agency. Office of Air and Waste Management. Office of Air Quality Planning and Standards. Emission Standards and Engineering Division. EPA-450/2-77-77-001a. January 1977. p. 2-29.

7. Ibid. p. 2-31.

8. Shannon, L.J., R.W. Gerstle, P.G. Gorman, D.M. Epp, T.W. Devitt, and R. Amick. Emissions Control in the Grain and Feed Industry, Volume I - Engineering and Cost Study. Midwest Research Institute. Kansas City, Missouri. EPA Contract No. 68-02-0213. Environmental Protection Agency Report EPA-450/3-73-003a. December 1973. p. 583.

9. Op cit. Reference 6 pp. 2-14 and 2-15.

10. Ibid. p. 4-4.

11. PEDCo Environmental, Inc. Technical Guidance for Control of Industrial Process Fugitive Particulate Emissions. Report No. EPA-450/3-77-010. Prepared for the U.S. Environmental Protection Agency. Office of Air and Waste Management. Office of Air Quality Planning and Standards. Contract No. 68-02-1375, Task No. 33. Research Triangle Park, North Carolina. March 1977. pp. 2-271 through 2-274.

12. Op. cit. Reference 6. p. 6-28.

13. Chemical Engineering Economic Indicators. McGraw-Hill Company. September 10, 1979. p. 1.

14. Op. cit. Reference 6 pp. 6-26 through 6-31.

15. Ibid. p. 8-17.

16. Horzella, T.I. Selecting, Installing and Maintaining Cyclone Dust Collectors. Chemical Engineering. McGraw-Hill Company. January 30, 1978. p. 88.

17. Op. cit. Reference 11. p. 2-38.

18. Building Construction Cost Data 1979. Robert Snow Means Company. Duxbury, Massachusetts. 1979. p. 5.

19. Op. cit. Reference 6. p. 8-29.

20. Op. cit. Reference 6. p. 4-6.

21. Ibid. pp. 4-8, 4-9.

22. Ibid. p. 4-18.

23. Ibid. p. 4-19.

24. Ibid. p. 4-24.

25. Ibid. p. 4-26.

26. Ibid. p. 2-13.

27. Ibid. p. 2-18.

28. Ibid. p. 2-21.

29. Ibid. p. 2-27.

30. Ibid. p. 2-30.

31. Ibid. p. 2-32.

32. Ibid. p. 2-36.

33. Ibid. p. 4-5.

34. Ibid. p. 4-7.

35. Ibid. p. 4-10.

36. Ibid. p. 4-11.

37. Ibid. p. 4-16.

38. Ibid. p. 4-14.

39. Ibid. p. 4-15.

40. Ibid. p. 4-20.

41. Ibid. p. 4-23.

42. Ibid. p. 4-27.

43. Ibid. p. 4-25.

44. Ibid. p. 4-29.

APPENDIX FOR SECTION 2.5

(1) Receiving

Assume capacity = 40,000,000 bu/yr
Avg. wt. = 58 lb/bu
Emissions = (0.6 lb/ton)(40,000,000 bu/yr)(58 lb/bu)(t/2000 lbs)
= 696,000 lbs/yr
10% by truck; 69,600 lbs/yr

Truck unloading

Hopper vented to cyclone

Capital cost = $28,200
Annual cost = $6,100

$$C/B = \frac{\$6,100/yr}{.9\ (69,600)} = \$0.10/lb$$

Enclosure/fabric filter

Capital cost = $53,500
Annual cost = $11,700

$$C/B = \frac{\$11,700/yr}{.99\ (69,600)} = \$0.17/lb$$

Railcar Unloading (50% by rail)
Emissions = (1.3 lb/ton)(20,000,000 bu/yr)(58 lb/bu)(t/2000 lbs)
= 754,000 lbs/yr

Enclosure / cyclone

Capital cost = $34,200
Annual cost = $6,200

$$C/B = \frac{\$6,200/yr}{.9\ (754,000)} = \$0.01/lb$$

Enclosure / fabric filter

Capital cost = $71,800
Annual cost = $33,900

$$C/B = \frac{\$33,900/yr}{.99\ (754,000)} = \$0.05/lb$$

Barge unloading (40% by barge)
Emissions = (1.7 lb/ton)(16,000,000 bu/yr)(58 lb/bu)(t/2000 lbs)
= 788,800 lbs/yr

Enclosure / cyclone

Capital cost = $39,200
Annual cost = $11,200

$$C/B = \frac{\$11,200/yr}{.9\ (788,800)} = \$0.02/lb$$

Enclosure / fabric filter

Capital cost = $55,000
Annual cost = $12,300

$$C/B = \frac{\$12,300/yr}{.99\ (788,800)} = \$0.02/lb$$

(2) Transferring and conveying

Assume 15,000,000 bu/yr

Emissions = (6.0 lb/ton)(15,000,000)(58 lb/bu)(t/2000 lbs)
+ (1.2 lb/ton)(0.35)(15,000,000)(58)(1/2000)
= 2,792,700 lbs/yr

Vent to cyclones

Capital cost = $260,600
Annual cost = $68,700

$$C/B = \frac{\$68,700/yr}{.9\ (2,792,700)} = \$0.03/lb$$

Vent to fabric filters

Capital cost = $265,300
Annual cost = $73,500

$$C/B = \frac{\$73,500/yr}{.99\ (2,792,000)} = \$0.03/lb$$

(3) Cleaning

Emissions = (6 lb/ton)(0.221)(15 x 10^6)(58)(1/2000)
= 576,800 lbs/yr

Vent to fabric filter

Capital cost = $43,400
Annual cost = $9,600

$$C/B = \frac{\$9,600/yr}{.9\ (576,800)} = \$0.02/lb$$

Vent to cyclone

Capital cost = $29,400
Annual cost = $6,200

$$C/B = \frac{\$6,200/yr}{.9\ (576,800)} = \$0.01/lb$$

(4) Drying

Basis: 1.5×10^6 bu/yr

Emissions (Rack dryer) = $(1.5 \times 10^6)(4\ \text{lb/ton})(58)(1/2000)$
= 174,000 lbs/yr

Screens (24 mesh)

Capital cost = $11,000
Annual cost = $2,300

$$C/B = \frac{\$2{,}300/\text{yr}}{.63\ (174{,}000)} = \$0.02/\text{lb}$$

Vacuum screen system

Capital cost = $51,800
Annual cost = $11,300

$$C/B = \frac{\$11{,}300/\text{yr}}{.93\ (174{,}000)} = \$0.07/\text{lb}$$

No data for column dryers

(5) Shipping

Truck loading

Emissions = $(0.3\ \text{lb/ton})(15{,}000{,}000)(58)(1/2000)(.17)$
= 22,200 lbs/yr

Adjustable chutes

See Section 2.1

Enclosure / cyclone

Capital cost = $28,200
Annual cost = $6,100

$$C/B = \frac{\$6{,}100/\text{yr}}{.9\ (22{,}200)} = \$0.31/\text{lb}$$

Enclosure / fabric filter

Capital cost = $53,500
Annual cost = $11,700

$$C/B = \frac{\$11{,}700/\text{yr}}{.99\ (22{,}200)} = \$0.53/\text{lb}$$

Railcar loading

Emissions = $(0.27\ \text{lb/ton})(15{,}000{,}000)(58)(1/2000)(0.48)$
= 56,400 lbs/yr

Adjustable chutes

See Section 2.1

Hood / cyclone

Capital cost = $62,200
Annual cost = $13,000

$$C/B = \frac{\$13,000/yr}{.9\ (56,400)} = \$0.26/lb$$

Enclosure / fabric filter

Capital cost = $103,900
Annual cost = $22,100

$$C/B = \frac{\$22,100/yr}{.99\ (56,400)} = \$0.40/lb$$

Barge loading

Choke feed / cyclone

See 2
C/B = $0.03/lb

Choke feed / fabric filter

See 2
C/B = $0.03/lb

Ship loading

Emissions = (1.2 lb/ton)(40,000,000)(58)(1/2000)(.94)
= 1,308,500 lbs/yr

Tarpaulin cover / cyclone

Capital cost = $41,200
Annual cost = $11,300

$$C/B = \frac{\$11,300/yr}{.9\ (1,308,500)} = \$0.01/lb$$

Tarpaulin / fabric filter

Capital cost = $57,000
Annual cost = $12,400

$$C/B = \frac{\$12,400/yr}{.99\ (1,308,500)} = \$0.01/lb$$

Telescoping spout / choked feed / cyclone

Capital cost = $65,700
Annual cost = $13,600

$$C/B = \frac{\$13,600/yr}{.9\ (1,308,500)} = \$0.01/lb$$

Telescoping spout / choked feed / fabric filter

Capital cost = $86,100
Annual cost = $19,600

$$C/B = \frac{\$19,600/yr}{.99\ (1,308,500)} = \$0.02/lb$$

2.6 COUNTRY GRAIN ELEVATORS

2.6.1 Process Description

Country grain elevators receive and store grain with subsequent shipment to terminal elevators, mills and other processing plants. In addition to storage, the country elevator sometime includes facilities to clean the grain, to dry it, or both. Grains handled includes corn, oats, wheat, rye, soybeans and burley.

The grain received at the country elevator is primarily received by truck or tractor from farms that are within a 10-12 mile radius.

Storage capacities of country elevators can range from 4,000 to 750,000 bushels.[1] The average size in the U.S. in 1974 was 441,000 bushels.[1] On the average, country elevators handle about 2 times as much grain as their storage capacity. For example, a country elevator with an average storage capacity of 441,000 bushels would handle about 880,000 bushels of grain per year.

The country elevators most often consist of upright concrete bins. Simplified and stylized diagrams of upright country elevators are shown in Figures 2.6-1 and 2.6-2. These elevators are usually designed to make maximum use of gravity flow to simplify the operation and minimize the use of mechanical equipment. The major piece of mechanical equipment required is the bucket elevator, or "leg", which elevates the grain to the top of the elevator where it is discharged into the distributor head and

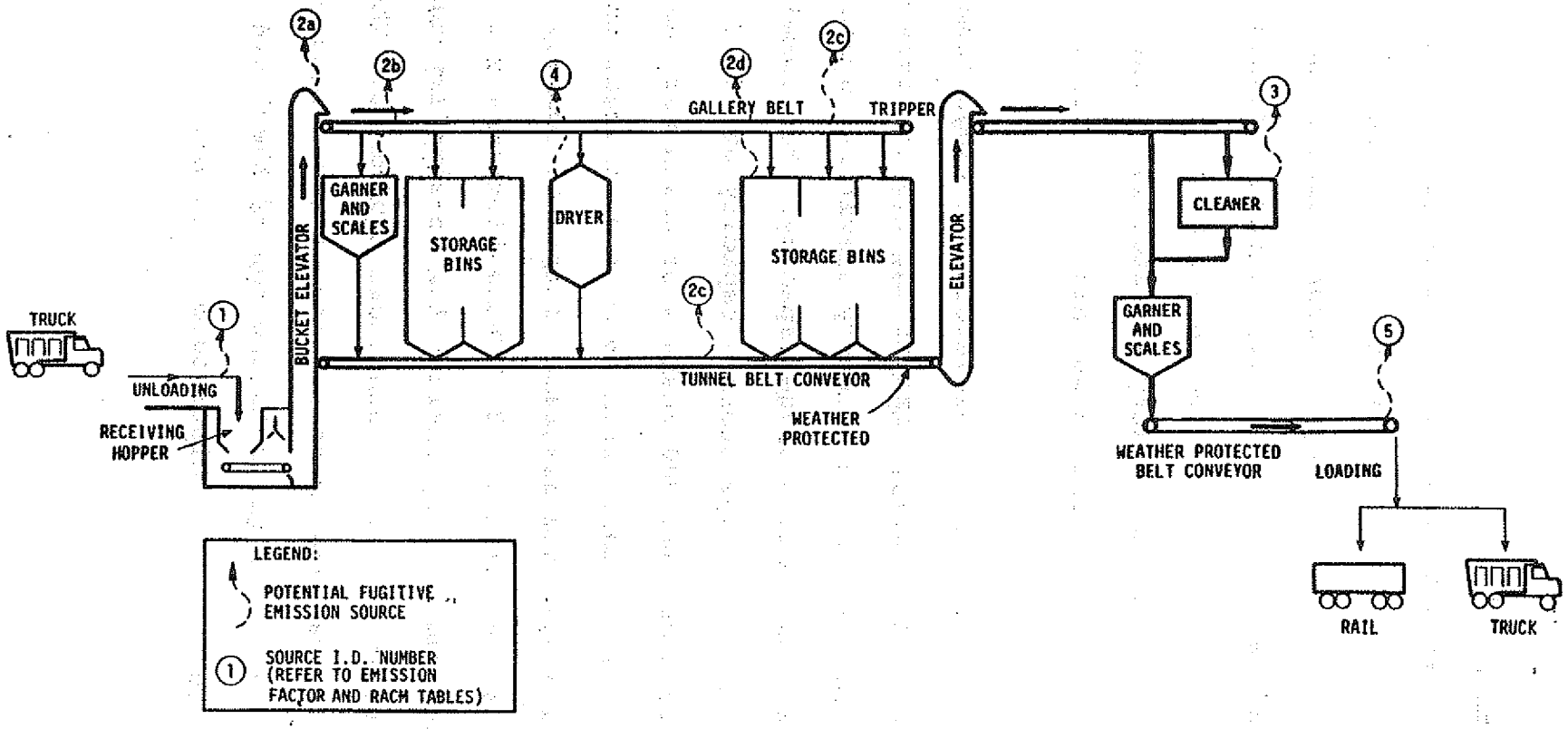

Figure 2.6-1. Simplified process flow diagram for country grain elevators and associated fugitive particulate emission sources.

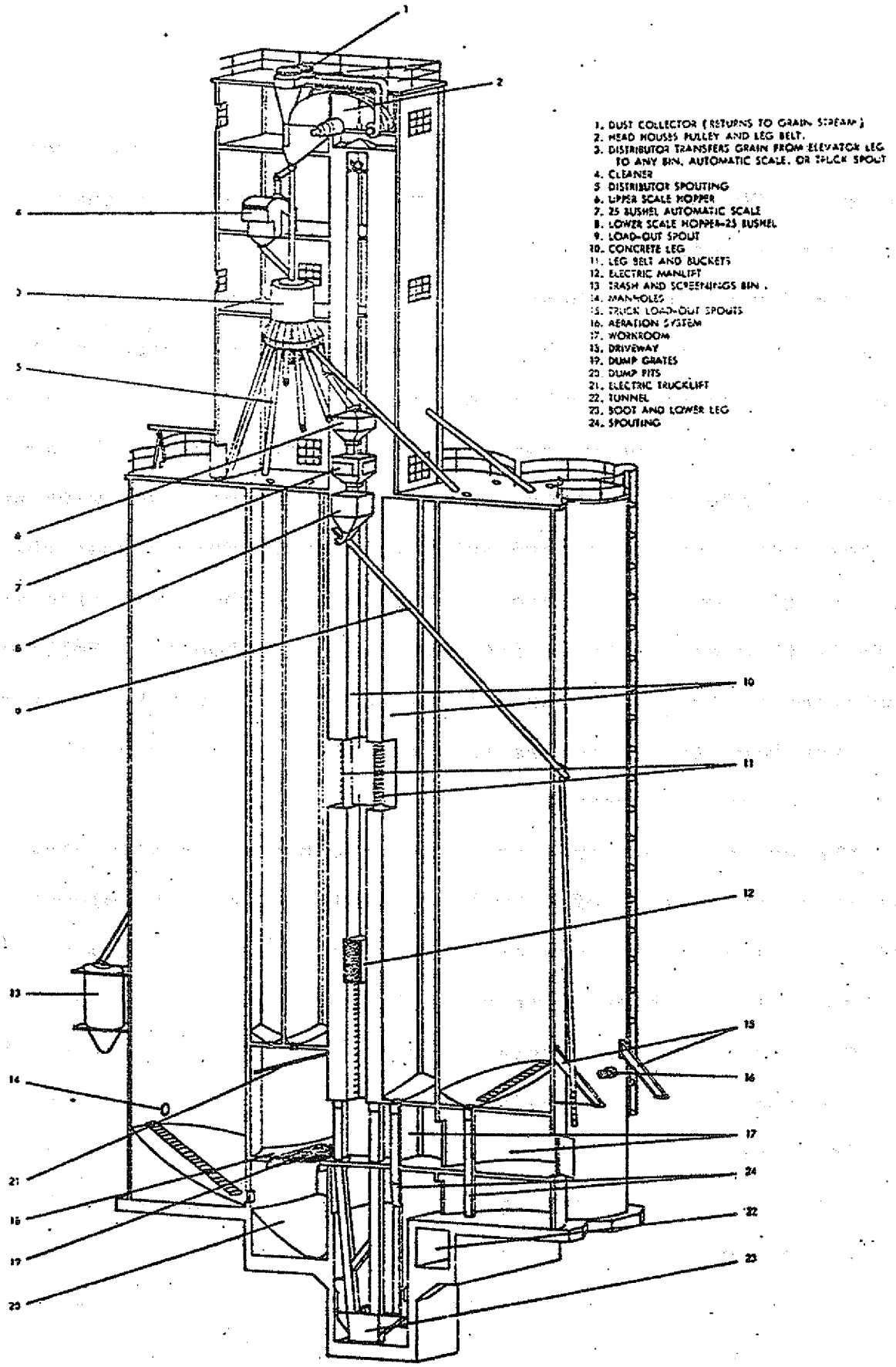

Figure 2.6-2. Diagram of an upright country grain elevator.[15]

then directed to the desired bin or into the scale for direct load-out. The section of the elevator which performs these functions is referred to as the "headhouse."

The first step in handling the grain after it arrives at the elevator is to weigh-in the loaded truck. After weigh-in, the truck is driven to the unloading station which is often a drive-through tunnel in the center of the elevator. The trucks are usually unloaded by lifting the front end of the truck with an overhead wench system or hydraulic platform. This causes the grain to flow out the opening in the back of the truck from which it falls through a grating into the receiving hopper. Following completion of the unloading and lowering of the truck, the truck is driven back to the scales and reweighed to determine the quantity of grain received.

The grain dumped into the receiving hopper usually flows by gravity to the bottom of a bucket elevator (i.e., the elevator boot). In some cases, the grain is transported from the receiving hopper to the boot by means of belt, drag or screw conveyors.

The receiving leg, averaging 5000-7500 bu/hr, elevates the grain to the top of the headhouse where it is discharged through the distributor head. The distributor head is positioned to direct the grain into the appropriate storage bins or to the cleaning equipment. Grain received from the farm usually contains a variety of impurities and a cleaning operation is sometimes performed prior to sending the grain to storage bins. Various types of screens and aspiration systems can be used to

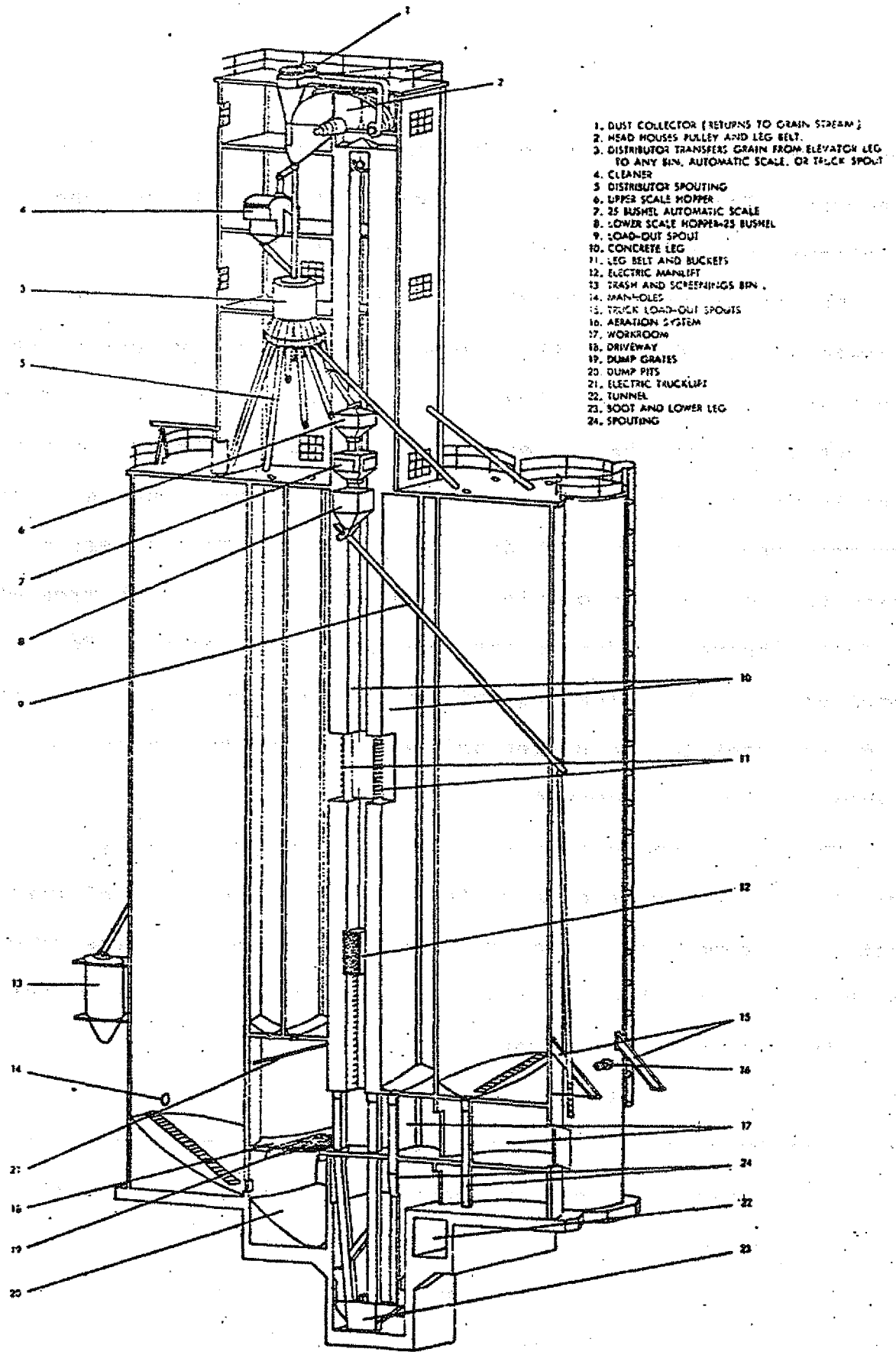

Figure 2.6-2. Diagram of an upright country grain elevator.[15]

then directed to the desired bin or into the scale for direct load-out. The section of the elevator which performs these functions is referred to as the "headhouse."

The first step in handling the grain after it arrives at the elevator is to weigh-in the loaded truck. After weigh-in, the truck is driven to the unloading station which is often a drive-through tunnel in the center of the elevator. The trucks are usually unloaded by lifting the front end of the truck with an overhead wench system or hydraulic platform. This causes the grain to flow out the opening in the back of the truck from which it falls through a grating into the receiving hopper. Following completion of the unloading and lowering of the truck, the truck is driven back to the scales and reweighed to determine the quantity of grain received.

The grain dumped into the receiving hopper usually flows by gravity to the bottom of a bucket elevator (i.e., the elevator boot). In some cases, the grain is transported from the receiving hopper to the boot by means of belt, drag or screw conveyors.

The receiving leg, averaging 5000-7500 bu/hr, elevates the grain to the top of the headhouse where it is discharged through the distributor head. The distributor head is positioned to direct the grain into the appropriate storage bins or to the cleaning equipment. Grain received from the farm usually contains a variety of impurities and a cleaning operation is sometimes performed prior to sending the grain to storage bins. Various types of screens and aspiration systems can be used to

clean the grain. Removal of the grain from the storage bins (load-out) is usually performed by gravity flow back to the elevator boot, re-elevated and again discharged through the distributor. Country elevators ship primarily by truck or rail-car.

Certain grains, especially corn, must be dried before they are suitable for long-term storage. Elevators that receive these grains for long-term storage must be equipped with drying facilities. Certain dryers require an additional leg to elevate the wet grain from intermediate storage bins to the top of the dryer, and a means of conveying the dried grain from the dryer back to the primary leg for elevation to final storage. Grain dryers come in a wide range of capacities, and the size installed in country elevators is dependent upon the quantity of wet grain that is expected to be processed. The average drying operation would consist of a single dryer with a size capacity of 500-2000 bu/hr.

Fugitive emission sources at country grain elevators include grain receiving, transferring and conveying, screening and cleaning, drying and shipping. These sources are identified in Figure 2.6-1.

2.6.2 Fugitive Dust Emission Factors

Estimated fugitive emission factors for country grain elevators are summarized in Table 2.6-1. The emission factors are based upon a limited number of tests on grain elevators. It was found that the emission rates can vary greatly depending upon the types and characteristics of the grain being handled. Field

TABLE 2.6-1. FUGITIVE DUST EMISSION FACTORS FOR COUNTRY GRAIN ELEVATORS

Source	Emission factor, Average, (range)	Reliability rating	Reference
1 Receiving Truck unloading	0.6 lb/ton unloaded (0.32 to 8.0 lb/ton)	D	2,3,4
2 Transferring and conveying (total); Including:	2.5 lb/ton (2.0 to 4.0 lb/ton)	D	2,4,5,6
2a. Receiving, elevator leg and head	a		
2b. Garner and scale vents	a		
2c. Distributor, trippers, spouting	a		
2d. Storage bin vents	a		
3 Screening and cleaning	3.0 lb/ton cleaned (0.19 to 10.1 lb/ton)	E	2,4,6
4 Drying: Column	0.5 lb/ton dried (0.19 to 1.1 lb/ton)	D	2,3,4,7,8,9
Rack	4.0 lb/ton dried (1.8 to 8.0 lb/ton)	D	2,3,4,7,8,9
5 Shipping Truck loading	0.3 lb/ton loaded (0.14 to 8.0 lb/ton)	D	2,3,4,5
Railcar loading	0.27 lb/ton loaded (0.015 to 8.0 lb/ton)	D	2,3,4,5

[a] Included in total estimate.

run grains such as soybeans, oats and sorghum are very dusty compared to wheat or corn. However, the data is insufficient for quantification of different emission factors by grain type. Therefore, the emission factors available cannot be considered accurate for any specific operation.

2.6.3 Particle Characterization

The fugitive particulate emissions from country grain elevators result from the unclean state in which grain is received at the elevators and from the generation of small particles by various physical handling operations. The grain may contain a small amount of spores of smuts and molds, insect parts, weed seeds, various pollens and siliceous dust from vegetation and soil in the vicinity of where it was grown. However, most of the dust is composed of bristles and other particles from the outer coats of the grain kernels. These particles are produced by the abrasion of the individual kernels of grain.

Grain dust has a specific gravity normally in the range 0.8 to 1.5 as compared to various other industrial dusts which usually have specific gravities between 2.0 and 2.5.[8] Grain dust is mostly in the range of 10 to 100 μm in size.[7]

Table 2.6-2 presents the results of size distribution tests of the material entering the inlet of a cyclone which vented an elevator leg.[6] These cyclone inlet emissions can be considered an approximation of the particle size distribution of the fugitive particulate emissions from an uncontrolled elevator leg vented to the atmosphere.

TABLE 2.6-2. PARTICULATE SIZE DISTRIBUTION FOR DUST FROM AN ELEVATOR LEG CYCLONE (INLET TEST)[6]

US Sieve mesh	Size opening (μm)	Cumulative weight, percent greater than
100	149	32.7
170	88	44.7
200	74	48.7
325	44	68.0
-	20	91.0
-	10	99.1
-	5	99.9
-	1	99.9

During corn drying, a material called "bees wings," which is the filmy outer skin of the corn kernel, is emitted into the air along with the grain dust. Essentially all bees wing emissions are over 50 μm in diamter, and the mass mean diameter is probably in the region of 150 μm.[8]

Additional information on toxicity and other health effects is presented in Section 2.5.3.

2.6.4 Control Methods

The control methods for country grain elevators are essentially identical to those for large grain terminals except on a smaller scale. A discussion of the available control techniques is presented in Section 2.5.4. Table 2.6-3 summarizes these techniques plus their efficiencies, estimated costs, and the RACM selections.

TABLE 2.6-3. A SUMMARY OF THE CONTROL ALTERNATIVES, EFFICIENCIES AND COSTS, AND THE RACM SELECTIONS FOR FUGITIVE DUST EMISSIONS FROM SOURCES AT COUNTRY GRAIN ELEVATORS

Fugitive dust sources	Control alternatives	Control efficiency, %	Control cost, Jan. 1980, $ Capital	Control cost, Jan. 1980, $ Annualized	Cost benefit, $/lb	RACM selection
(1) Receiving: Truck unloading	Hopper vented to cyclone	90[a]	42,700[b,c]	8,700[b,c]	0.44	Enclosure vented to fabric filter (for capacities less than 700,000 bu/yr a 3-sided shed is recommended)
	Enclosure[d] vented to fabric filter	99+[e]	72,200[b,c]	14,900[b,c]	0.69	
	Enclosure (3-sided)	60[f]	27,700[g]	6,100[g]	0.59	
(2) Transferring and conveying Handling, weighing	Vent to cyclone	90[a]	14,100[b]	3,000[b]	0.05	Vent to fabric filter (for capacities less than 700,000 bu/yr, venting by a cyclone is recommended)
	Vent to fabric filter	99+[e]	22,100[b]	4,700[b]	0.07	
(3) Cleaning	Vent to cyclone	90[a]	16,100[h]	3,400[h]	0.54	Vent to fabric filter (for capacities less than 700,000 bu/yr, venting to a cyclone is recommended)
	Vent to fabric filter	99+[e]	23,900[h]	6,000[h]	0.86	
(4) Drying: Rack	Vent to cyclone	90[i]	79,000[j]	22,200[j]	2.13	50 mesh vacuum-cleaned screen
	Vacuum screen system (50 mesh)	93[k]	35,900[k]	7,300[k]	0.68	
Column	Limit perforation plate hole diameter to 0.084 in.	Unavailable	-	-	N.A.	0.084 in. perforation plate hole diameter
(5) Shipping: Truck loading	Adjustable chutes	75[l]	(See Section 2.1)			
	Vent to cyclone	90[a]	42,700[b,c]	8,700[b,c]	2.22	Enclosure vented to fabric filter (for capacities less than 700,000 bu/yr, adjustable chutes are recommended)
	Enclosure[d] vented to fabric filter	99+[e]	72,200[b,c]	14,900[b,c]	3.46	
Railcar loading	Adjustable chutes	75[j]	(See Section 2.1)			
	Hood vented to cyclone	90[a]	27,000[h]	5,700[j]	1.62	Enclosure vented to fabric filter (for capacities less than 700,000 bu/yr, adjustable chutes are recommended)
	Enclosure vented to fabric filter	99+[e]	62,700[j]	12,500[h]	3.23	

(continued)

TABLE 2.6-3 (continued)

[a] Reference 10. High efficiency cyclone.

[b] References 10 and 11. Terminal capacity-1,000,000 bushels annual throughput. Capital costs include purchase, auxiliaries, direct and indirect equipment installation. Annual costs include capitalization, electrical (@ $0.03/kWh), maintenance, property taxes/insurance/administrative costs at 4% total capital investment.

[c] Includes truck loading.

[d] Shed with one (1) quick closing door.

[e] Reference 12. Fabric filter.

[f] Estimated.

[g] Estimated as difference between options B anc C, Reference 12, upgraded country elevator handling 3,500,000 bu/yr.

[h] References 11 and 13. Based on an upgraded country facility with 3,500,000 bushels annual throughput capacity and retrofit penalty of 10 percent. Cleaning is not always conducted at country elevators.

[i] Assumed cyclone efficiency.

[j] References 11 and 14. Costs estimated for cyclone of 3/16 inch thick carbon steel @ 50,000 ACFM. Capital turnkey includes purchase price plus direct/indirect installation. Annual cost considers direct (at 11% turnkey) and indirect (overhead at 1% direct operating and capitalization at 17% turnkey) costs.

[k] References 11 and 13.

[l] Reference 15.

2.6.5 Recommended Reasonably Available Control Measures (RACM)

Table 2.6-3 presents RACM recommended for the control of country grain elevator fugitive emissions. Just as the control alternatives available to larger grain terminals are essentially identical for country grain elevators (yet on a smaller scale), so are the designated RACM selected.

However, it is recommended that a size be determined below which control is not required due to high relative cost. The U.S. EPA, in its economic analysis of the impacts of various regulatory options, has determined that control costs are essentially fixed for elevators smaller than 1 million bushels per year.[16] The U.S. EPA has determined that country elevators handling less than 700,000 bushels per year will not be governed by New Source Performance Standards.[16] Therefore, country elevators handling less than 700,000 bushels per year will be required to implement the alternative control options listed in Table 2.6-3.

REFERENCES FOR SECTION 2.6

1. Standards Support and Environmental Impact Statement Volume I: Proposed Standards of Performance for the Grain Elevator Industry. U.S. Environmental Protection Agency. Office of Air and Waste Management. Office of Air Quality Planning and Standards. Emission Standards and Engineering Division. EPA-450/2-77-001a. January 1977. p. 2-7.

2. Air Pollutant Emission Factors. TRW Systems Group of TRW, Inc. National Air Pollution Control Administration Contract No. CPA 22-69-119. Report No. APTD-0923. April 1970.

3. Peters, J.A., T.R. Blackwood, and R.A. Wachter. Source Assessment Document No.34. Handling, Transport and Storage of Grain. Monsanto Research Corporation. Dayton, Ohio EPA Contract No. 68-02-1874. November 1975. p. 107 Draft.

4. Compilation of Air Pollutant Emission Factors. Second Edition with Supplements 1-8. U.S. Environmental Protection Agency, Office of Air Quality Planning and Standards. Publication No. AP-42. Research Triangle Park, North Carolina. August 1977. p. 6.4-2.

5. Evaluation of Compliance Status of Grain Elevators in the State of Minnesota. PEDCo Environmental, Inc. Prepared for the U.S. Environmental Protection Agency, Contract No. 68-02-1321. Task Order No. 8.

6. Shannon, L.J., R.W. Gerstle, P.G. Gorman, D.M. Epp, T.W. Devitt, and R. Amick. Emissions Control in the Grain and Feed Industry. Volume I - Engineering and Cost Study. Midwest Research Institute. Kansas City, Missouri. EPA Contract No. 68-02-0213. Environmental Protection Agency Report EPA-450/3-73-003a. December 1973.

7. Thimsen, D.J. and P.W. Aften. A Proposed Design for Grain Elevator Dust Collection. Journal of the Air Pollution Control Association. 18:738-742, November 1968.

8. Grain Handling and Milling Industry, Background Information for Establishment of National Standards of Performance for New Sources. Environmental Engineering, Inc. EPA Contract No. CPA 70-142. Task Order No. 4. July 15, 1971 Draft. 60 p.

9. Chemical Engineering. Economic Indicators. McGraw-Hill Company. September 10, 1979. p. 1.

10. Op. cit. Reference 8. p. 8-17.

11. Ibid. pp. 6-26 through 6-31.

12. Horzella, T.I. Selecting, Installing and Maintaining Cyclone Dust Collectors. Chemical Engineering. McGraw-Hill Company. January 30, 1078. p. 88.

13. PEDCo Environmental, Inc. Technical Guidance for Control of Industrial Process Fugitive Particulate Emissions. Report No. EPA-450/3-77-010, prepared for the U.S. Environmental Protection Agency. Office of Air and Waste Management. Office of Air Quality Planning and Standards. Control No. 68-02-1375, Task No. 33. Research Triangle Park, North Carolina. March 1977. p. 2-38.

14. Op. cit. Reference 8. p. 1-3.

15. Potential Impact of Emission Controls on Country Elevators. MRI Report. Midwest Research Institute. Prepared for National Grain and Feed Association, Environmental Committee, Washington, D.C. Project No. 3866-C. July 24, 1974. p. 77.

APPENDIX FOR SECTION 2.6

(1) Receiving

Emissions = (0.6 lb/ton)(1 x 10^6 bu/yr)(58 lb/bu)(t/2000 lbs)
= 17,400 lbs/yr

Hopper vented to cyclone

Captial cost = $42,700
Annual cost = 8,700

$$C/B = \frac{\$8,700/yr}{.9\ (17,400) + .9\ (4,350)} = \$0.44/lb$$

Enclosure vented to fabric filter

Capital cost = $72,200
Annual cost = 14,900

$$C/B = \frac{\$14,900}{.99\ (17,400) + .99\ (4,350)} = \$0.69/lb$$

Enclosure

Capital cost = $27,700
Annual cost = 6,100

$$C/B = \frac{\$6,100/yr}{.6\ (17,400)} = \$0.59/lb$$

(2) Transferring and conveying (Handling and weighing)

Emissions = (2.5 lb/ton)(27,000 tpy) = 72,500 lbs/yr

Vent to cyclone

Capital cost = $14,100
Annual cost = 3,000

$$C/B = \frac{\$3,000/yr}{.9\ (72,500)} = \$0.05/lb$$

Vent to fabric filter

Capital cost = $22,100
Annual cost = 4,700

$$C/B = \frac{\$4,700/yr}{.99\ (72,500)} = \$0.07/lb$$

(3) Cleaning (8% cleaned)

Emissions = (3 lb/ton)(29,000 tpy)(.08) = 7,000 lbs/yr

Vent to cyclone

Capital cost = $16,100
Annual cost = 3,400

$$C/B = \frac{\$3,400/yr}{.9\ (7,000)} = \$0.54/lb$$

Vent to fabric filter

Capital cost = $23,900
Annual cost = 6,000

$$C/B = \frac{\$6,000/yr}{.99\ (7,000)} = \$0.86/lb$$

(4) Drying

Rack (10% dried)

Emissions = (4 lbs/ton)(29,000 tpy)(0.1) = 11,600 lbs/yr

Vent to cyclone

Capital cost = $79,000
Annual cost = 22,200

$$C/B = \frac{\$22,200/yr}{.9\ (11,600)} = \$2.13/lb$$

Vacuum screen system (50 mesh)

Capital cost = $35,900
Annual cost = 7,300

$$C/B = \frac{\$7,300/yr}{.93\ (11,600)} = \$0.68/lb$$

Column

No data

(5) Shipping

Emissions = (.50)(0.3)(29,000 tpy) = 4,350 lbs/yr

Truck loading (50% by truck)

Adjustable chutes

See Section 2.1

Vent to cyclone

Capital cost = $42,700
Annual cost = 8,700

$$C/B = \frac{\$8,700/yr}{0.9\ (4,350)} = \$2.22/lb$$

Enclosure vented to fabric filter

Capital cost = $72,200
Annual cost = 14,900

$$C/B = \frac{\$14,900/yr}{.99\ (4,350)} = \$3.46/lb$$

Railcar loading

Emissions = (.50)(0.27)(29,000) = 3,915 lbs/yr

Adjustable chutes

See Section 2.1

Hooding vented to cyclone

Capital cost = $27,000
Annual cost = 5,700

$$C/B = \frac{\$5,700/yr}{.9\ (3,915)} = \$1.62/lb$$

Enclosure to fabric filter

Capital cost = $62,700
Annual cost = 12,500

$$C/B = \frac{\$12,500/yr}{.99\ (3,915)} = \$3.23/lb$$

2.7 IRON FOUNDRIES

2.7.1 Process Description[1-7]

Foundries produce castings for automotive parts, light and heavy machinery, pipe and a wide range of miscellaneous products. The process involves melting scrap metal and/or pig iron (crude iron in the form of blocks weighing about 100 pounds) and pouring the molten metal into prepared molds. The two major categories are "iron" foundries and "steel" foundries. Iron foundries may be further subdivided into "gray iron", "malleable iron" and "ductile iron" foundries. Both iron and steel consist primarily of elemental iron but with differing carbon content. Iron contains 2 to 4 percent carbon, and steel contains 1 percent or less. Iron formulations also incorporate various amounts of other elements. For example, silicon content is generally in the range of 2 to 3 percent in iron formulations.[8] Steel may also contain alloying elements.

Iron foundries may be further classified as either "captive" or "jobbing" foundries. A captive foundry is one that is a regular operating element of a manufacturing establishment and whose castings are generally made for the products of the parent company. In contrast, a jobbing foundry is one that manufactures a variety of castings which are not used in its own products, but are made for the products of other companies.

Figures 2.7-1 and 2.7-2 illustrate the process flow in a typical iron foundry. The basic process flow is essentially the same regardless of whether the foundry is captive or job shop. About 70 percent of the iron melted in the U.S. is produced in a cupola furnace.[9] Cupola capacities range from 1 to 100 tons of molten metal per hour. Over 60 percent operate in the range of 3 to 11 tons per hour. (Figure 2.7-3 illustrates a typical cupola furnace.) The other types of furnaces used in iron foundries are

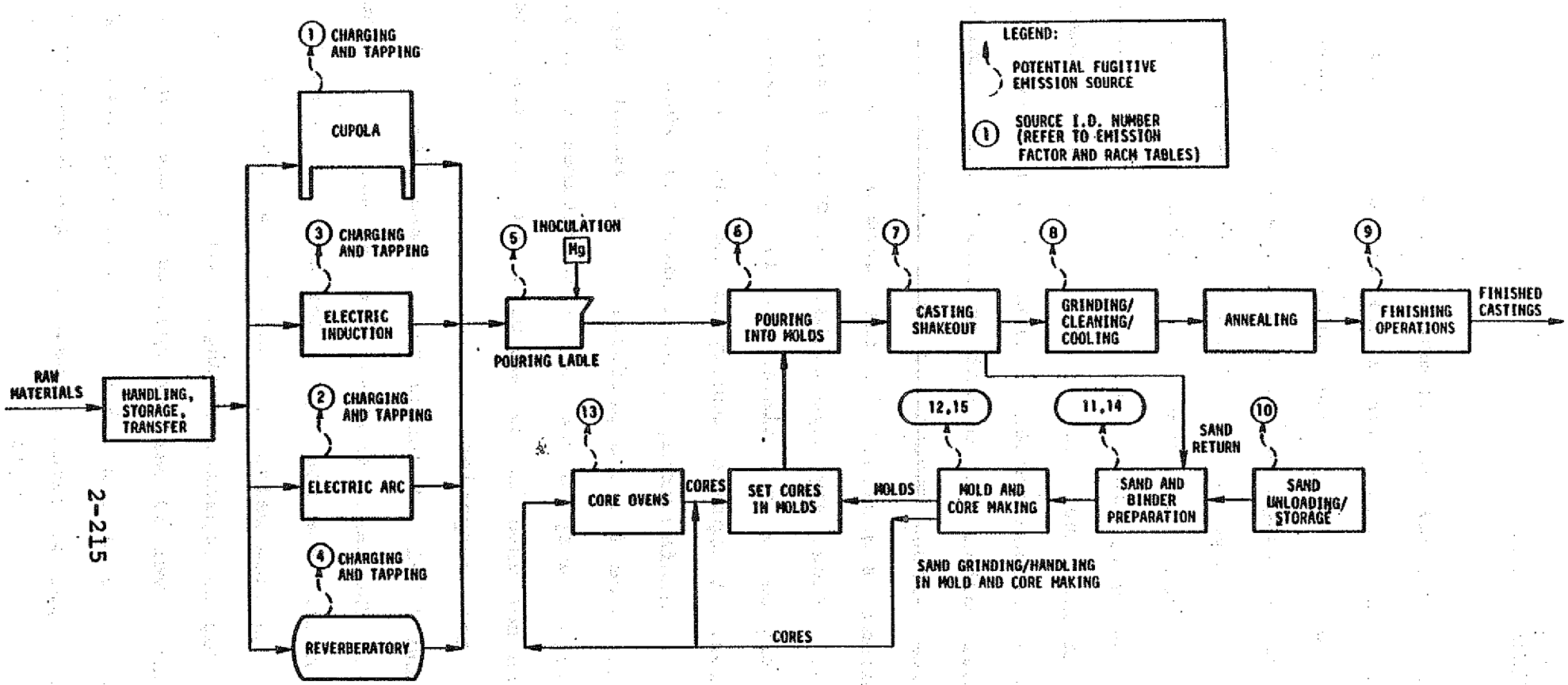

Figure 2.7-1. Simplified process flow diagram for iron foundries and associated fugitive particulate emission sources.

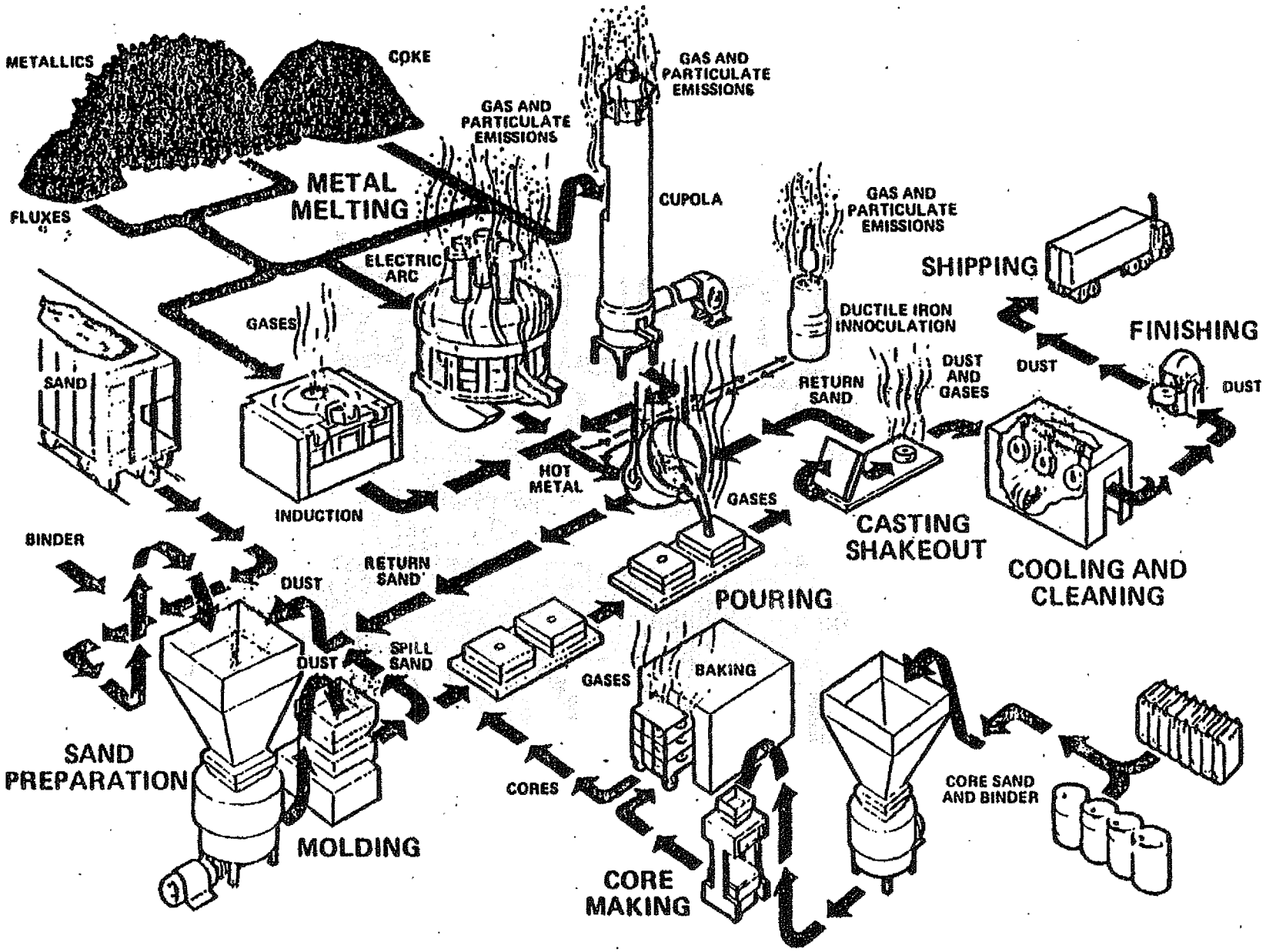

Figure 2.7-2. Iron foundry process flow diagram.[10]

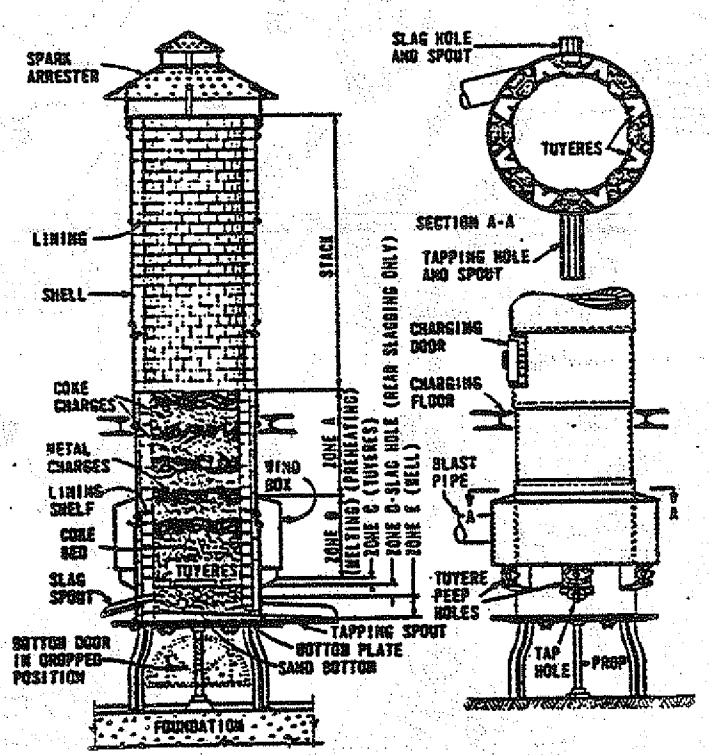

Figure 2.7-3. Cupola furnace.[11]

electric arc, electric induction and reverberatory. (These furnaces are shown in Figures 2.7-4 to 2.7-7.)

Raw materials are charged into the cupola through a door in the top of the furnace. The raw materials consist of iron and/or steel scrap, pig iron, flux materials, ferrosilicon and coke. Fluxes are limestone or similar minerals, that absorb impurities after the charge has melted. Coke is essentially pure carbon in lump form. The burning of the coke provides the heat to melt the raw materials. As the charge melts, it descends to the bottom of the furnace where the molten metal product is drained out periodically. Fresh raw materials are added to keep the furnace full. Operation of cupola furnaces can be done on a continuous basis.

The charge for electic arc, electric induction and reverberatory furnaces consists mainly of iron and/or steel scrap, pig iron and limestone. The reverberatory furnace is heated by firing gas or oil. These furnaces are operated on a batch basis.

The molten metal is tapped from the furnace at a temperature of about 2900°F into a ladle or into a holding furnace until it is ready to be drained into a ladle. The ladle is transported to the mold line, and molten metal is poured into prepared molds. The molds contain the molten iron within the mold form until it solidifies. In production of high strength ("ductile iron") castings, magnesium is added to the molten iron by a process called inoculation. (See Figure 2.7-8 for an illustration of the magnesium treatment methods used to produce ductile iron.) After solidification, the sand molds and castings are separated, and the sand is recycled to the mold making operation. Castings are shaken out of the molds, or the molds are broken away from the castings. When sufficiently

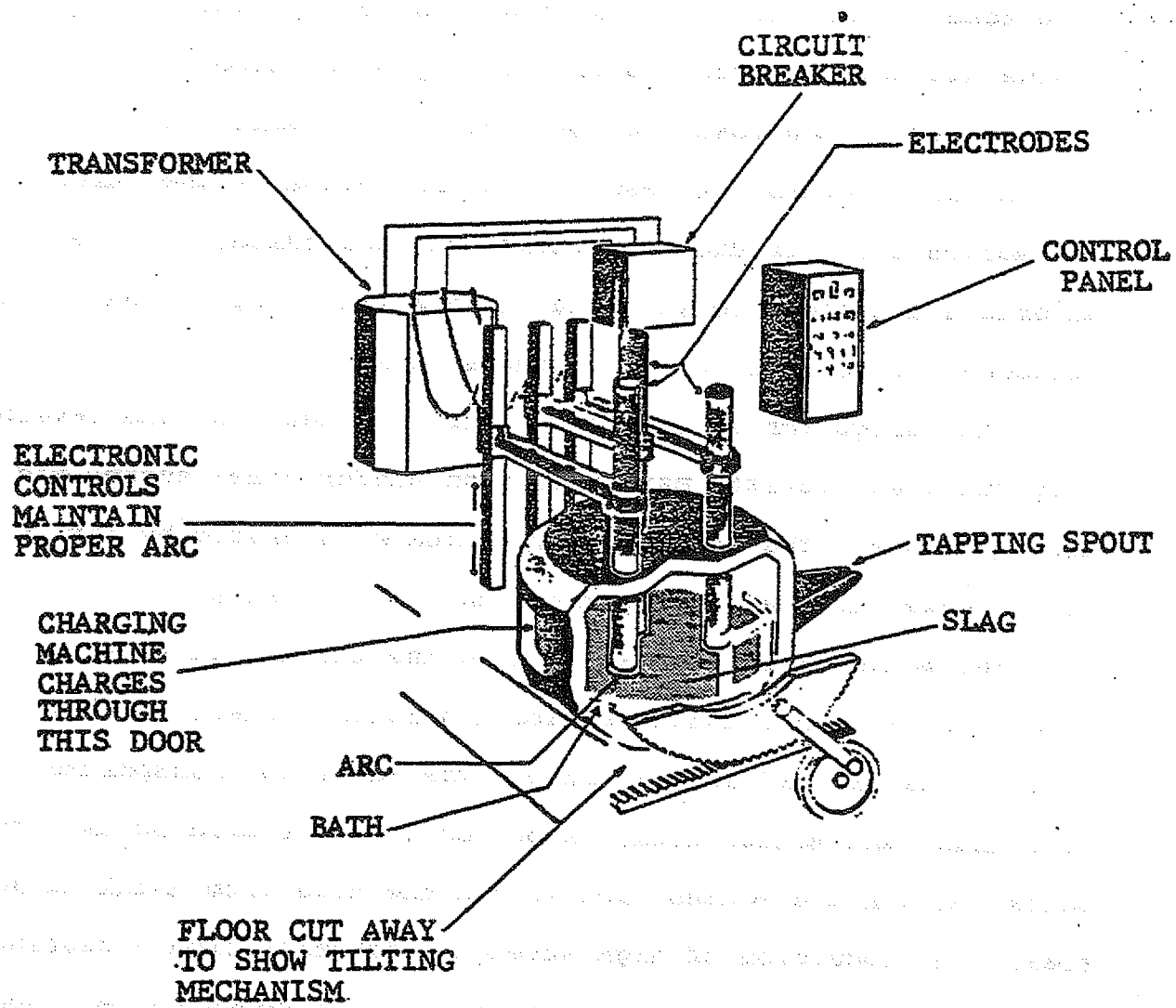

Figure 2.7-4. Electric arc furnace.[12]

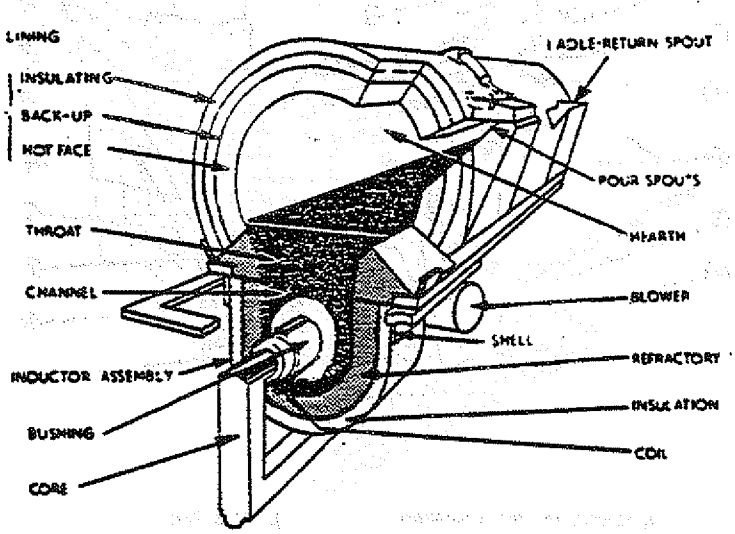

Figure 2.7-5. Channel electric induction furnace.[13]

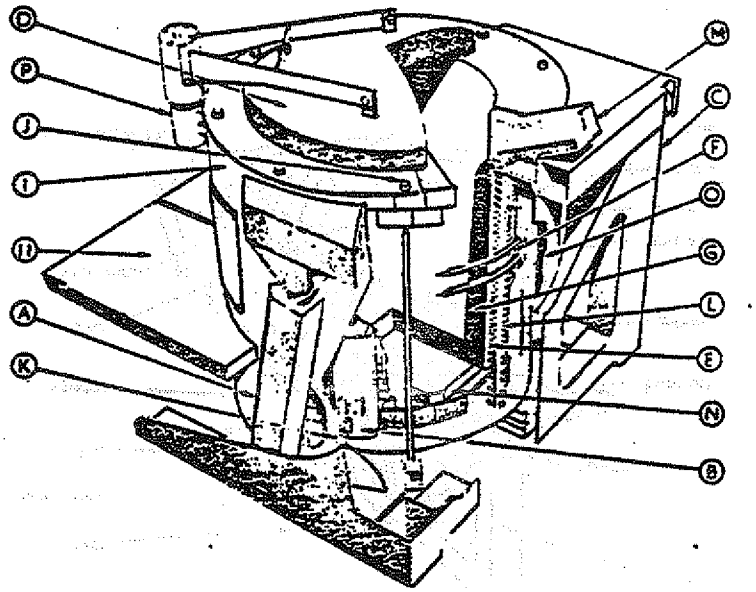

A. HYDRAULIC TILT CYLINDERS
B. SHUNTS
C. STANCHION
D. COVER
E. COIL
F. LEADS
G. WORKING REFRACTORY
H. OPERATOR'S PLATFORM
I. STEEL SHELL
J. TIE RODS
K. CLAMPING BOLTS
L. COIL SUPPORT
M. SPOUT
N. REFRACTORY BRICK
O. ACCESS PORT
P. LID HOIST MECHANISM

Figure 2.7-6. Coreless electric induction furnace.[14]

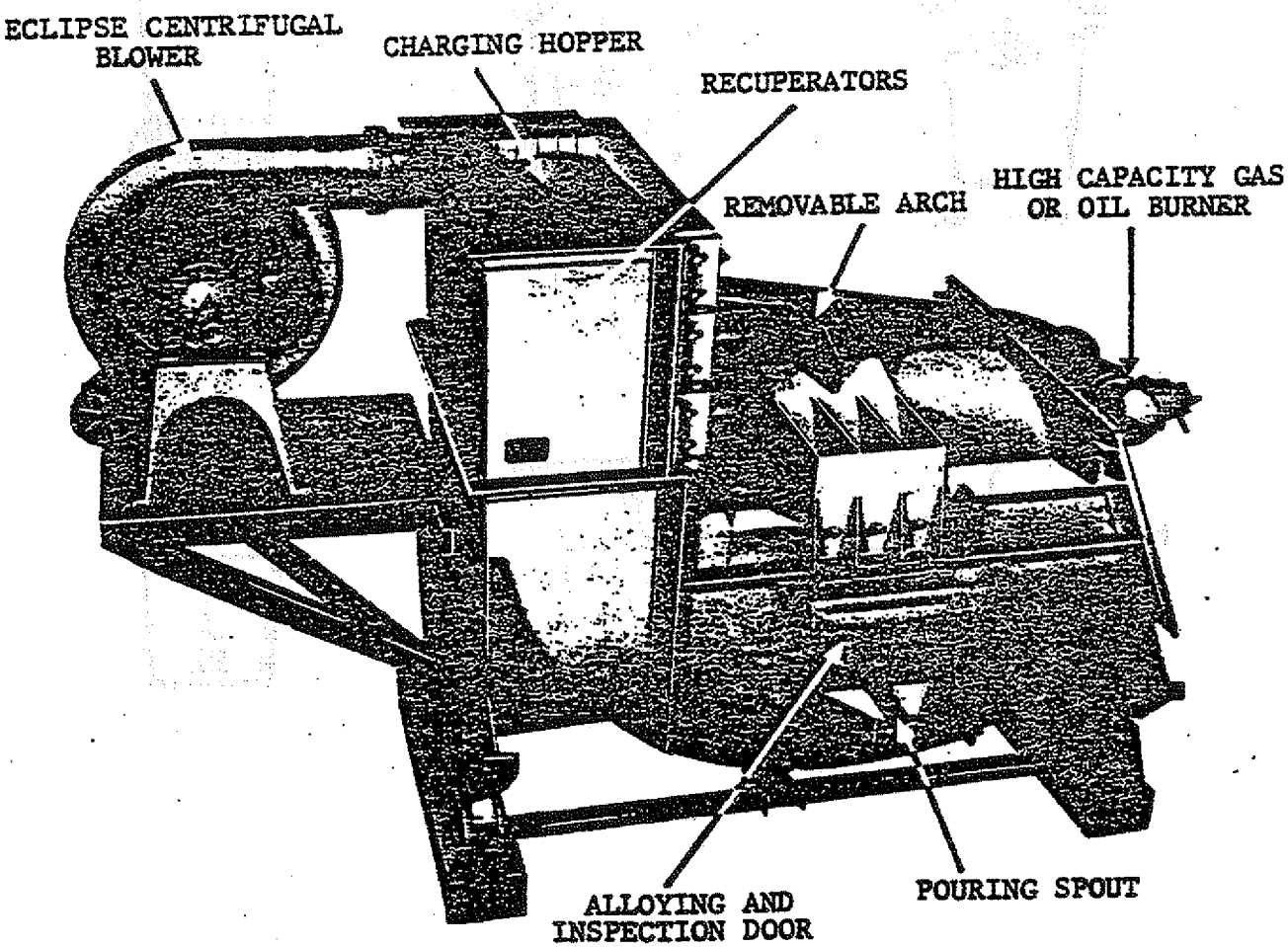

Figure 2.7-7. Reverberatory furnace.[15]

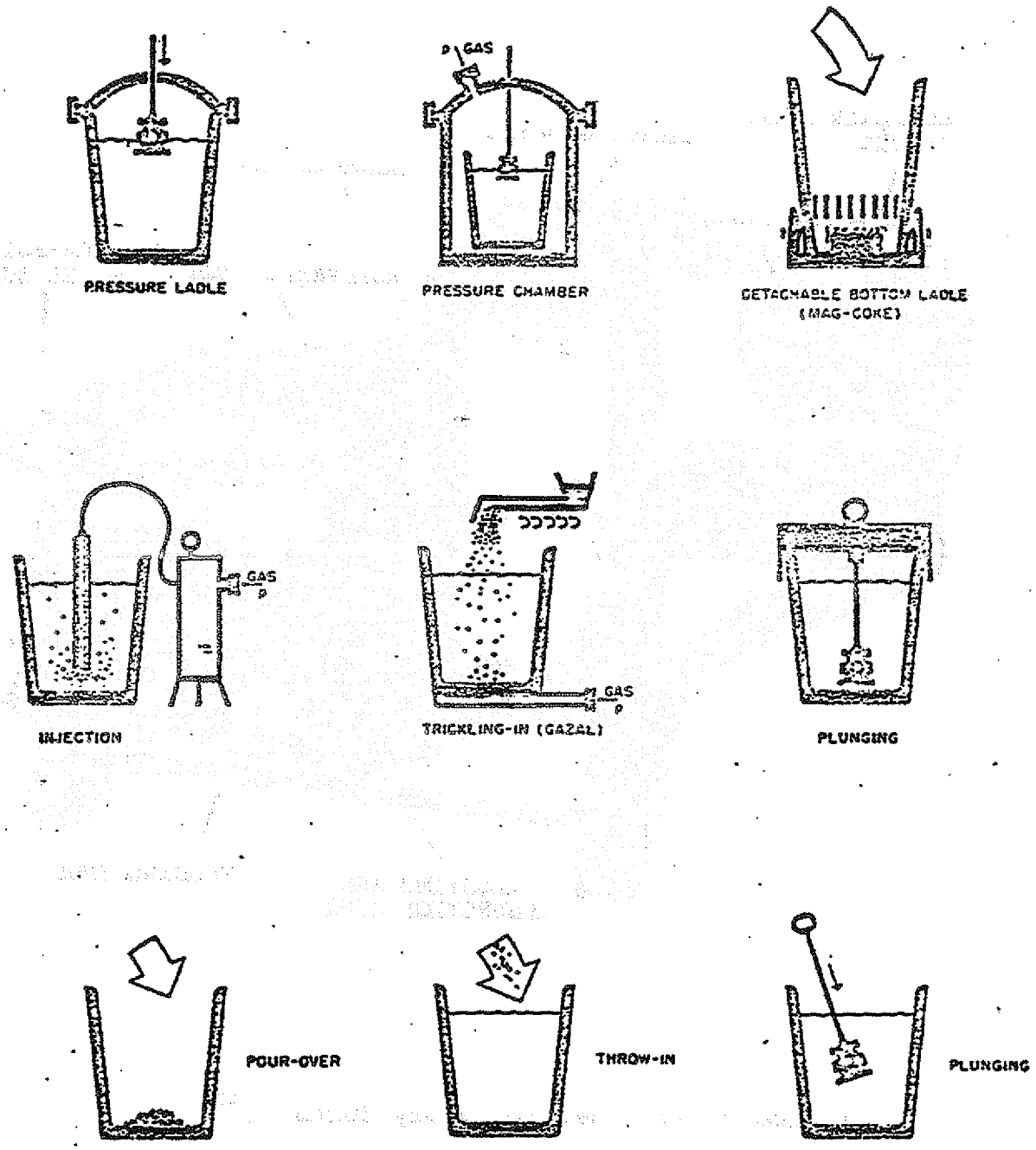

Figure 2.7-8. Magnesium treatment methods for producing ductile iron.[16]

cool, the castings are cleaned by shot blasting, and the remaining excess metal (gates, sprue, risers, flash, etc.) is removed by sawing, grinding, chipping, cutting, etc. These processes are generally housed in an enclosure.

Castings intended for certain uses may be annealed (heat treated) for several hours at temperatures of 1000 to 1600°F. Heat treating furnaces, fired by gas, oil or electricity, are referred to by such names as "annealing", "hardening", "car-bottom" and "traveling hearth" furnaces. Castings that have been annealed in the present of sufficient silicon are referred to as malleable iron castings. Some ductile iron castings, which are produced by inoculating the melt with a small amount of magnesium just prior to casting, are also often subjected to annealing. Finishing operations such as shot or sand blasting, grinding and surface coating may follow the heat treatment.

Production of molds and cores is an integral part of the foundry operation. A mold is made of sand mixed in a muller (see Figure 2.7-9) with water and binders, such as clay or resins. Pitch is sometimes added to the mold mixture primarily to prevent surface defects on the castings. A core is a separable part of the mold used to form a cavity in the casting. Cores are also made of sand and binders. Cores may be produced by any one of a number of processes including hot box, cold box, air set, shell and oil-sand methods.[17] In the oil-sand process, after the cores are formed in the desired shape, they are cured either in a baking oven (core oven) at 300-500°F or at room temperature. Curing evaporates moisture and hardens the sand mixture. Core ovens are fired with gas or oil.

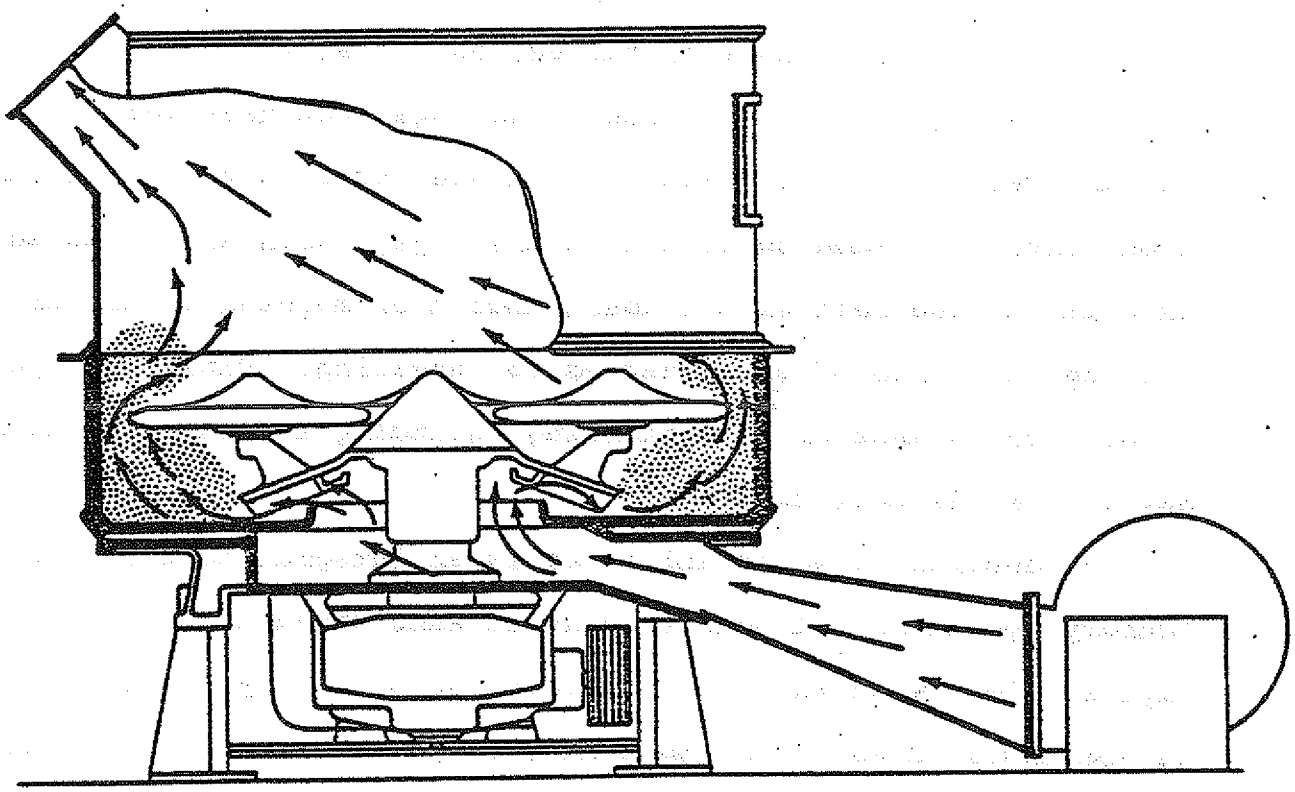

Figure 2.7-9. Sand muller.[18]

The potential sources of fugitive emissions in iron foundries include raw material receiving, storage and handling, melting furnace charging and tapping, iron inoculation, molten iron transporting and pouring, casting, shakeout, cooling, cleaning and finishing, and core and mold making. Each of these sources is identified in Figures 2.7-1 and 2.7-2.

2.7.2 Fugitive Dust Emission Factors

The estimated emission factors for iron foundry fugitive particulate sources are summarized in Table 2.7-1. Most of these emissions factors are based on "engineering judgment" (source's terminology) and very sparse test data. They should be considered of poor reliability. Emission factors were not included for coke handling and storage at iron foundries. These factors are discussed in Section 2.2.2-2. Factors are also not included for raw material handling, storage and transfer operations due to a lack of data. These sources are deemed to be insignificant as far as steel/iron scrap is concerned.

The emission factors for charging and tapping of the various furnace types, with the exception of electric induction furnaces, were derived by assuming a percentage of total furnace emissions. The emission factor for electric induction furnaces represents total furnace emissions including charging and tapping emissions. No test data were available; and, therefore, these factors are unconfirmed and have a very poor reliability rating.

The other emission factors are based upon very sparse test data and the source's engineering judgment. The reliability rating for these factors is also very poor.

TABLE 2.7-1. FUGITIVE DUST EMISSION FACTORS FOR IRON FOUNDRIES

	Source	Emission factor	Reliability Rating	Reference
1	Cupola furnace charging and tapping	0.1 to 2.0 lb/ton iron produced	E	1
2	Electric arc furnace charging and tapping	0.7 lb/ton iron charged[a] 1.4 lbs/ton iron charged[b]	E	19
3	Electric induction furnace melting, charging and tapping	1.5 lb/ton iron produced	E	1
4	Reverberatory furnace charging and tapping	0.1 lb/ton iron produced	E	3
5	Ductile iron inoculation	3.3 to 4.5 lb/ton iron produced	D	4,5
6	Pouring molten metal into molds	0.1 to 4.13 lb/ton iron produced	D	4,6
7	Casting shakeout	1.2 to 12.8 lb/ton iron produced	E	4,7
8	Cooling and cleaning castings	0.16 to 0.8 lb/ton castings produced	D	4,7
9	Finishing castings	0.01 lb/ton castings produced	E	7
10	Core and mold sand unloading and storage:			
	mechanical handling	0.03 lb/ton sand unloaded[c]	E	20
	pneumatic handling	NA		
11	Core sand and binder mixing	0.3 lb/ton sand mixed	E	2
		or		
		0.75 to 8.24 lb/ton iron produced	E	4,7
12	Core making	0.35 lb/ton cores produced	E	2
13	Core baking	0.03 to 5.4 lb/ton cores baked	E	7,9,20
14	Mold sand preparation	1.3 lb/ton castings produced	E	4
15	Mold making	0.04 lb/ton castings produced	E	7

NA = Not available
[a]With no alloying in the ladle.
[b]With alloying in the ladle.
[c]Sand unloading emission factor is assumed to be equivalent to the taconite pellets unloading emission factor as presented in Section 2.1.3. Fugitive dust emissions from storage are estimated to be negligible since sand is normally stored indoors.

2.7.2 Particle Characterization[21]

The composition and particle size of dusts from various foundry operations will vary considerably. For example, dusts from a casting shakeout are mostly very fine carbonaceous material. On the other hand, dust from the grinding of castings contains coarse, freshly fractured particles, along with elemental iron, iron oxide and sand particles. Table 2.7-2 indicates the characteristics and sources of emissions in various foundry operations.

Much of the information available on particle characteristics is for the stack (non-fugitive) emissions from cupola and electric arc furnaces. However, since such information may be of value in approximating the particle characteristics of fugitive dust emission sources such as furnace charging, tapping and leaks, it is presented in this section.

The range of chemical composition of stack emission components in cupola dust has been reported in the literature as shown in Table 2.7-3. Table 2.7-3 indicates that oxides of iron and silicon and combustible materials form a high proportion of cupola dust.

Particle size distribution studies have been performed for stack emissions from cupola furnaces. The data reported in two major studies is shown in Tables 2.7-4 and 2.7-5. There is very little information in the literature on whether or not a relationship exists between particle size distribution and chemical composition of cupola emissions. One source conjectures that a high percentage of less than 5 micron particles is generally observed with substantial percentages of metallic oxides. On the other hand, a high percentage of greater than 4.4 micron particles corresponds to significant amounts of silicon oxides from foundry returns, dirty scrap and combustible materials.[27]

TABLE 2.7-2. PARTICULATE EMISSION CHARACTERISTICS FOR VARIOUS FOUNDRY OPERATIONS[22]

FOUNDRY OPERATION	TYPE	PARTICLE SIZE (μm)
Raw material storage and charge makeup:		
Store metal scrap, coke, limestone, dolomite, fluorspar, silica sand	Coke dust Limestone and sand dust	Fine to coarse 30 to 1,000
Centrifuge or heat metal borings and turnings to remove cutting oil	Oil vapors Smoke Unburned hydrocarbons	.03 to 1 .01 to .4
Weigh charge materials	Coke dust Limestone dust	Fine to coarse 30 to 1,000
Melting:		
Cupola furnace	Fly ash Coke breeze Smoke Metallic oxides Oil Vapors	8 to 20 Fine to coarse .01 to .4 Up to .7 .03 to 1
Electric arc melting	Smoke Metallic oxides Oil vapors	.01 to .4 Up to .7 .03 to 1
Induction furnace	Oil vapors	
Reverberatory (air) furnace	Smoke Oil vapors Metallic oxides Fly ash	.01 to .4 .03 to 1 Up to .7 8 to 20
Furnace charge preheating or drying	Smoke Oil vapors Metallic oxides Metallic oxides	.01 to .4 .03 to 1 75% - 5 to 60 (bottom fired) 0 to 20 (top fired)
Holding furnaces	Iron oxide Oil vapor	Fine to medium .03 to 1
Duplexing furnaces	Oil vapor Metallic oxides	.03 to 1 Up to .7
Inoculation	Metal oxides	Up to .7
Molding, pouring and shakeout:		
Molding	Sand Dust	Coarse

TABLE 2.7-2. CONTINUED

FOUNDRY OPERATION	TYPE	PARTICLE SIZE (um)
Pouring:		
Gray and ductile iron Malleable	Core gases Facing fumes Metallic oxides Fluoride fumes Magnesium oxide fumes Synthetic binder smoke and fumes	 Fine to medium 0.1 to .4
Shakeout	Sand fines Smoke Dust	50% - 2 to 15 .01 to .4 50% - 2 to 15
Cleaning and finishing:		
Abrasive cleaning	Dust	50% - 2 to 15
Grinding	Metal dust Sand fines Abrasives Wheel bond material Vitrified resins	Above 7 Fine to medium 50% - 2 to 7 Fine 50% - 2 to 15
Annealing and heat treating	Oil vapors	.03 to 1
Sand conditioning:		
New sand storage Sand handling system Screening	Fines Fines Fines	50% - 2 to 15 50% - 2 to 15 50% - 2 to 15
Mixing	Fines Flour Bentonites Sea coal Cellulose	50% - 2 to 15 Fine to medium Fine to medium Fine to medium Fine to medium
Drying and reclamation	Dust Oil vapors	50% - 7 to 15 .03 to 1
Sand storage	Sand fines Flour Binders	Fine 50% - 7 to 15
Core making	Sand fines Dust	Fine to medium Fine to medium
Baking	Vapors Smoke	

TABLE 2.7-3. CHEMICAL COMPOSITION OF CUPOLA DUST[23]

Component	% by Weight	
	Mean Range	Scatter Values
SiO_2	20-40	10-45
CaO	3-6	2-18
Al_2O_3	2-4	0.5-25
MgO	1-3	0.5-5
FeO (Fe_2O_3, FE)	12-16	5-26
MnO	1-2	0.5-9
Ignition Loss (C,S,CO_2)	20-50	10-64

TABLE 2.7-4. PARTICLE SIZE DISTRIBUTION OF DUST EMISSIONS FROM BOTH COLD AND HOT BLAST CUPOLA FURNACE STACKS[24]

Particle Size (μm)	Cumulative Percent by Weight for Indicated Particle Diameter	
	Cold Blast	Hot Blast (acid)[a]
< 1000	90-100	95-100
< 500	80-90	90-100
< 200	60-80	65-95
< 100	40-65	40-80
< 50	20-50	30-60
< 20	10-30	20-40
< 10	5-25	15-35
< 5	2-20	10-30
< 2	up to 15	5-20

[a] Cupola supplied with a preheated air blast and where slag is formed due to acid constituents originating from the furnace lining.

TABLE 2.7-5. SIZE DISTRIBUTION FOR PARTICULATE EMISSIONS FROM EIGHTEEN CUPOLA FURNACE INSTALLATIONS[25]

Particle Size (μm)	Cumulative Percent by Weight for Indicated Particle Diameter
< 2	14
< 5	24
< 10	34
< 20	44
< 50	61
< 100	78
< 200	93

Chemical composition or particulate emissions from electric arc furnaces at three iron foundries has been reported in one literature source and is shown in Table 2.7-6. The main components in these emissions were iron oxide and silicon dioxide, while substantial amounts of oxides of manganese, aluminum and magnesium were found. The emissions consist almost entirely of the oxides of various metals charged, with lesser amounts of furnace refractories and fluxing materials which were used.[28]

TABLE 2.7-6. CHEMICAL ANALYSIS OF PARTICULATE EMISSIONS FROM AN ELECTRIC ARC FURNACE[26]

Constituent	Proportion of Total Particulate, Weight Percent		
	Foundry A	Foundry B	Foundry C
Iron oxide	75-85	75-85	75-85
Silicon dioxide	10	10	10
Magnesium oxide	2	0.8	1
Manganese oxide	2	2	2
Lead oxide	1	2	0.5
Alumina	0.5	1	0.5
Calcium oxide	0.3	0.2	0.8
Zinc oxide	0.2	2	0.3
Copper oxide	0.04	0.03	0.01
Lithium oxide	0.03	0.03	0.03
Tin oxide	0.03	0.3	0.02
Nickel oxide	0.02	0.03	0.01
Chromium oxide	0.02	0.07	0.01
Barium oxide	0.02	0.07	0.01

Particle size distributions of particulate emissions have also been determined for electric arc furnaces at three foundries. These distributions are shown in Table 2.7-7. It is reported that particu late emissions from electric arc furnace melting and refining are quite small in diameter. Table 2.7-7, which indicates that 80 percent of the emissions have a particle diameter smaller than 5 microns, confirms this conclusion. A second literature reference indicates that 90 to 95 percent of the fumes from electric arc furnaces are below 0.5 microns in size.[29] Another literature source reports that 75 percent of the particulates are less than 5 microns in diameter with a mass median diameter between 2.27 and 2.33 μm.[30]

TABLE 2.7-7. PARTICLE-SIZE DISTRIBUTION FOR PARTICULATE EMISSIONS FROM THREE ELECTRIC-ARC-FURNACE INSTALLATIONS[31]

	Cumulative Percent by Weight for Indicated Particle Diameter		
Particle Size (μm)	Foundry A	Foundry B	Foundry C
< 1	5	8	18
< 2	15	54	61
< 5	28	80	84
< 10	41	89	91
< 15	55	93	94
< 20	68	96	96
< 50	98	99	99

The chemical composition and particle size distributions of particulate emissions from both cupolas and electric arc furnaces are highly variable and are dependent on a number of factors. One literature source concludes that the type of cupola emissions are more affected by the quantity and quality of charge materials, and that the nature and cleanliness of the charged materials are the most important factors in determining the type of emission from electric arc furnaces.[32]

2.7.4 Control Methods

Raw material handling, storage and transfer operations as such are not addressed here but are discussed in Section 2.2 for coke and limestone. These operations for the iron and steel scrap are assumed to be low emission sources, and no control is recommended.

Reduction of emissions from melting operations is enhanced when clean scrap is used in the raw charge. Clean materials that are essentially devoid of dirt, oil or grease carry no extraneous burden into and through the furnace. Use of clean scrap, or the pre-cleaning of dirty scrap before use, are useful and appropriate measures worthy of consideration and adjunctive to and supportive of other control measures. However, it has been reported that the pre-cleaning of dirty scrap is not economically feasible.[33]

Charging and tapping emissions from the cupola may be controlled by hooding the charging and tapping areas and venting the system to fabric filters or scrubbers. Another system that may be used is building evacuation and venting to a fabric filter. Proper sizing of the primary control system to maintain continuous draft through the charging door will help alleviate fugitive emissions.[13] Cupolas with above or below charge takeoffs can maintain a strong in-draft through the charge door and eliminate the escape of fugitive emissions.

Typical control devices used for electric arc or electric induction furnaces include a localized, fixed capture hood and a fabric filter or wet scrubber. The design air volume required to ventilate an electric arc furnace with an integral hood is approximately 2,500 cfm per ton of charge.[7,34] This level of ventilation should provide effective capture of charging and tapping emissions.

Newer furnaces can utilize the above system, canopy hoods (roof mounted hoods) or direct shell evacuation.[30] The latter two control measures may not be feasible on older furnaces due to space and design constraints.

Generally, control measures for charging, melting and tapping emissions from reverberatory furnaces have not been required because of their relatively low emission rates.[35] However, collection of charging and tapping emissions, as well as furnace emissions (if no stack discharge) is technically feasible thru the use of localized hooding or building evacuation with exhaust to a fabric filter or electrostatic precipitator. Such control measures may have to be implemented especially for reverberatory furnaces that are or will be using pulverized coal.

Technically feasible methods for capturing fugitive dusts from all furnace operations include building evacuation or local exhaust systems. (See Figures 2.7-10 and 2.7-11 for examples.) Building evacuation to a collection device can control emissions from all sources in a foundry such as casting shakeout, cooling, cleaning and finishing. (One source reports that the use of building evacuation or general dilution ventilation systems without separate primary emission capture is unlikely to provide a sufficient degree of control for airborne contaminants in most foundries to meet OSHA's permissible exposure limits for such contaminants.[33]) On the other hand, local exhaust control systems generally serve specific sources. Because of the large exhaust volumes and attendant high operating and capital costs for total building evacuation systems, the local exhaust methods are usually favored.

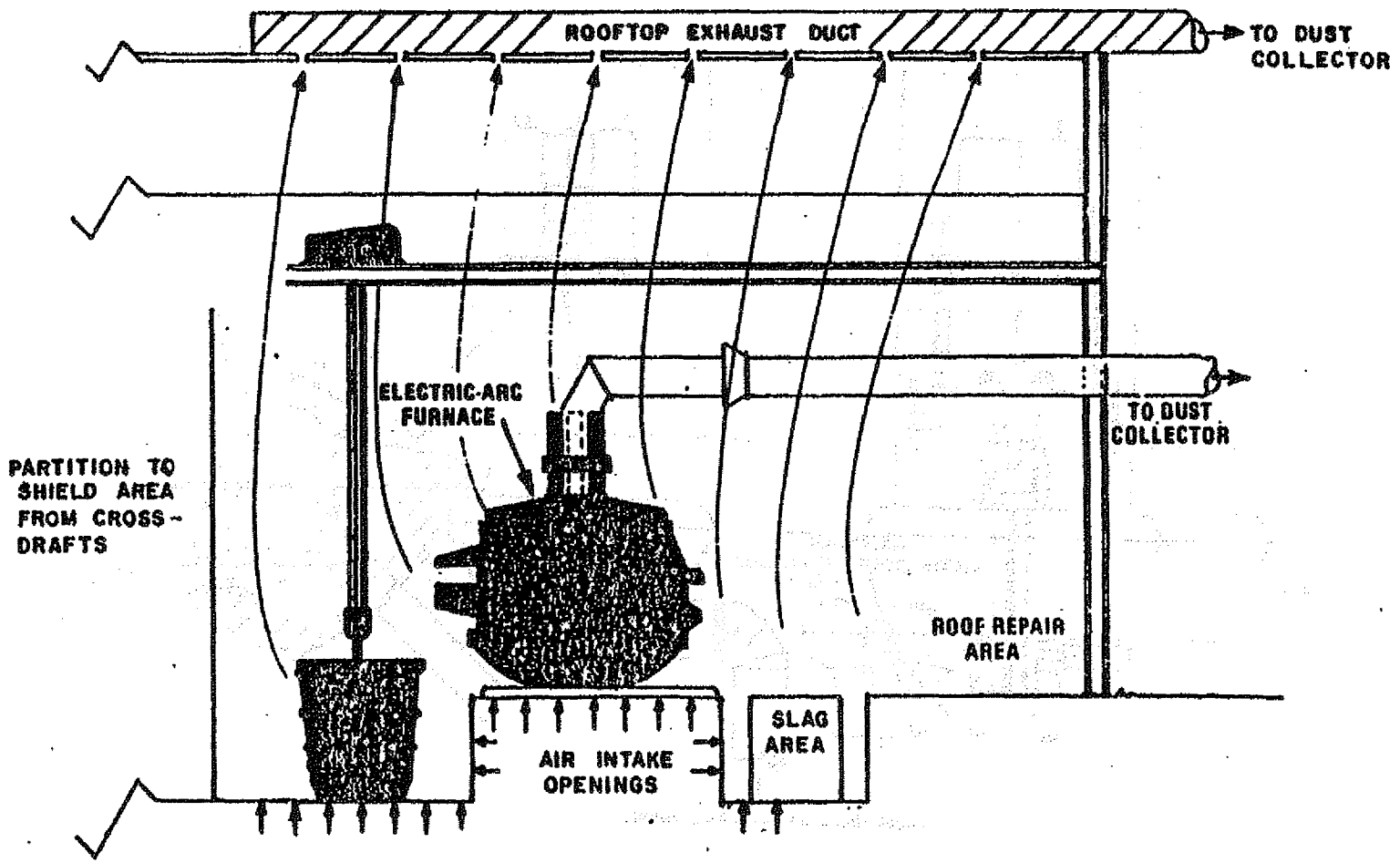

Figure 2.7-10. Building evacuation system.[36]

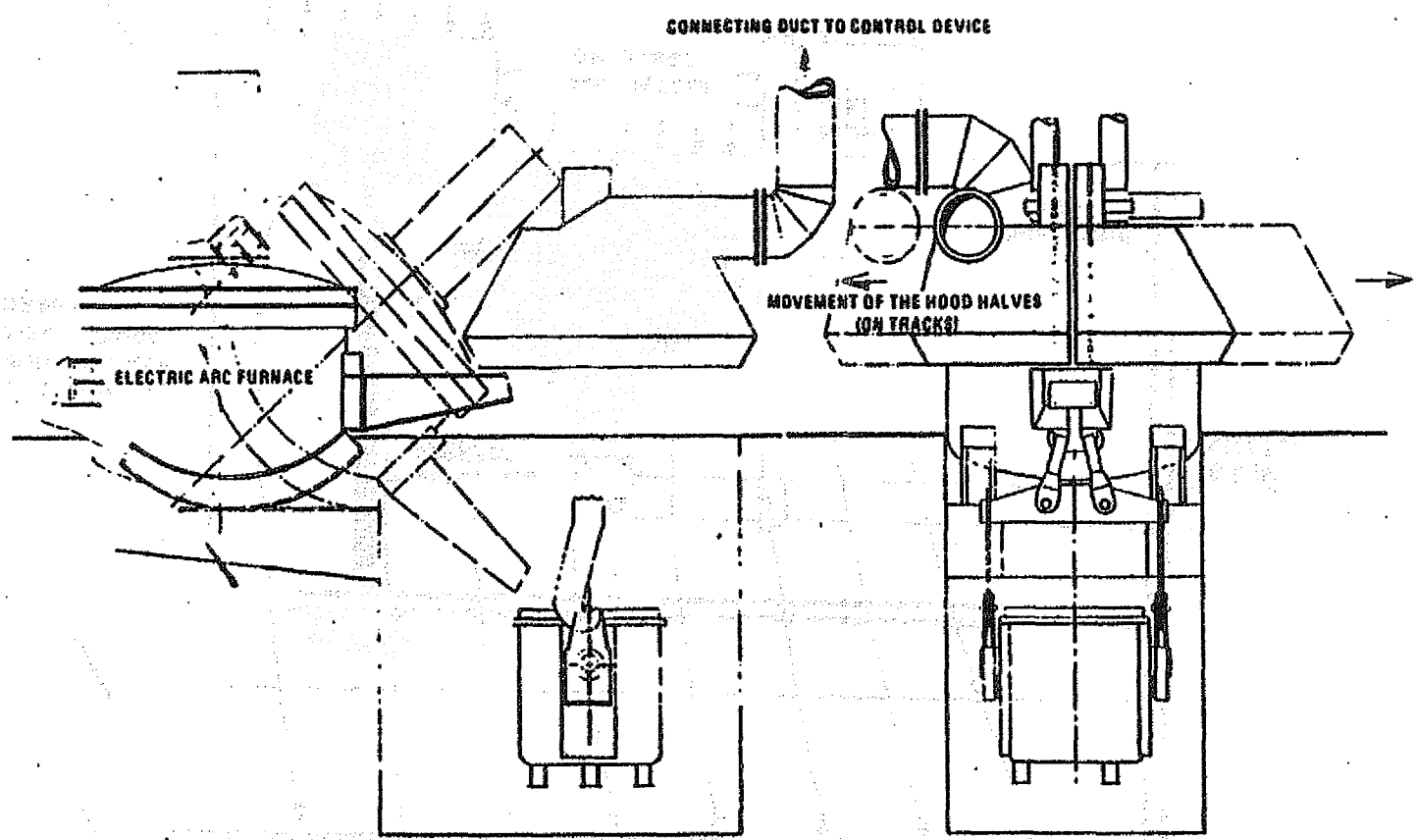

Figure 2.7-11. Mobile tapping hoods.[37]

In recent years, ductile iron inoculation stations have been equipped with collecting hoods or have been installed in enclosed rooms. The evolved gases are exhausted to a dust collection unit. Medium energy wet scrubbers and fabric filters have been used for dust collection.[38]

A side draft hood is often provided for the pouring area, and the mold cooling conveyor between the pouring and shakeout areas is often fully hooded with sheet metal. Also, the use of hooding as illustrated in Figure 2.7-12 is another successful system for capturing emissions from pouring and mold cooling. In this system, air is blown downward from the upper edge of the hood along with the pouring and mold cooling emissions. A variation of this system consists of utilizing an incoming draft from a floor grating rather than from the front edge of the hood. For smaller foundries, a movable pouring hood as shown in Figure 2.7-13 may be effective.[40] In practice, pouring and mold cooling emissions, especially for smaller production and jobbing foundries with non-fixed pouring and cooling locations, are usually exhausted directly to the atmosphere without control.[41] If control measures are deemed necessary, the hoods may be vented to wet scrubbers.

Fugitive dust emissions from the shakeout area are usually collected via a side or bottom draft hood or a partial enclosure. Duct systems from the shakeout usually lead to a single control device, frequently a wet scrubber or fabric filter. Figure 2.7-14 illustrates a shakeout with an enclosure vented to a wet scrubber.

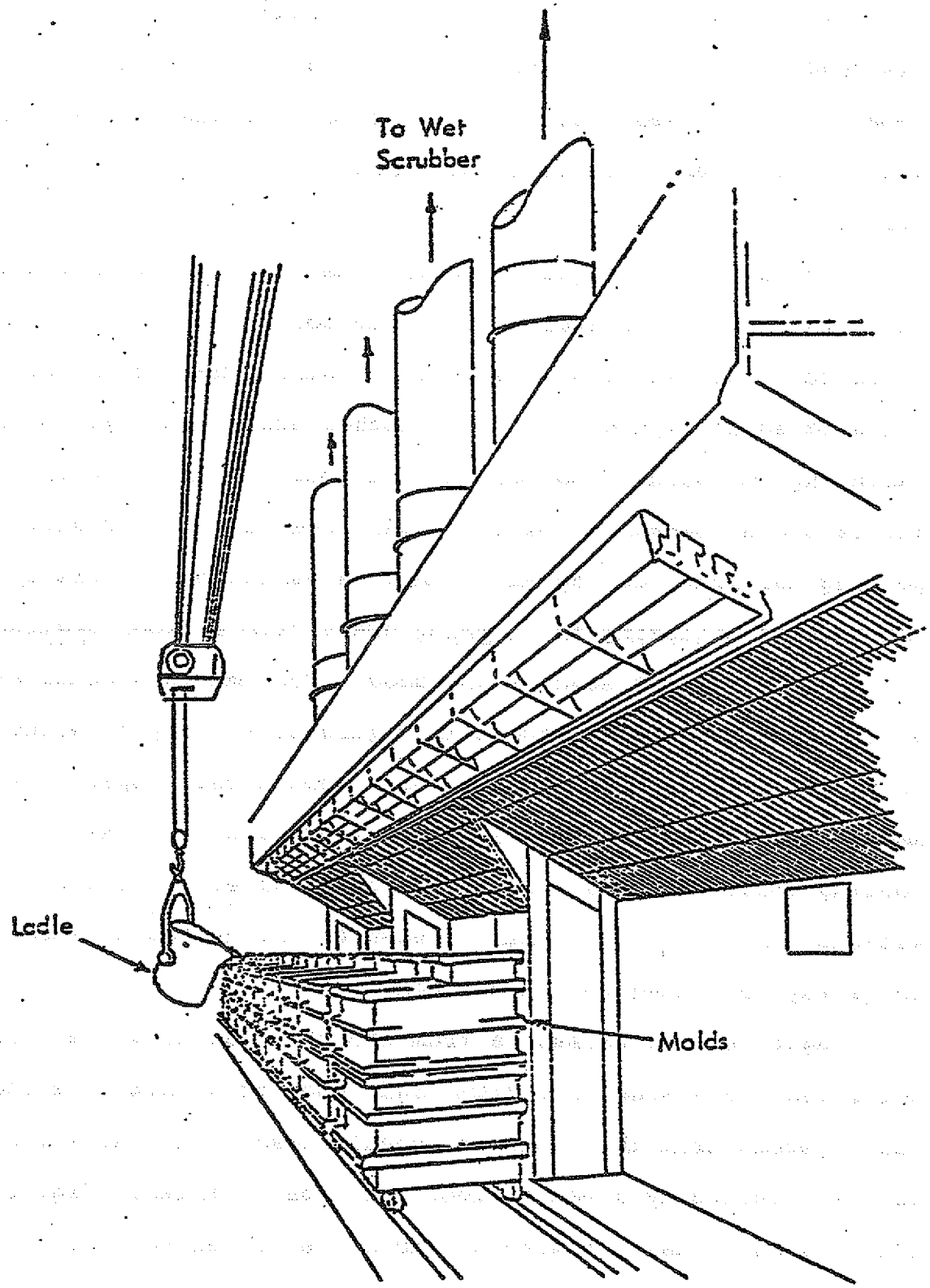

Figure 2.7-12. Hooded pouring station.[39]

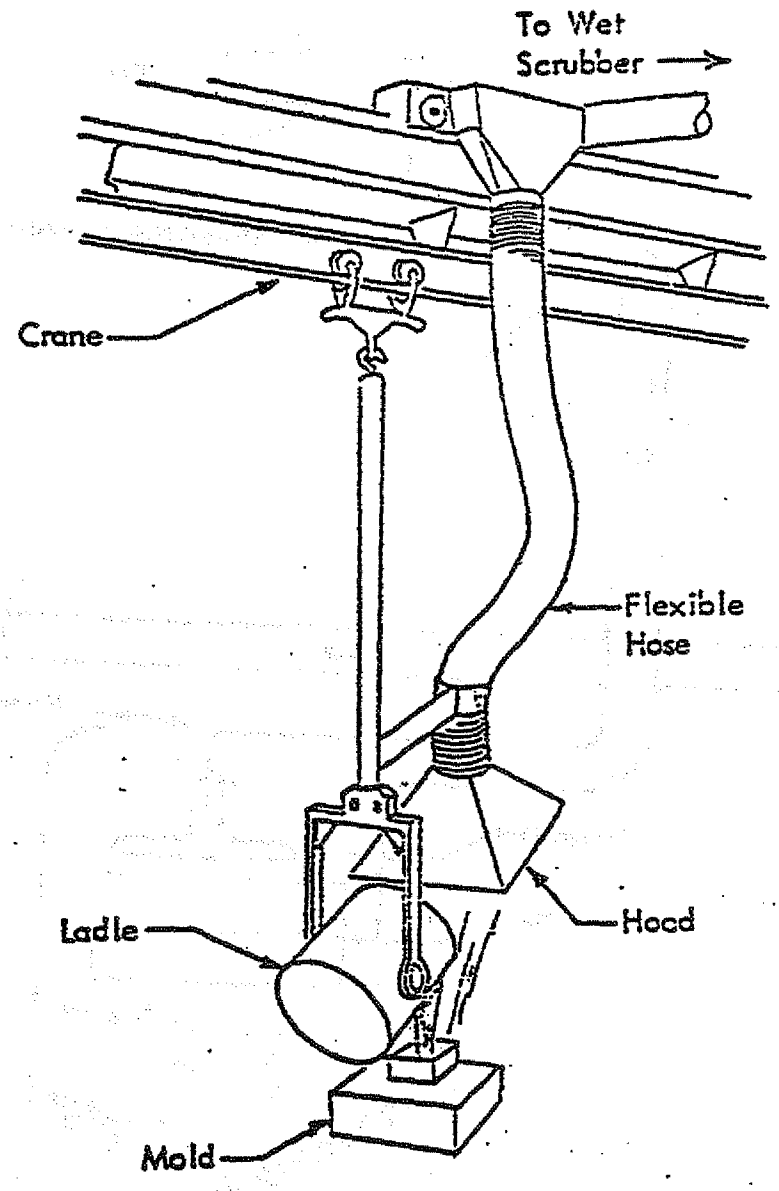

Figure 2.7-13. Movable pouring hood.[42]

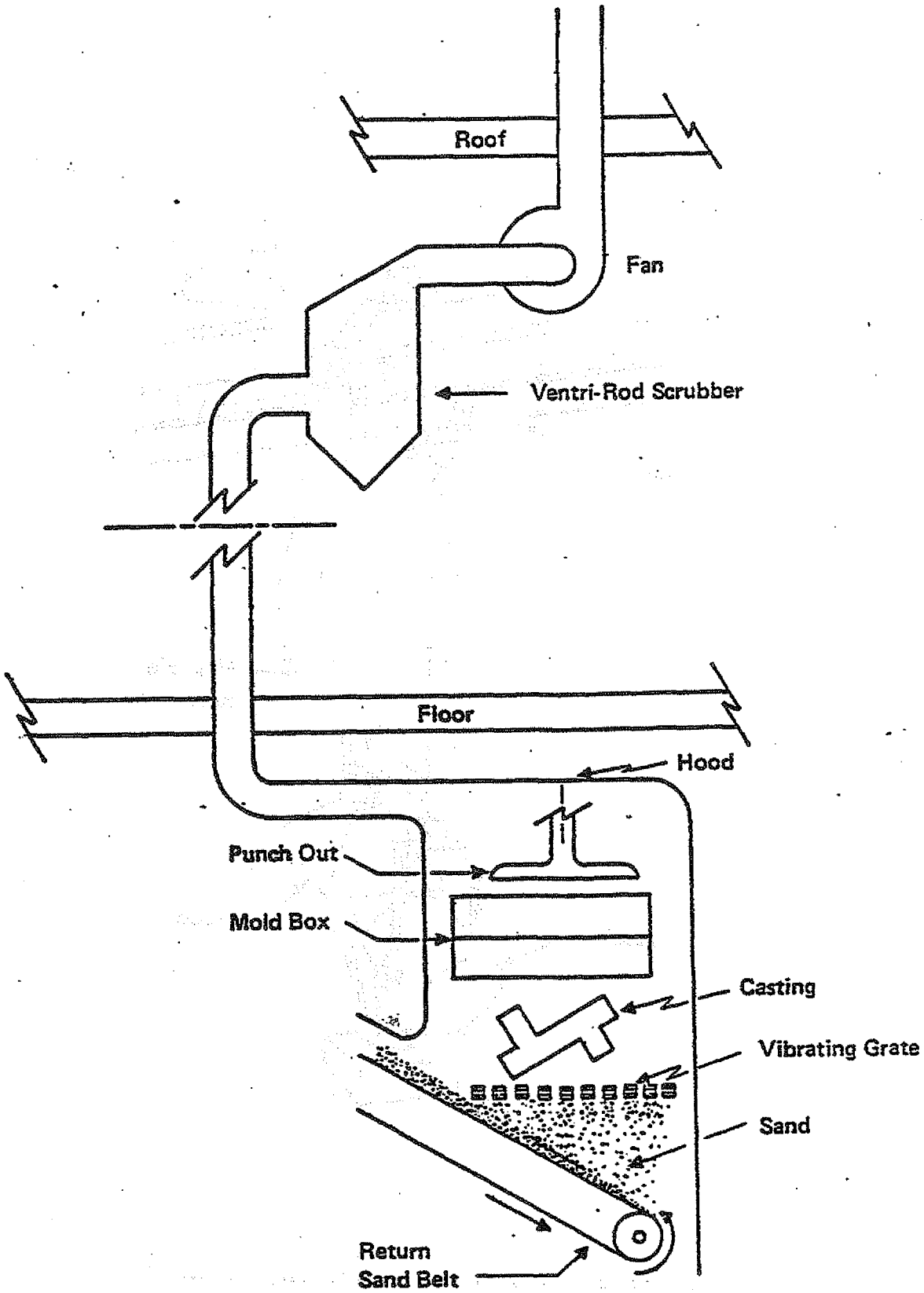

Figure 2.7-14. A casting shakeout control system.[43]

Particulate emissions from cleaning and finishing operations may be captured by local exhaust systems connected to either dry mechanical collectors (i.e., cyclones), fabric filters or wet collectors. Particulate emissions from abrasive shot blasting and tumble cleaners is commonly controlled by fabric filters or medium energy wet collectors. Dry mechanical collectors are also used at abrasive cleaning processes. Grinding operations are normally provided with local exhaust hoods connected to either high efficiency centrifugal collectors (multiple cyclones) or fabric filters.[44]

Coremaking effluents consist primarily of the gases emitted from the cold box, hot box, bake ovens and shell core machines and are usually exhausted to the atmosphere through a ventilation system or are passed through an odor scrubber before venting to the atmosphere.[44] Core ovens, when operated below 400°F and fired with natural gas, do not generally require air pollution control equipment and may be vented directly to the atmosphere. Emissions can be reduced by modifying the composition of the core binders and lowering the baking temperature.[45]

Medium energy wet collectors are best suited for moist sand preparation and handling. When dry sand conditions exist, fabric filters are occasionally used. Often some type of hood is used to capture emissions in sand conveyor systems especially at transfer points. As with many other processes, ductwork and exhaust fans are required in a complete collection system.[44] (Figure 2.7-15 illustrates the capture design on a typical sand-handling system.)

Table 2.7-8 summarizes the available control techniques, their effectiveness, estimated costs and RACM selections.

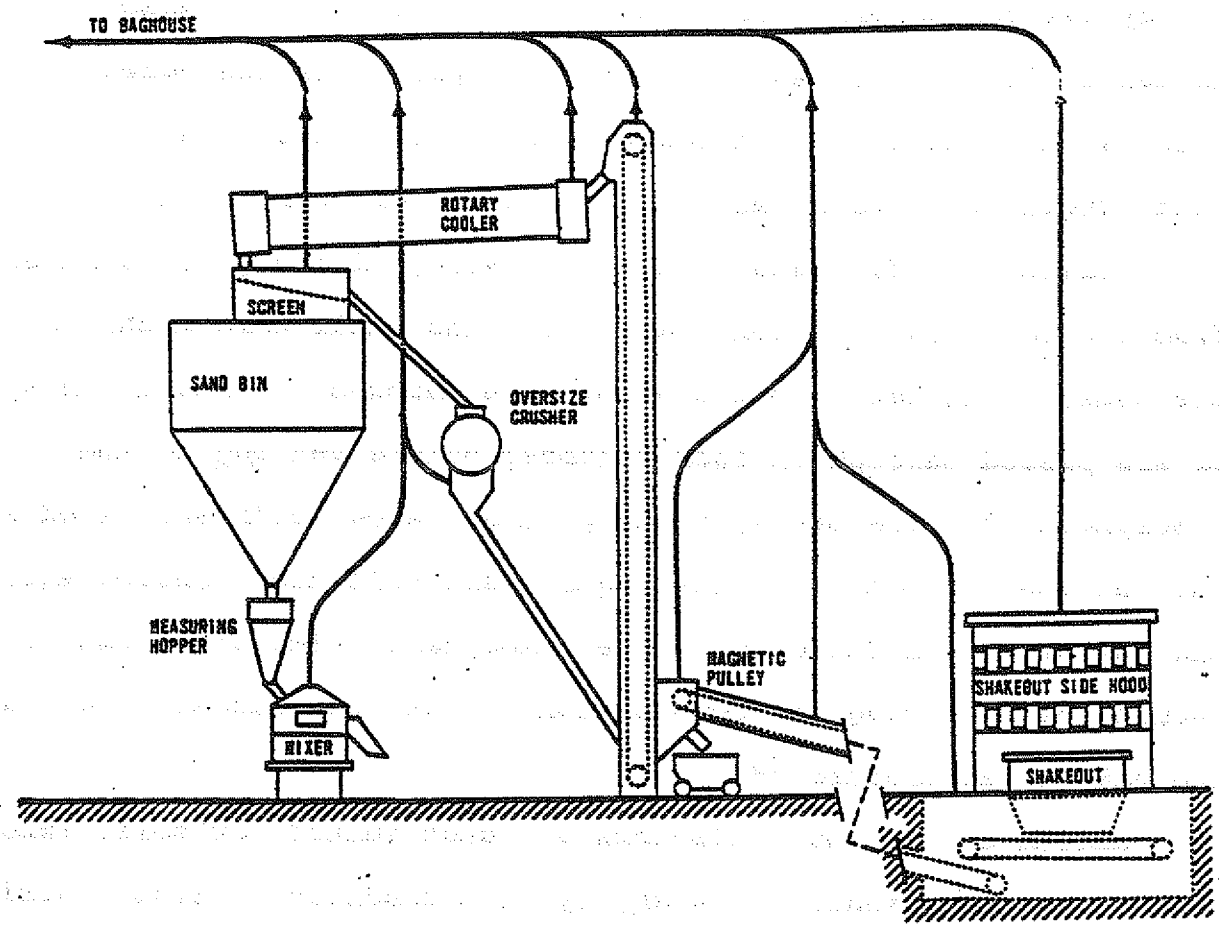

Figure 2.7-15. Capture design for a typical sand-handling system.[46]

2.7.2 Recommended Reasonably Available Control Measures (RACM)

The RACM selections for iron foundry fugitive sources are presented in Table 2.7-3.

The recommended control measure for cupola furnace charging emissions is the maintenance of sufficient draft through the charge door to effectively contain charging emissions and vent them to the existing primary control device. This is the most effective means of control that would not require a large capital outlay for cupolas having above-charge and below-charge take-offs. However, under this control measure, cupola furnace tapping emissions would be uncontrolled.

For control of electric arc and large electric induction furnaces which have primary controls, the selected RACM is maintenance of a continuous draft during the charging and tapping operations through the existing hooding for primary control. This technique could involve some modifications or extensions to the existing hoods to assure good capture. For furnaces which do not have primary controls, RACM consists of localized and canopy hooding which is vented to a fabric filter. For very small electric induction furnaces which have minimal visible emissions, no control is recommended.

No control is recommended for reverberatory furnaces since these are very low emitters of particulate matter and are not usually controlled.

The recommended RACM for ductile iron inoculation is hooding with exhaust to a fabric filter or wet scrubber. This system gives very good control and is commonly applied on existing foundries.

TABLE 2.7-8. A SUMMARY OF THE CONTROL ALTERNATIVES, EFFICIENCIES AND COSTS, AND THE RACM SELECTIONS FOR FUGITIVE DUST EMISSIONS FROM SOURCES AT IRON FOUNDRIES

Fugitive dust sources	Control alternatives	Control efficiency, %	Control costs, Jan. 1980, $		Cost benefit, $/lb	RACM selection
			Capital	Annualized		
(1) Cupola furnace charging and tapping	Hooding, vent to fabric filter	90[a]	336,000[a]	82,000[b]	2.60	Maintenance of continuous draft through charge door (if primary controls present); otherwise hooding, vent to fabric filter
	Building enclosure, evacuation to fabric filter	95[c]	d	d	NA	
	Maintenance of continuous draft through charge door	70[e]	150,000[f]	30,000[g]	1.22	
(2) Electric arc furnace charging and tapping	Hooding, vent to fabric filter	90[a]	336,000[a]	82,000[b]	3.94[r] 1.97[s]	Maintenance of continuous draft during charging and tapping operations (if primary controls present); otherwise hooding, vent to fabric filter
	Building enclosure, evacuation to fabric filter	95[c]	d	d	NA	
	Maintenance of continuous draft during charging and tapping	70[e]	20,000[h]	4,000[g]	0.25[r] 0.12[s]	
(3) Electric induction furnace melting, charging and tapping	Hooding, vent to fabric filter	90[a]	336,000[a]	82,000[b]	1.82	Maintenance of continuous draft during charging and tapping (if primary controls present); otherwise, hooding, vent to fabric filter
	Building enclosure, evacuation to fabric filter	95[c]	d	d	NA	
	Maintenance of continuous draft during charging and tapping	70[e]	20,000[h]	4,000[g]	0.11	
(4) Reverberatory furnace charging and tapping	Hooding, vent to fabric filter or ESP	90[a]	336,000[a]	82,000[b]	27.61	No control
	Building enclosure, evacuation to fabric filter or ESP	95[c]	d	d	NA	
(5) Ductile iron inoculation	Hooding, vent to fabric filter or scrubber	90[a]	153,000[a,i]	33,000[b]	0.28	Hooding, vent to fabric filter or scrubber
	Room enclosure, vent to filter or scrubber	95[c]	d	d	NA	
(6) Pouring molten metal	Hoods, vent to wet scrubber	95[c]	63,000[j]	17,000[b]	0.26	Hoods, vent to scrubber
(7) Casting shakeout	Hoods, vent to wet scrubber or fabric filter	95[c]	234,000[k]	82,000[b]	0.20	Hoods, vent to fabric filter or scrubber

(continued)

TABLE 2.7-8 (continued)

Fugitive dust sources	Control alternatives	Control efficiency,%	Control costs, Jan. 1980, $ Capital	Control costs, Jan. 1980, $ Annualized	Cost benefit, $/lb	RACM selection
(8) Cooling and cleaning castings	Hooding, mechanical collector, fabric filter or scrubber	90[c]	1	1	0.20	m
(9) Finishing castings	Hooding, vent to mechanical collector, fabric filter or scrubber	90-99[a]	1	1	0.20	m
(10) Core and molding sand unloading and storage: mechanical handling	Hooding, vent to mechanical collector	80[c]	33,600[c]	12,000[c]	2.14	Wet suppression (chemical)
	Wet suppression (chemical)	85[c]	26,000[h]	7,000[o]	1.18	
	Enclosure	50[c]	15,000[p]	3,000[g]	0.85	
pneumatic handling	Vent storage hopper to fabric filter	99[c]	NA	NA	NA	Vent storage hopper to fabric filter
(11) Core sand and binder mixing	Hooding, vent to mechanical collector or fabric filter	90[c]	1	1	0.20	m
(12) Core making	Hooding, vent to fabric filter	90[c]	1	1	0.20	m
(13) Core baking	Afterburners	90[c]	35,000[q]	21,000[q]	2.59	No control
(14) Mold sand preparation	Hooding, vent to fabric filter or scrubber	90[c]	1	1	0.20	m
(15) Mold makeup	Hooding, vent to fabric filter or scrubber	90[c]	1	1	0.20	m

NA = Not available.

TABLE 2.7-8 (continued)

[a] Reference [47].

[b] Reference [48].

[c] Estimated.

[d] No cost data available.

[e] Based on control of 95% of charging emissions only. Reference [49].

[f] Reference [49].

[g] Includes only capital charges and maintenance estimated at 20% of capital investment.

[h] Estimated costs of movable ducting required.

[i] Assumed equivalent to control tapping emissions.

[j] Reference [50].

[k] Reference [50]. Based on 50,000 acfm and control of sand handling, cooling, cleaning, mixing, core and mold mixing operations.

[l] Control costs included under the casting shakeout system.

[m] RACM is an integrated system ducting the casting shakeout, sand handling, cooling, cleaning, mixing, core and mold making operations to a single fabric filter or wet scrubber.

[n] Reference [51].

[o] Reference [52].

[p] Reference [53]. Based on 20' x 20' x 30' enclosure.

[q] Reference [54].

r With no alloying in the ladle.

s With alloying in the ladle.

The RACM selected for hot metal pouring operations is hooding and local exhaust to a wet scrubber. This type of system provides very good control (95%).

The selected RACM for control of the casting shakeout fugitive emissions is a system of hoods ducted to a common fabric filter or wet scrubber. This system would be designed to handle exhaust gases from the cleaning and cooling of castings, finishing operations, sand and binder mixing, core and mold makeup, and sand preparation and handling operations. This system is very effective and is used in existing foundries.

The sand unloading operations (truck or railcar dumping into receiving hopper) can be effectively controlled by use of wet suppression. Other options offer inferior control at costs on the same order of magnitude. For the pneumatic unloading and storage of sand, the general industry practice is the use of a fabric filter to control emissions from the storage hopper vent.

No control was selected for the core baking operation since with proper operation this is a relatively minor source of particulate emissions.

REFERENCES FOR SECTION 2.7

1. Compilation of Air Pollutant Emission Factors. U.S. Environmental Protection Agency, Office of Air and Waste Management, Office of Air Quality Planning and Standards. Publication No. AP-42. Research Triangle Park, North Carolina. February 1976. p. 7.10-1.

2. Particulate Pollutant Systems Study, Vol. III. Handbook of Emission Properties. Midwest Research Institute. Prepared for the U.S. Environmental Protection Agency, Air Pollution Control Office. Contract No. CPA 22-69-104. Durham, North Carolina. May 1971.

3. Assessment of Fugitive Particulate Emission Factors for Industrial Processes. PEDCo Environmental, Inc. Prepared for the U.S. Environmental Protection Agency, Office of Air Quality Planning and Standards. Contract No. 68-02-2585. Research Triangle Park, North Carolina. July 1978.

4. Gutow, B.S. An Inventory of Iron Foundry Emission. Modern Casting. January 1972.

5. Air Pollution Aspects of the Iron Foundry Industry. A.T. Kearney Company. Prepared for the U.S. Environmental Protection Agency. PB 204 172. February 1971.

6. Kalika, P.W. Development of Procedures for Measurement of Fugitive Emissions. The Research Corporation of New England. Prepared for the U.S. Environmental Protection Agency. Contract No. 68-02-1815. July 1975.

7. Scott, William D. and Charles E. Bates. Measurement of Iron Foundry Fugitive Emissions. Presented at Symposium on Fugitive Emissions: Measurement and Control. Hartford, Connecticut. May 18, 1976.

8. Personal communication between Thomas J. Kalman, Ohio EPA, and David L. Gallutia, Vice-President, Ohio Cast Metals Federation. January 23, 1981.

9. Fennelly P.F., and P.D. Spawn. Air Pollutant Control Techniques for Electric Arc Furnaces in the Iron and Steel Foundry Industry. GCA/Technology Division. Prepared for the U.S. Environmental Protection Agency, Office of Air and Waste Management, Office of Air Quality Planning and Standards, Research Triangle Park, North Carolina. Contract No. 68-01-4143. EPA-450/2-78-024. June 1978. p. 2-5.

10. Ibid. p. 2-4.

11. Air Pollution Engineering Manual, Second Edition. Danielson, J.A. (ed.). U.S. Environmental Protection Agency. Research Triangle Park, North Carolina. May 1973. p. 236.

12. Systems Analysis of Emissions and Emissions Control in the Iron Foundry Industry. Volume II. A.T. Kearney & Company, Inc. Prepared for the U.S. Environmental Protection Agency, Division of Process Control Engineering, Air Pollution Control Office. Contract No. CPA 22-69-106. February 1971. Exhibit IV-19.

13. Ibid. Exhibit IV-20.

14. Ibid. Exhibit IV-21.

15. Ibid. Exhibit IV-22.

16. Environmental Assessment of Iron Casting. Research Triangle Institute. Prepared for the U.S. Environmental Protection Agency, Industrial Environmental Research Laboratory, Office of Environmental Engineering and Technology, Research Triangle Park, North Carolina. Contract No. 68-02-2630. EPA-600/2-80-021. January 1980. p. 30.

17. Core and Mold Process Control. American Foundrymen's Society, Inc. Des Plaines, Illinois. 1977. pp. 14-27.

18. Op. cit. Reference 12. Exhibit IV-26.

19. Op. cit. Reference 9. p. 2-16.

20. Technical Guidance for Control of Industrial Process Fugitive Particulate Emissions. PEDCo Environmental, Inc. Prepared for the U.S. Environmental Protection Agency, Office of Air and Waste Management, Office of Air Quality Planning and Standards, Research Triangle Park, North Carolina. Contract No. 68-02-1375. EPA-450/3-77-010. March 1977. pp. 2-218, 2-219.

21. Ibid. pp. 2-220 to 2-222.

22. Greenburg, J.H., and R.E. Conover. Report on Systems Analysis of Emissions and Emissions Control in the Iron Foundry Industry in the U.S.A. Modern Casting. March 1971. p. 69.

23. Engels G., and E. Weber. Cupola Emission Control. Gray and Ductile Iron Founders Society, Inc. Cleveland, Ohio. p. 60.

24. Ibid. p. 57.

25. Davis, J.A., et al. Screening Study on Cupolas and Electric Furnaces in Gray Iron Foundries. EPA Contract No. 68-01-0611. Battelle Laboratories. Columbus, Ohio. August 1975. p. III-33.

26. Op. cit. Reference 5. p. 2 of Exhibit IV-6.

27. Ibid. pp. IV-6, IV-7.

28. Op. cit. Reference 12. p. VI-40.

29. Bates, C.D., and L.D. Scneel. Processing Emissions and Occupational Health in the Ferrous Foundry Industry. American Industries Hygiene Association Journal. 35:452-462. August 1974.

30. White, R.L., J.M. Hughes, and N.T. Stephens. Physico-Chemical Properties of Metal Furnace Fume Emissions. Paper Presented at the 69th Annual Meeting of the Air Pollution Control Association. Portland, Oregon. June 27-July 1, 1976.

31. Op. cit. Reference 5. p. 1 of Exhibit IV-6.

32. Op. cit. Reference 12. pp. VI-32, VI-40.

33. Personal communication between Thomas J. Kalman, Ohio EPA, and David L. Gallutia, Vice-President, Ohio Cast Metals Federation. May 28, 1981.

34. Op. cit. Reference 22.

35. Op. cit. Reference 11. p. 269.

36. Op. cit. Reference 9. p. 3-18.

37. Ibid. p. 3-42.

38. Op. cit. Reference 22. p. 67.

39. Op. cit. Reference 16. p. 34.

40. Ibid. pp. 33,34.

41. Op. cit. Reference 12. Volume I. p. VII-67.

42. Op. cit. Reference 16. p. 36.

43. Ibid. p. 61.

44. Op. cit. Reference 22. p. 67.

45. Systems Study for Control of Emissions, Primary Nonferrous Smelting Industry. Arthur G. McKee and Company. Prepared for National Air Pollution Control Administration, Division of Process Control Engineering. Contract PH 86-65-85. June 1969.

46. Op. cit. Reference 11. p. 316.

47. Source Evaluation in Region IV Non-Attainment Areas to Determine TSP Emission Reduction Capabilities. PEDCo Environmental, Inc. Prepared for the U.S. Environmental Protection Agency. Contract No. 68-02-2603, Task No. 2. Research Triangle Park, North Carolina. June 1978. p. 2-7.

48. Industrial Gas Cleaning Institute, Inc. Nonmetallic Minerals Industries Control Equipment Costs. Prepared for the U.S. Environmental Protection Agency, Research Triangle Park, North Carolina. Contract No. 68-02-1473, Task No. 19, February 1977. p. 3-5.

49. Op. cit. Reference 47. p. C-9.

50. Op. cit. Reference 48. p. 3-3.

51. Ibid. p. 4-9.

52. Ibid. p. 4-11.

53. Capital and Operating Costs of Selected Air Pollution Control Systems. GARD, Inc. Prepared for the U.S. Environmental Protection Agency, Office of Air and Waste Management, Office of Air Quality Planning and Standards, Research Triangle Park, North Carolina. EPA-450/3-76-014. May 1976. pp. 4-24 to 4-28.

54. Ibid. pp. 4-9, 4-17, 4-90.

Assume furnace capacity = 11 tph or 33,000 tpy

(1) Cupola furnace charging and tapping
Emissions = (1.05 lb/ton)(33,000 tpy) = 35,000 lbs/yr

Hooding, vent to fabric filter

Capital cost = $336,000
Annual cost = 82,000

$$C/B = \frac{\$82,000/yr}{.9\ (35,000)} = \$2.60/lb$$

Building enclosure evacuation to fabric filter
No data

Maintenance of continuous draft through charge door

Capital cost = $150,000
Annual cost = 30,000

$$C/B = \frac{\$30,000/yr}{.70\ (35,000)} = \$1.22/lb$$

(2) Electric arc furnace charging and tapping
Emissions = (0.7 lb/ton)(33,000 tpy) = 23,100 lbs/yr (no alloying in ladle); (1.4 lbs/ton)(33,000 tpy) = 46,200 lbs/yr (with alloying in ladle)

Hooding, vent to fabric filter

Capital cost = $336,000
Annual cost = 82,000

$$C/B = \frac{\$82,000/yr}{.9\ (23,100)} = \$3.94/lb$$

$$C/B = \frac{\$82,000/yr}{.9\ (46,200)} = \$1.97/lb$$

Building enclosure, evacuation to fabric filter
No data

Maintenance of continuous draft during charging and tapping

Capital cost = $20,000
Annual cost = 4,000

$$C/B = \frac{\$4,000/yr}{.7\ (23,100)} = \$0.25/lb$$

$$C/B = \frac{\$4,000/yr}{.7\ (46,200)} = \$0.12/lb$$

(3) Electric induction furnace melting, charging and tapping
Emissions = (1.5 lb/ton)(33,000 tpy) = 50,000 lbs/yr

Hooding, vent to fabric filter

Capital cost = $336,000
Annual cost = 82,000

$$C/B = \frac{\$82,000/yr}{.9\ (50,000)} = \$1.82/lb$$

Building enclosure, evacuation to fabric filter
No data

Maintenance of continuous draft during charging and tapping

Capital cost = $20,000
Annual cost = 4,000

$$C/B = \frac{\$4,000/yr}{.7\ (50,000)} = \$0.11/lb$$

(4) Reverberatory furnace charging and tapping
Emissions = (0.1 lb/ton)(33,000 tpy) = 3,300 lbs/yr

Hooding, vent to fabric filter or ESP

Capital cost = $336,00
Annual cost = 82,000

$$C/B = \frac{\$82,000/yr}{.9\ (3,000)} = \$27.61$$

Building enclosure, evacuation to fabric or ESP
No data

(5) Ductile iron inoculation
Emissions = (3.9 lbs/ton)(33,000 tpy) = 129,000 lbs/yr

Hooding, vent to fabric filter or scrubber

Capital cost = $153,000
Annual cost = 33,000

$$C/B = \frac{\$33,000/yr}{0.9\ (129,000)} = \$0.28/lb$$

Room enclosure, vent to filter or scrubber
No data

(6) Pouring molten metal
Emissions = (2.115 lb/ton)(33,000 tpy) = 70,000 lbs/yr

Hoods, vent to wet scrubber

Capital cost = $63,000
Annual cost = 17,000

$$C/B = \frac{\$17,000/yr}{.95\ (70,000)} = \$0.26/lb$$

(7) Casting shakeout
Emissions = (7.0 lb/ton)(33,000) = 231,000 lbs/yr

Hoods, vent to wet scrubber or fabric filter

Capital cost = $234,000
Annual cost = 82,000

$$C/B = \frac{\$82,000/yr}{.95\ (231,000) + .9\ (16,000) + .95\ (330) + .9\ (148,500) + .9\ (1,000) + .9\ (43,000) + .9\ (1,300)}$$

$$= \$\ 0.20/lb$$

(8) Cooling and cleaning castings
Emissions = (0.48 lb/ton)(33,000 tpy) = 16,000 lbs/yr

Hooding, mechanical collector, fabric filter or scrubber

See (7)
C/B = $0.20/lb

(9) Finishing casting
Emissions = (0.01 lb/ton)(33,000 tpy) = 330 lbs/yr

Hooding, vent to mechanical collector, fabric filter or scrubber

See (7)
C/B = $0.20/lb

(10) Core and molding sand unloading and storage

Mechanical handling

Emissions = (.03 lb/ton)(33,000 tpy)(15)(.5) = 7,000 lbs/yr

Hooding, vent to mechanical collector

Capital cost = $33,600
Annual cost = 12,000

$$C/B = \frac{\$12,000/yr}{.8\ (7,000)} = \$2.14/lb$$

Wet suppression (chemical)

Capital cost = $26,000
Annual cost = 7,000

$$C/B = \frac{\$7,000/yr}{.85\ (7,000)} = \$1.18/lb$$

Enclosure

Capital cost = $15,000
Annual cost = 3,000

$$C/B = \frac{\$3,000/yr}{.5\ (7,000)} = \$0.85/lb$$

Pneumatic handling

Emissions = NA

Vent Storage hopper to fabric filter

No data

(11) Core sand and binder mixing

Emissions = (4.5 lb/ton)(33,000 tpy) = 148,500 lbs/yr

Hooding, vent to mechanical collector or fabric filter

See (7)

C/B = $0.20/lb

(12) Core making

Emissions = (0.35 lb/ton cores)(3,300 tpy) = ~1,000 lbs/yr

Hooding, vent to fabric filter

See (7)

C/B = $0.20/lb

(13) Core baking
Emissions = (2.7 lb/ton core)(3,300 tpy) = 9,000 lbs/yr

Afterburners

Capital cost = $35,000
Annual cost = 21,000

$$C/B = \frac{\$21,000/yr}{.9\ (9,000)} = \$2.59/lb$$

(14) Mold sand preparation
Emissions = (1.3 lb/ton)(33,000 tpy) = 43,000 lbs/yr

Hooding, vent to fabric filter or scrubber

See (7)
C/B = $0.20/lb

(15) Mold makeup
Emissions = (0.04 lb/ton)(33,000 tpy) = 1,300 lbs/yr

Hooding, vent to fabric filter or scrubber

See (7)
C/B = $0.20/lb

2.8 STEEL FOUNDRIES

2.8.1 Process Description

Most steel foundries are operated independently from any integrated iron and steel mill. They produce low carbon content (1 percent or less) steel castings for use within the foundry to produce another product or by manufacturers of heavy equipment.

Several types of furnaces are used to melt the raw materials used to produce these steel castings: direct electric arc, electric induction, open hearth and crucible. The crucible furnace is not in widespread use. (See Sections 2.2.3 and 2.7 for illustrations of some of those types of furnaces.)

Figure 2.8-1 illustrates the process flow for a typical steel foundry operation. The melting furnace is charged through a door or opening with raw materials such as steel scrap, pig iron, ferroalloys and limestone. These materials melt as the furnace temperature is increased. When the temperature reaches about 3000°F, the furnace is tapped and molten metal flows to a holding ladle. The molten metal is transferred from the holding ladle to a pouring ladle and is then poured into prepared molds. The molten steel sets to form castings which are then shaken out of the mold and allowed to cool further. The castings are usually cleaned by shot blasting, and excess metal and surface defects are removed by localized melting and grinding. Finishing operations may include heat treatment in a soaking pit or furnace and surface painting.

Production of molds and cores is an integral part of the steel foundry operation. A mold is usually made of silica sand (although zircon and olivine sand are also used) mixed with water and binders such as clay, pitch or cereal. The mixture is transferred to a molding area, where it is either mechanically or hand packed into a flask.

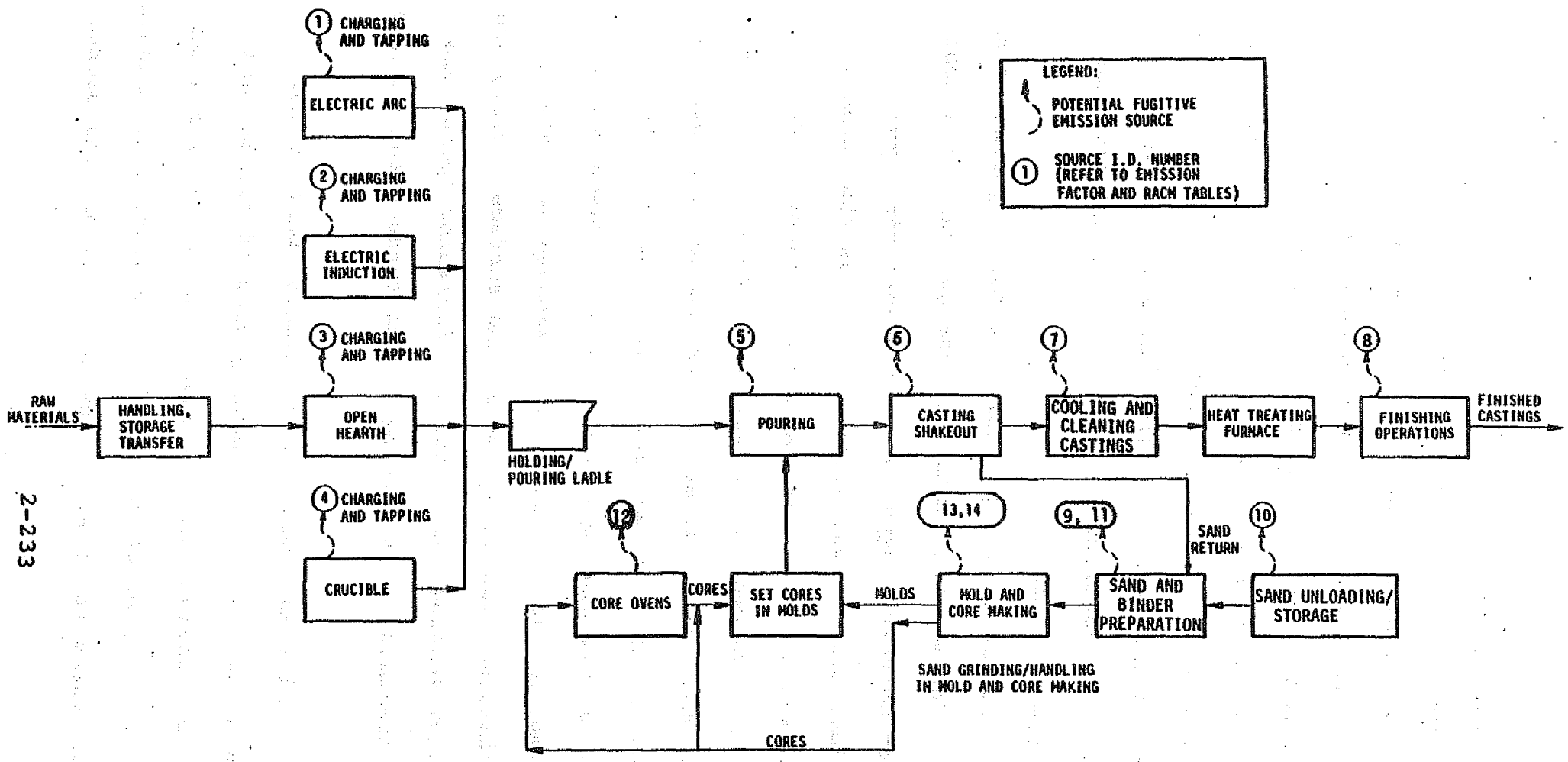

Figure 2.8-1. Simplified process flow diagram for steel foundries and associated fugitive particulate emission sources.

A core is a separate part of the mold that provides a cavity in the castings. Cores are usually made of sand and binders and are usually, but not always, bound to the mold with core paste. The core must be strong enough to withstand the temperature and pressure of the molten metal within the mold. Silicate, resin, oil and cereal binders are used to provide this strength. After the cores are formed, they may be baked in ovens or cured by carbon dioxide, air, a tertiary amine catalyst (Isocure process) or by using heated core boxes (shell and hotbox processes).

The potential fugitive emission sources associated with steel foundries are raw material handling, storage, and transfer operations, charging and tapping of the melting furnaces, pouring into molds, casting shakeout, cleaning operations, finishing operations, sand preparation, and mold and core making.

Large steel foundries operate continuously, 24 hours a day, 7 days a week, while smaller foundries operate only 8 hours a day. The capacity of a foundry depends upon the number and size of furnaces, but typically ranges from 25 to 240 tons of steel produced per day.

2.8.2 Fugitive Dust Emission Factors

The estimated emission factors for steel foundry fugitive particulate sources are summarized in Table 2.8-1. There is practically no data availabl on fugitive emission rates from steel foundries; and, therefore, it is suggested that emission factors for iron foundries (Section 2.7) be used for steel foundries. These are also included in Table 2.8-1 for informational purposes.

It should be noted that use of the iron foundry emission factors for mold sand preparation, core sand and binder mixing and mold making may not be directly applicable to such operations at steel foundries due to differenc in yields and possibly in sand to metal ratios between steel and iron casting production. Such differences should be evaluated and, if necessary, adjustme made to such emission factors to reflect any differences.

TABLE 2.8-1. FUGITIVE DUST EMISSION FACTORS FOR STEEL FOUNDRIES[a]

Source	Emission factor	Reliability rating	References
1 Electric arc furnace charging and tapping	1.05 to 3.48 lb/ton steel	E	1,2
2 Electric induction furnace melting, charging and tapping	0.1 lb/ton metal charged	E	3
3 Open hearth furnace charging and tapping	0.1 to 0.9 lb/ton metal charged	E	4,5
4 Crucible furnace charging and tapping	0.1 to 0.6 lb/ton metal	E	6
5 Hot metal pouring	0.55 to 4.13 lb/ton metal	D	7,8
6 Shakeout of castings[b]	1.2 to 12.8 lb/ton steel	E	1,9
7 Cooling and cleaning castings[b]	0.16 to 0.8 lb/ton castings	E	9
8 Finishing castings[b]	0.01 lb/ton castings	E	9
9 Mold sand preparation[b]	1.3 lb/ton castings	E	1
10 Core and mold sand unloading and storage:			
mechanical handling	0.03 lb/ton sand unloaded[c]	E	6
pneumatic handling	NA		
11 Mixing of core sand and binder[b]	0.3 lb/ton sand, or 0.75 to 8.24 lb/ton	E E	10 1,9
12 Core baking	0.03 to 5.4 lb/ton cores baked	E	6,9,10
13 Core making[b]	0.35 lb/ton cores	E	10
14 Mold making[b]	0.04 lb/ton castings	E	9

NA = Not available.

[a] Where ranges are given, use average unless more accurate data is available.

[b] Emission factor given is for iron foundries.

[c] Sand unloading emission factor is assumed to be equivalent to the taconite pellets unloading emission factor as presented in Section 2.1.3. Fugitive dust emissions from storage are estimated to be negligible since sand is normally stored indoors.

2.8.3 Particle Characterization

Data on particle characteristics specific for steel foundries were not found in the literature. Data were available for iron foundries. The available data are presented similar for steel foundries. The available data are presented in Section 2.7.3.

2.8.4 Control Methods

Control techniques available for steel foundries are essentially the same as those for iron foundries. Section 2.7.4 presents a discussion of available control options.

Available control techniques, their effectiveness, estimated costs and RACM selections are listed in Table 2.8-2. Where data were unavailable, it was assumed that control characteristics would be the same as those for control of iron foundries (See Section 2.7.4).

2.8.5 Recommended Reasonably Available Control Measures (RACM)

The RACM selections for steel foundry fugitive sources are presented in Table 2.8-2. It is noted that the reduction of emission from melting operations is enhanced when clean scrap is used in the raw charge. Clean materials that are essentially devoid of dirt, oil or grease carry no extraneous burden into and through the furnace. Use of clean scrap, or the pre-cleaning of dirty scrap before use, are useful and appropriate measures worthy of consideration as adjunctive to and supportive of other control measures.

TABLE 2.8-2. A SUMMARY OF THE CONTROL ALTERNATIVES, EFFICIENCIES AND COSTS, AND THE RACM SELECTIONS FOR FUGITIVE DUST EMISSIONS FROM SOURCES AT STEEL FOUNDRIES

Fugitive dust sources	Control alternatives	Control efficiency, %	Control cost, Jan. 1980, $		Cost benefit, $/lb	RACM selection
			Capital	Annualized		
(1) Electric arc furnace charging and tapping	Hooding, vent to fabric filter	90[a]	336,000[a]	82,000[b]	1.09	Maintenance of continuous draft during charging and tapping operations (if primary controls present); otherwise hooding, vent to fabric filter
	Building enclosure, evacuation to fabric filter	95[c]	d	d	d	
	Maintenance of continuous draft during charging and tapping	70[e]	20,000[h]	4,000[g]	0.07	
(2) Electric induction furnace, charging and tapping	Hooding, vent to fabric filter	90[a]	336,000[a]	82,000[b]	23.11	Maintenance of continuous draft during charging and tapping (if primary controls present); otherwise, no control
	Building enclosure, evacuation to fabric filter	95[c]	d	d	d	
	Maintenance of continuous draft during charging and tapping	70[e]	20,000[f]	4,000[g]	1.45	
(3) Open hearth furnace charging and tapping	Hooding, vent to fabric filter	90[a]	336,000[a]	82,000[b]	4.62	Maintenance of continuous draft during charging and tapping operations (if primary controls present); otherwise hooding, vent to fabric filter
	Building enclosure, evacuation to fabric filter	95[c]	d	d	d	
	Maintenance of continuous draft during charging and tapping	70[e]	20,000[f]	4,000[g]	0.29	
(4) Crucible furnace charging and tapping	Hooding, vent to fabric filter	90[a]	336,000[a]	82,000[b]	8.32	No control
	Building enclosure, evacuation to fabric filter	95[c]	d	d	d	
	Maintenance of continuous draft during charging and tapping	70[e]	20,000[f]	4,000[g]	0.52	

(continued)

TABLE 2.8-2 (continued)

Fugitive dust sources	Control alternatives	Control efficiency, %	Control cost, Jan. 1980, $ Capital	Control cost, Jan. 1980, $ Annualized	Cost benefit, $/lb	RACM selection
(5) Hot metal pouring	Hoods, vent to wet scrubber or fabric filter	95[c]	63,000[h]	18,000[b]	0.22	Hoods, vent to fabric filter
(6) Casting shakeout	Hoods, vent to wet scrubber or fabric filter	95[c]	234,000[i]	82,000[b]	0.18	Hoods, vent to fabric filter
(7) Cooling and cleaning castings	Hooding, mechanical collector, fabric filter or scrubber	90[c]	j	j	j	k
(8) Finishing castings	Hooding, vent to mechanical collector, fabric filter or scrubber	90-99[e]	j	j	j	k
(9) Mold sand preparation	Hooding, vent to fabric filter or scrubber	90[c]	j	j	j	k
(10) Core and mold sand unloading and storage:						
mechanical handling	Wet suppression (chemical)	85[c]	26,000	7,000	1.00	Wet suppression (chemical)
	Enclosure	50[c]	16,000	3,000	0.73	
	Hooding, vent to mechanical collectors	80[c]	33,600	12,000	1.83	
pneumatic handling	Vent to storage hopper to fabric filter	99[c]	NA	NA	NA	Vent to storage hopper to fabric filter
(11) Core sand and binder mixing	Hooding, vent to mechanical collector or fabric filter	90[c]	j	j	j	k
(12) Core baking	Afterburners	90[c]	35,000	21,000	2.37	No control
(13) Core making	Hooding, vent to fabric filter	90[c]	j	j	j	k
(14) Mold makeup	Hooding, vent to fabric filter or scrubber	90[c]	j	j	j	k

[a] Reference 11.

[b] Reference 12.

[c] Estimated.

[d] No cost data available.

[e] Based on control of 95% of charging emissions only. Reference 13.

[f] Estimated costs of movable ducting required.

[g] Includes only capital charges and maintenance estimated as 20% of capital investment.

[h] Reference 14.

[i] Reference 14. Based on 50,000 acfm and control of sand handling, cooling, cleaning, mixing, screening, core and mold making operations.

[j] Control costs included under casting shakeout system.

[k] RACM is an integrated system ducting the casting shakeout, sand handling, cooling, cleaning, mixing, screening, core and mold making operations to a single fabric filter.

The selected RACM for control of electric arc, electric induction and open hearth furnaces is predicated upon utilization of an existing capture and control system to effect emission control at charging and tapping operations. The RACM technique may necessitate modification of the existing hood(s) and duct system(s) and may require the addition of control device capacity. For electric arc and open hearth furnaces with no primary controls, RACM consists of localized and canopy hooding vented to a fabric filter. For electric induction furnaces with no primary controls, RACM is no control.

No control is recommended for crucible furnaces since these are fairly low emitters of particulate matter, are not usually controlled, and are being phased out of the industry.

The RACM selected for hot metal pouring operations is hooding and local exhaust to a fabric filter. This type of system gives an estimated 95 percent control and has typically been employed at foundries.

The selected RACM for control of the casting shakeout fugitive emission is a local exhaust system comprised of hood(s), ductwork and a fabric filter. Combination systems can be designed to handle exhaust gases from the cleaning and cooling castings, finishing operations, sand and binder mixing, core and mold make up, sand preparation and handling operations. Such systems are very effective and are used in existing foundries.

For illustrations of some of the above control methods, see Section 2.7.

REFERENCES FOR SECTION 2.8

1. Gutow, B.S. An Inventory of Iron Foundry Emission. Modern Casting. January 1972.

2. Air Pollution Aspects of the Iron Foundry Industry. A.T. Kearney Company. Prepared for U.S. Environmental Protection Agency. PB 204 172. February 1971.

3. A Method for Characterization and Quantification of Fugitive Lead Emissions from Secondary Lead Smelters, Ferroalloy Plants, and Gray Iron Foundries. PEDCo Environmental, Inc. Prepared for U.S. Environmental Protection Agency, Monitoring and Data Analysis Division, Contract No. 68-02-2515. Research Triangle Park, North Carolina. January 1978.

4. Compilation of Air Pollutant Emission Factors. U.S. Environmental Protection Agency, Office of Air and Waste Management, Office of Air Quality Planning and Standards. Publication No. AP-42. Research Triangle Park, North Carolina. February 1976.

5. Iversen, R.E. Meeting with U.S. Environmental Protection Agency with AISI on Steel Facility Emission Factors, April 14 and 15, 1976. U.S. Environmental Protection Agency Memorandum. June 7, 1976.

6. PEDCo Environmental, Inc. Technical Guidance for Control of Industrial Process Fugitive Particulate Emissions. Report No. EPA-450/3-77-010. Research Triangle Park, North Carolina. March 1977.

7. A Study of Fugitive Emissions from Metallurgical Processes. Midwest Research Institute. Kansas City. Report No. 5. November 1975.

8. A Study of Fugitive Emissions from Metallurgical Processes. Midwest Research Institute. Kansas City. Report No. 11. May 1976.

9. Scott, William D. and Charles E. Bates. Measurement of Iron Foundry Fugitive Emissions. Presented at Symposium on Fugitive Emissions: Measurement and Control. Hartford, Connecticut. May 18, 1976.

10. Particulate Pollutant Systems Study, Vol. III. Handbook of Emission Properties. Midwest Research Institute. Prepared for the U.S. Environmental Protection Agency, Air Pollution Control Office. Contract No. CPA 22-69-104. Durham, North Carolina. May 1971.

11. PEDCo Environmental, Inc. Source Evaluation in Region IV Non-Attainment Areas to Determine TSP Emission Reduction Capabilities. Prepared for U.S. Environmental Protection Agency. Contract No. 68-02-2603, Task No. 2. Research Triangle Park, North Carolina. June 1978. p. 2-7.

12. Industrial Gas Cleaning Institute, Inc. Nonmetallic Minerals Industries Control Equipment Costs. Prepared for U.S. Environmental Protection Agency, Research Triangle Park, North Carolina. Contract No. 68-02-1473, Task No. 19, February 1977.

13. Op. cit. Reference 11. p. C-9.

14. Op. cit. Reference 12. p. 3-3.

APPENDIX FOR SECTION 2.8

Assume 100 tpd steel production, 93% yield and 108 tpd input

(1) Electric arc furnace

Emissions = (2.3 lb/ton)(100 tpd)(365 d/y)
= 83,950 lbs/yr

Hooding, vent to fabric filter

$$\text{Capital cost} = \$275{,}000 \left(\frac{249.6}{204.1}\right) = \$336{,}000$$

$$\text{Annual cost} = \$67{,}100 \left(\frac{249.6}{204.1}\right) = \$82{,}000$$

$$C/B = \frac{\$82{,}000/\text{yr}}{.9\ (83{,}950)} = \$1.09/\text{lb}$$

Building enclosure, evacuation to fabric filter

No data

Maintenance of continuous draft during charging and tapping

$$\text{Capital cost} = \$16{,}800 \left(\frac{249.6}{204.1}\right) = \$20{,}000$$

$$\text{Annual cost} = \$4{,}000$$

$$C/B = \frac{\$4{,}000/\text{yr}}{.7\ (83{,}950)} = \$0.07/\text{lb}$$

(2) Electric induction furnace, charging and tapping

Emissions = (0.1 lb/ton)(108)(365) = 3,942 lbs/yr

Hooding, vent to fabric filter

See (1)

$$C/B = \frac{\$82{,}000/\text{yr}}{.9\ (3{,}942)}\ \$23.11/\text{lb}$$

Building enclosure, evacuation to fabric filter

No data

Maintenance of continuous draft during charging and tapping

See (1)

$$C/B = \frac{\$4{,}000/\text{yr}}{.7\ (3{,}942)} = \$1.45/\text{lb}$$

(3) Open hearth furnace charging and tapping
Emissions = (0.5 lb/ton)(108)(365) = 19,719 lbs/yr

Hooding, vent to fabric filter

See (1)

$$C/B = \frac{\$82,000/yr}{.9\ (19,710)} = \$4.62/lb$$

Building enclosure, evacuation to fabric filter
No data

Maintenance of continuous draft during charging and tapping

See (1)

$$C/B = \frac{\$4,000/yr}{.7\ (19,710)} = \$0.29/lb$$

(4) Crucible furnace charging and tapping
Emissions = (0.3 lb/ton)(100)(365) = 10,950 lbs/yr

Hooding, vent to fabric filter

See (1)

$$C/B = \frac{\$82,000/yr}{.9\ (10,950)} = \$8.32/lb$$

Building enclosure, evacuation to fabric filter
No data

Maintenance of continuous draft during charging and tapping

See (1)

$$C/B = \frac{\$4,000/yr}{.7\ (10,950)} = \$0.52/lb$$

(5) Hot metal pouring
Emissions = (2.34 lbs/ton)(36,500 tpy) = 85,410 lbs/yr

Hoods, vent to wet scrubber or fabric filter

$$\text{Capital cost} = 51,500 \left(\frac{249.6}{204.1}\right) = \$63,000$$

$$\text{Annual cost} = 15,000 \left(\frac{249.6}{204.1}\right) = \$18,000$$

$$C/B = \frac{\$18,000/yr}{.95\ (85,410)} = \$0.22/lb$$

(6) Casting shakeout
Emissions = (7.0 lbs/ton) x (100)(365) = 255,500 lbs/yr

<u>Hoods, vent to wet scrubber or fabric filter</u> (Includes control of source #'s 7, 8, 9, 11, 13, 14)

$$\text{Capital cost} = 190{,}000 \left(\frac{249.6}{204.1}\right) = \$234{,}000$$

$$\text{Annual cost} = 67{,}000 \left(\frac{249.6}{204.1}\right) = \$82{,}000$$

$$C/B = \frac{\$82{,}000/\text{yr}}{.95(255{,}500) + 0.9(17{,}520) + .95(365) + .9(47{,}450) + .9(164{,}250) + .9(1{,}278) + .9(1{,}460)} = \$0.18/\text{lb}$$

(7) Cooling and cleaning castings
Emission = (0.48 lb/ton)(36,500 tpy) = 17,520 lbs/yr

<u>Hooding, mechanical collector, fabric filter or scrubber</u>

See (7)
C/B = $0.18/lb

(8) Finishing castings
Emissions = (0.01 lb/ton)(36,500 tpy) = 365 lbs/yr

<u>Hooding, vent to mechanical collector, fabric filter or scrubber</u>

See (7)
C/B = $0.18/lb

(9) Mold sand preparation
Emissions = (1.3 lbs/ton)(36,500 tpy) = 47,450 lbs/yr

<u>Hooding, vent to fabric filter or scrubber</u>

See (7)
C/B = $0.18/lb

(10) Core and mold sand unloading and storage

<u>Mechanical handling</u>
Emissions = (0.03 lb/ton)(36,500 tpy)(15)(.5) = 8,213 lbs/yr

<u>Hooding, vent to mechanical collectors</u>

Capital cost = $33,600
Annual cost = 12,000

$$C/B = \frac{\$12{,}000/\text{yr}}{.8\ (8{,}213)} = \$1.83/\text{lb}$$

Wet suppression (chemical)

Capital cost = $26,000
Annual cost = 7,000

$$C/B = \frac{\$7,000/yr}{.85\ (8,213)} = \$1.00/lb$$

Enclosure

Capital cost = $15,000
Annual cost = $3,000

$$C/B = \frac{\$3,000/yr}{.5\ (8,213)} = \$0.73/lb$$

Pneumatic handling
Emissions = NA

Vent storage hopper to fabric filter
No data

(11) Core sand and binder mixing
Emissions = (4.5 lbs/ton)(36,500 tpy) = 164,250 lbs/yr

Hooding, vent to mechanical collector or fabric filter

See (7)
C/B = $0.18/lb

(12) Core baking
Emissions = (2.7 lbs/ton)(0.1)(36,500 tpy) = 9,855 lbs/yr

Afterburners

Capital cost = $35,000
Annual cost = $21,000

$$C/B = \frac{\$21,000/yr}{.9\ (9,855)} = \$2.37/lb$$

(13) Core making
Emissions = (.35 lb/ton cores)(.1)(36,500 tpy) = 1,278 lbs/yr

Hooding, vent to fabric filter

See (7)
C/B = $0.18/lb

(14) Mold makeup
Emissions = (0.04 lb/ton)(36,500 tpy) = 1,460 lbs/yr

Hooding, vent to fabric filter or scrubber

See (7)
C/B = $0.18/lb

2.9 GLASS MANUFACTURING PLANTS

2.9.1 Process Description

Glass is defined as an amorphous, multicomponent mixture of inorganic oxides. As commercially produced, there are several recognized classifications that are named on the basis of composition or feed materials, such as soda-lime, fused silica, borosilicate or 96 percent silica. Of these classifications, soda-lime glass, comprising 90 percent[1] of total glass production, has been selected for description. The processes involved in making other types of glasses are basically the same. Soda-lime glass consists of sand, limestone, soda ash, cullet (broken, recycled glass) and small amounts of conditioners such as sulfates. Typical product composition is:[2]

70 to 74 wt. percent SiO_2,

10 to 13 wt. percent CaO, and

13 to 16 wt. percent Na_2O.

A flow diagram of the manufacturing process is shown in Figure 2.9-1.

The part of the process dealing with feed material storage and handling is normally housed separately and is referred to as the batch plant. The materials are individually received by rail or truck and are dumped into a receiving hopper. After passing through a crusher, it is transferred via screw conveyor and bucket elevator to elevated feed material storage hoppers. Cullet is handled in similar fashion from a surge hopper. The major and minor ingredients are gravity fed from the storage

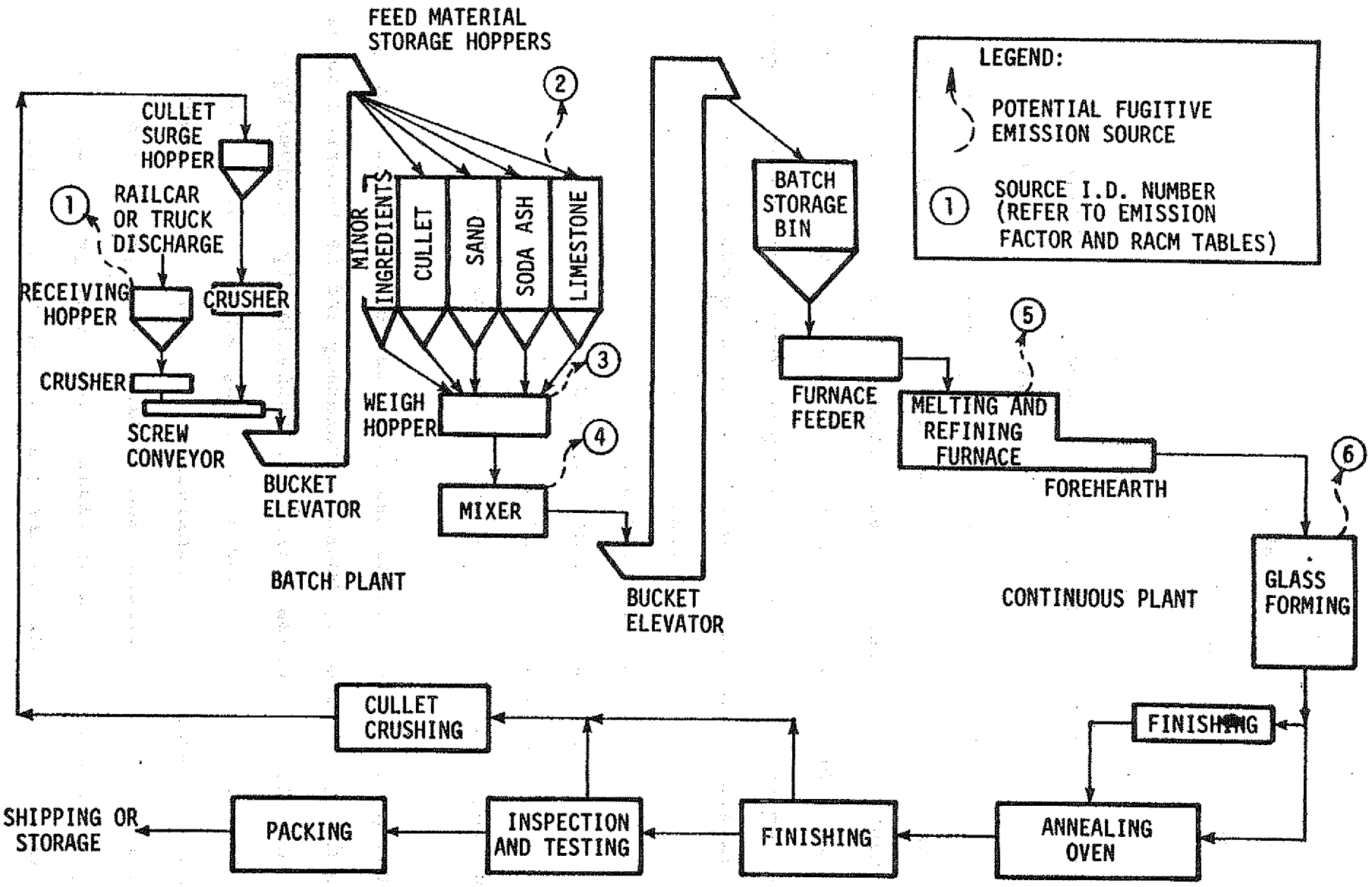

Figure 2.9-1. Simplified process flow diagram for manufacture of soda-lime glass and associated fugitive particulate emission sources.

hoppers to a weigh hopper where proper batch proportions of the ingredients are regulated. The batch is then dropped by gravity into a mixer from which it is taken by bucket elevator to a batch storage bin. The mixed material is charged as needed to the melting furnace through a furnace feeder which regulates the rate of charging.

The feed materials charged to the furnace are melted and maintained at 2700 to 3100°F to promote chemical reaction of the materials and to produce a mass of uniform consistency.[3] A process known as fining, which is the removal of gas bubbles, also takes place at this temperature where the melt viscosity is minimal. The melt thereafter passes to the conditioning section of the furnace where the temperature is slowly lowered to 2400°F to increase melt viscosity and forming characteristics.[4]

The furnace most commonly utilized is a continuous, gas-fired, regenerative furnace with a glass production capacity of 50 to 300 tons per day.[5] As shown in Figures 2.9-2 and 2.9-3, the furnace may have either side or end ports connecting brick checker-work to the interior of the furnace. The purpose of the checker-work is to conserve fuel by utilization of the heat in the combustion products to preheat the combustion air to the furnace. To accomplish this economy, the paths of the combustion air and furnace exhaust gases are periodically reversed from one end of the furnace to the other.

Furnaces may also be oil-fired and use an alternative heat transfer system known as recuperative heat recovery. Also,

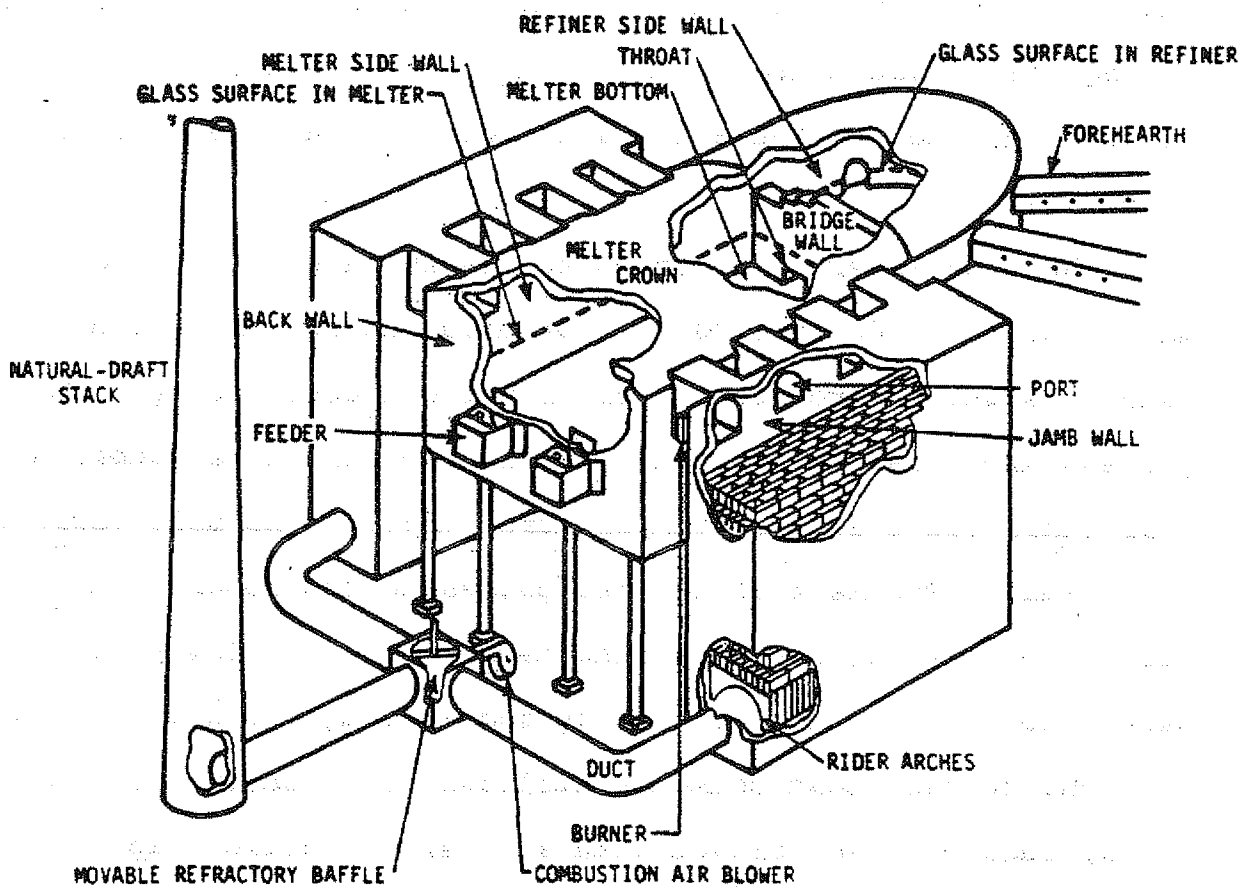

Figure 2.9-2. Side-port continuous regenerative furnace.[1]

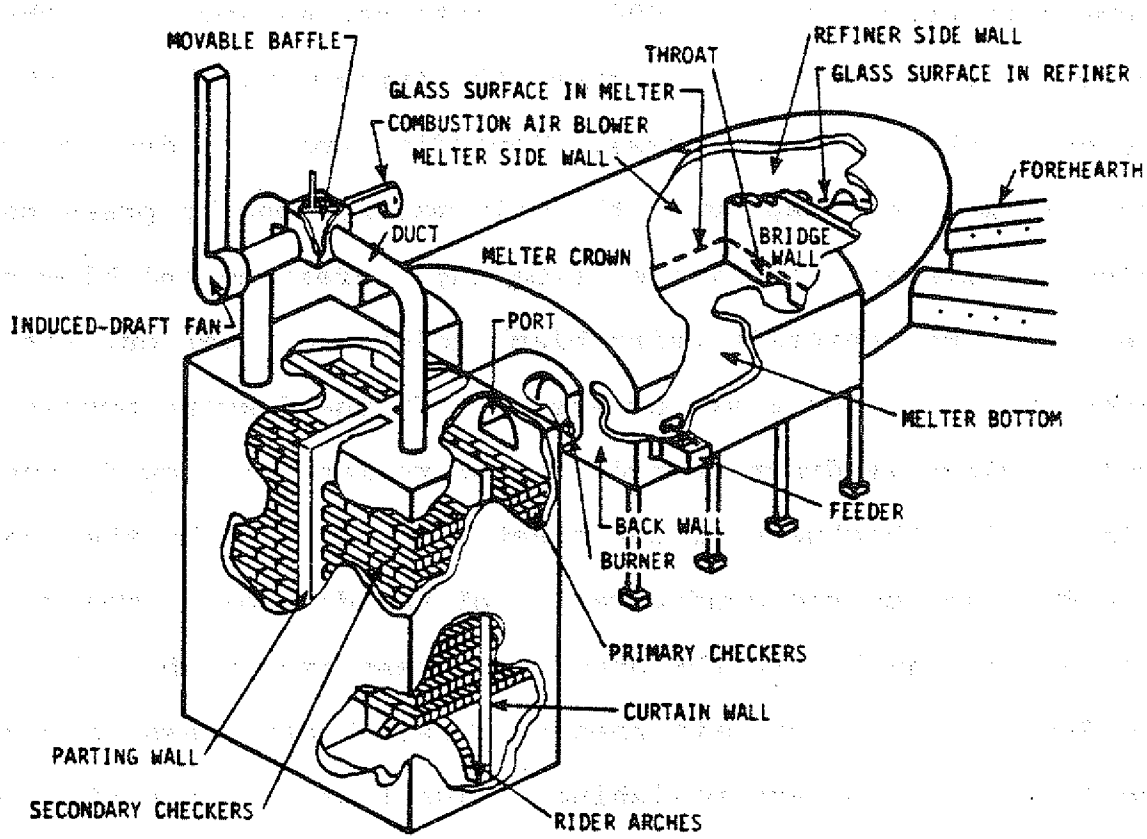

Figure 2.9-3. End-port continuous regenerative furnace.[1]

electric induction systems may be used to provide a boost in production rates. Electric induction can also be used exclusively for melting the glass.

After the melt has been refined, it is ready to be formed at temperatures of 1500 to 2000°F.[6] With the exception of the float process, the molten glass leaves the furnace via the forehearths to go to the forming process. Depending upon the desired product, forming or shaping of the melt may be done by pressing, blowing, drawing, rolling or floating. Pressing and blowing are performed mechanically using blank molds and glass cut into sections (gobs) by a set of shears. In the drawing process, molten glass is drawn upward through rollers that guide the sheet glass. The thickness of the sheet is determined by the speed of the draw and by the configuration of the draw bar. The rolling process is similar to the drawing process except that the glass is drawn by plain or patterned rollers. Plate glass so produced requires grinding and polishing.[1] The float process utilizes a molten tin bath over which glass from the melt furnace is drawn and formed into a finely finished surface requiring no grinding or polishing.[1]

The shaped product may be finished (decorated or coated) before being annealed, or it may proceed directly to annealing. Annealing is required to remove stresses incurred in the forming process. Upon subsequent finishing operations such as cutting or trimming, the product is cooled to room temperature, inspected and tested prior to packaging and shipment. Rejected product

material is crushed to form coarse cullet that is recycled to the cullet surge hopper preparatory to recharging it to the melt furnace.

The potential sources of fugitive particulate emissions from the process area are:

1. discharge of materials from railcar or truck,
2. storage hoppers,
3. feed materials weigh hopper,
4. feed materials mixer,
5. melting and refining furnace, and
6. glass forming area.

2.9.2 Fugitive Dust Emission Factors

The fugitive emission factors for the various manufacturing operations are presented in Table 2.9-1. Although there is recognition of such emissions within the industry, the literature surveyed contained no data concerning fugitive emissions. The factors shown were derived from analogous operations in other industries. The melting furnace itself is a point source having a stack to vent combustion and reaction gases from the furnace. This exhaust stream is usually routed through a control device for particulate removal. In the event of furnace leakage, however, fugitive emissions would occur in the melt building and escape to the atmosphere via the roof vents. The emission factor shown is an estimated portion of the uncontrolled stack emissions.

TABLE 2.9-1. FUGITIVE DUST EMISSION FACTORS FOR GLASS MANUFACTURING PLANTS

Source	Uncontrolled fugitive emission factor		
	lb/ton of glass produced	Reference	Reliability rating
(1) Feed materials receiving	1.0[a]	1,5	E
(2) Feed materials transfer to storage	0.5[b]	4	E
(3) Materials batch weighing	0.02[c]	4	E
(4) Materials mixing	0.04[c]	4	E
(5) Melting and refining furnace	0.15[d]	6,8	E
(6) Glass forming	Neg.[e]	1,6,8	E

[a] Estimated emission factor from reference 7 for soda ash and reference 8 for alumina unloading.

[b] Estimated average factor based upon analogous cement industry operating factors from reference 9.

[c] Factors taken from analogous cement industry operations in reference 10.

[d] Engineering estimate that fugitive emissions from the furnace equal 5 percent of the uncontrolled stack emissions. Stack emissions for soda-lime glass manufacture were obtained from references 11 and 12.

[e] Per references 13 and 14, emissions from this source are vapors, not particulate.

2.9.3 Particle Characterization

The particles emanating from the feed materials handling section of the plant are relatively large in size, 10 to 100 μm diameter,[15] and reflect the feed materials being handled (i.e., sand, soda ash and limestone).

Particulate coming from the melting furnace, however, is smaller in size and has a composition high in sodium, silicon and calcium. The literature[16,17] cites particle sizes less than 1 micron in diameter for the furnace effluent.

Toxicity of emissions, either gaseous or particulate, has not been established in the literature surveyed. There are analytical data, however, which show the presence of fluorides in the particulate emission from the melting furnace when a fluoride flux or feed material is employed.[18] These data also show the presence of gaseous fluoride, arsenic and hydrocarbons in furnace and forming effluent gases.

2.9.4 Control Methods

A summary of the fugitive emission control alternatives is presented in Table 2.9-2. As can be seen from the table, a variety of methods are applicable for control of fugitive emissions from feed materials handling. Emissions generated when feed materials are discharged from rail cars or trucks may be controlled by enclosing the site of discharge, by using pneumatic conveying removal of received material, by employing choke-feeding to prevent flooding of materials from the carrying vehicle or by wetting of the material with a small amount of water.

TABLE 2.9-2. A SUMMARY OF THE CONTROL ALTERNATIVES, EFFICIENCIES AND COSTS, AND THE RACM SELECTIONS FOR FUGITIVE DUST EMISSIONS FROM SOURCES AT GLASS MANUFACTURING PLANTS

Fugitive dust sources	Control alternatives	Control efficiency, %	Control costs $ (Jan. 1980)		Cost benefit, $/lb	RACM selection
			Capital	Annualized		
(1) Feed materials receiving	Closure	50[a]	28,000[b]	9,000[c]	0.33	Closure, fabric filter
	Closure, fabric filter	90[a]	93,000[b,n]	30,000[c,d]	0.62	
	Choke-feeding	70[d]	33,000[e]	11,000[c]	0.29	
	Wet suppression	50[f]	23,000[g]	7,000[h]	0.26	
	Pneumatic unloading	90[d]	53,000[i]	22,000[j]	0.45	
(2) Feed materials transfer to storage	Wet suppression	50[f]	23,000[g]	7,000[h]	0.52	Wet suppression
	Area ventilation to fabric filter	90[k]	136,000[l]	49,000[m]	2.02	
(3) Feed materials batch weighing	Fabric filter	90[k]	65,000[n]	21,000[o]	21.60	Fabric filter
(4) Feed materials mixing	Fabric filter	90[k]	65,000[n]	21,000[o]	10.80	Fabric filter
(5) Melting and refining furnace	Preventive maintenance of furnace and control device	90[d]	Neg.[p]	25,000[q]	3.43	Furnace and control device preventive maintenance
(6) Glass forming	None					

[a] Estimated for partial closure based upon data in reference 19.
[b] Estimated per reference 20.
[c] Reflects enclosure maintenance estimated at 15% of investment cost and indirect costs estimated at 17% of investment cost.
[d] Estimated effectiveness based on engineering experience and judgment.
[e] Estimated per reference 21.
[f] Per reference 22. Method cited in reference 23.
[g] Estimated per reference 24 for one site of spray application and a rate of 50 tons per hour.
[h] Estimated per reference 25.
[i] Estimated for 500 cfm system.
[j] Estimated cost based upon engineering judgment.
[k] Combined efficiency of hood capture and fabric filter control.
[l] Per reference 26 for 20,000 cfm air flow.
[m] Per reference 27 for 20,000 cfm air flow.
[n] Per reference 26 for 10,000 cfm estimated air flow.
[o] Per reference 27 for 10,000 cfm estimated air flow.
[p] Increase of maintenance will not incur capital charges.
[q] Estimated costs for increased maintenance labor and materials.

Choke-feeding regulates solids feed flow by use of a flow control device such as an intermediate hopper fitted with a motor drive rotary valve. This prevents flooding, the action when finely divided solids flow from a container at an extremely high rate.

Fugitive emissions from transfer of feed materials to storage may be controlled by wet suppression or by enclosure and ventilation to a fabric filter.

Particulate emissions from batch weighing and mixing of feed materials can be controlled by the installation of hoods over these operations to capture the emissions. The hoods are vented via duct work to fabric filters to remove the particulate.

The melting and refining furnace is the major point source of emissions for glass manufacture. Even though a furnace may be equipped with a particulate control device, fugitive emissions may result from leakage of gases through furnace openings, deteriorated furnace walls or from badly operated or maintained control devices. Therefore, fugitive emission prevention consists of preventive maintenance of the furnace and the particulate control system.

Preventive maintenance means the making of repairs to equipment before the need for them becomes apparent. In this instance, it would involve rebricking melting furnace walls before the furnace lining shows evidence of deterioration. For a control device, it would mean the regular periodic servicing of

associated equipment to prevent leaks or failure during operation. Examples would be the greasing of air blowers, periodic examination of blower blades for deterioration or solids build-up, bag replacement for a fabric filter and removal of solids build-up from the walls of a scrubber.

Particulate emissions are considered negligible from glass forming operations; and, thus, no fugitive emissions would be experienced. Gaseous emissions do occur but they are not in the venue of this report.

Depending upon the specific glass manufacturing facility, fugitive particulate emissions can also come from plant roadways and from outside storage piles. The control of such emissions is addressed in Section 2.1.

2.9.5 Recommended Reasonably Available Control Measures (RACM)

The recommended RACM for the control of each fugitive emission is listed in Table 2.9-2. The RACM's were selected on the basis of the degree of controls needed to meet state emission control regulations, practice of the industry, ease of application or installation and economics.

For raw materials receiving, enclosure with ventilation to a fabric filter is recommended on the basis of removal efficiency on the largest source of fugitive emissions.

Of the control alternatives for emissions control from feed materials transfer, wet suppression is selected on the basis of industrial practice, ease of application and expense.

Fabric filter installations are the only listed alternatives for feed materials weighing and mixing. Such installations are reasonable because they are practical for the process location, permit the captured emissions to be recycled and are reasonable in cost.

For the melting and refining furnace, preventive maintenance of the furnace and associated emissions control device, if any, is the only viable alternative. Such maintenance, as explained earlier, is designed to prevent breakdown of the equipment during production time. By servicing of the equipment at scheduled periodic intervals of production downtime, not only are fugitive emissions avoided but higher production may be realized due to a decrease of downtime caused by equipment failure.

REFERENCES FOR SECTION 2.9

1. Compilation of Air Pollutant Emission Factors (2nd Edition). AP-42, Section 8.13. U.S. Environmental Protection Agency, Office of Air Quality Planning and Standards, Research Triangle Park, North Carolina, December 1977.

2. Chemical Process Industries, Shreve, R.H. and Brink J.A., Jr., Fourth Edition, Chapter 11, 1977. p. 182.

3. Ibid. p. 187.

4. Kirk-Othmer, Encyclopedia of Chemical Technology, 2nd Edition, Volume 10, Interscience Publishers, New York. p. 549.

5. Op. cit. Reference 1. p. 8.13-1.

6. Op. cit. Reference 4. p. 549.

7. Op. cit. Reference 1. p. 5.16-1.

8. Source Evaluation in Region IV Non-Attainment Area to Determine TSP Emission Reduction Capabilities, PEDCo Environmental, Inc. for U.S. EPA under Contract No. 68-02-2603, Task 2, June 1978. p. 3-5.

9. Technical Guidance for Control of Industrial Process Fugitive Particulate Emissions, EPA-450/3-77-D10, March 1977. p. 2-283.

10. Ibid. p. 2-314.

11. Summary Report on Emissions from the Glass Manufacturing Industry. U.S. Environmental Protection Agency, Cincinnati, Ohio. EPA-600/2-79-101, April 1979. p. 28.

12. Glass Manufacturing Plants Background Information: Proposed Standards of Performance, Draft, EIS. U.S. Environmental Protection Agency. EPA-450/3-79-005a, June 1979. p. 3-20.

13. Op. cit. Reference 11. p. 39.

14. Op. cit. Reference 12. p. 3-22.

15. Op. cit. Reference 9.

16. Op. cit. Reference 11.

17. Op. cit. Reference 12.

18. Op. cit. Reference 11.

19. Op. cit. Reference 9. p. 2-38.

20. Op. cit. Reference 8. p. 2-87.

21. Op. cit. Reference 9. p. 2-294.

22. Ibid. p. 2-39.

23. Op. cit. Reference 11. p. 20.

24. Nonmetallic Minerals Industries Control Equipment Costs, Industrial Gas Cleaning Institute for U.S. EPA under Contract No. 68-02-1473, Task No. 19, February 1977. p. 4-9.

25. Ibid. p. 4-11.

26. Ibid. p. 3-3.

27. Ibid. p. 3-6.

APPENDIX FOR SECTION 2.9

Assume an average size plant = 150 tpd or 54,000 tpy glass

(1) Feed materials receiving
Emissions = (1.0 lb/ton)(54,000) = 54,000 lbs/yr

Closure

Capital cost = $28,000
Annual cost = 9,000

$$C/B = \frac{\$9,000/yr}{.5\ (54,000)} = \$0.33/lb$$

Closure, fabric filter

Capital cost = $93,000
Annual cost = 30,000

$$C/B = \frac{\$30,000/yr}{.9\ (54,000)} = \$0.62/lb$$

Choke-feeding

Capital cost = $33,000
Annual cost = $11,000

$$C/B = \frac{\$11,000/yr}{.7\ (54,000)} = \$0.29/lb$$

Wet suppression

Capital cost = $23,000
Annual cost = 7,000

$$C/B = \frac{\$7,000/yr}{.5\ (54,000)} = \$0.26/lb$$

Pneumatic unloading

Capital cost = $53,000
Annual cost = 22,000

$$C/B = \frac{\$22,000/yr}{.9\ (54,000)} = \$0.45$$

(2) Feed materials transfer to storage
Emissions = (0.5 lb/ton)(54,000) = 27,000 lbs/yr

Wet suppression

Capital cost = $23,000
Annual cost = $7,000

$$C/B = \frac{\$7,000/lb}{.5\ (27,000)} = \$0.52/lb$$

Area ventilation to fabric filter

Capital cost = $136,000
Annual cost = 49,000

$$C/B = \frac{\$49,000/yr}{.9\ (27,000)} = \$2.02/lb$$

(3) Feed material batch weighing
Emissions = (0.02 lb/ton)(54,000) = 1,080 lbs/yr

Fabric filter

Capital cost = $65,000
Annual cost = 21,000

$$C/B = \frac{\$21,000/yr}{.9\ (1,080)} = \$21.60/lb$$

(4) Feed materials mixing
Emissions = (0.04 lb/ton)(54,000) = 2,160 lbs/yr

Fabric filter

Capital cost = $65,000
Annual cost = 21,000

$$C/B = \frac{\$21,000/yr}{.9\ (2,160)} = \$10.80/lb$$

(5) Melting and refining furnace
Emissions = (0.15 lb/ton)(54,000) = 8,100 lbs/yr

Preventive maintenance of furnace and control device

Capital cost = Negligible
Annual cost = $25,000

$$C/B = \frac{\$25,000/yr}{.9\ (8,100)} = \$3.43/lb$$

(6) Glass forming
No control

2.10 FIBERGLASS MANUFACTURING

2.10.1 Process Description

The steps of manufacture employed to produce various forms of fiberglass are shown in Figure 2.10-1. Feed materials such as glass sand, alumina, borate and alkaline earths are delivered by truck or rail and are transferred to separate storage bins. The materials are metered from the bins to batch weigh hoppers in accordance with the following typical proportions:[1]

silicon dioxide	52 to 56 weight percent,
aluminum oxide	12 to 16 weight percent,
boron oxide	8 to 13 weight percent,
calcium oxide	16 to 25 weight percent,
sodium and potassium oxides	0 to 1 weight percent, and
magnesium oxide	0 to 6 weight percent.

After discharge into a revolving drum mixer, the materials are mixed for about 5 minutes and sent via conveyor and elevator to furnace feed hoppers where the batch mix is held until charged to the melting and refining furnace. The borosilicate glass mix is melted and maintained at about 2800°F[2] to lower viscosity and to enhance refining. The furnace normally used is the regenerative type described in Section 2.9.1; however, other furnaces used include recuperative and electric induction furnaces.

Furnace capacity varies from 50 to 200 tons per day.[3] The remaining steps of manufacture are dictated by the type of product which is desired. If textile fibers, staple yarns or mat products are wanted, glass melt from the refining furnace is formed into marbles which are melted in a small electric furnace and fed through a set of platinum bushings located at the furnace

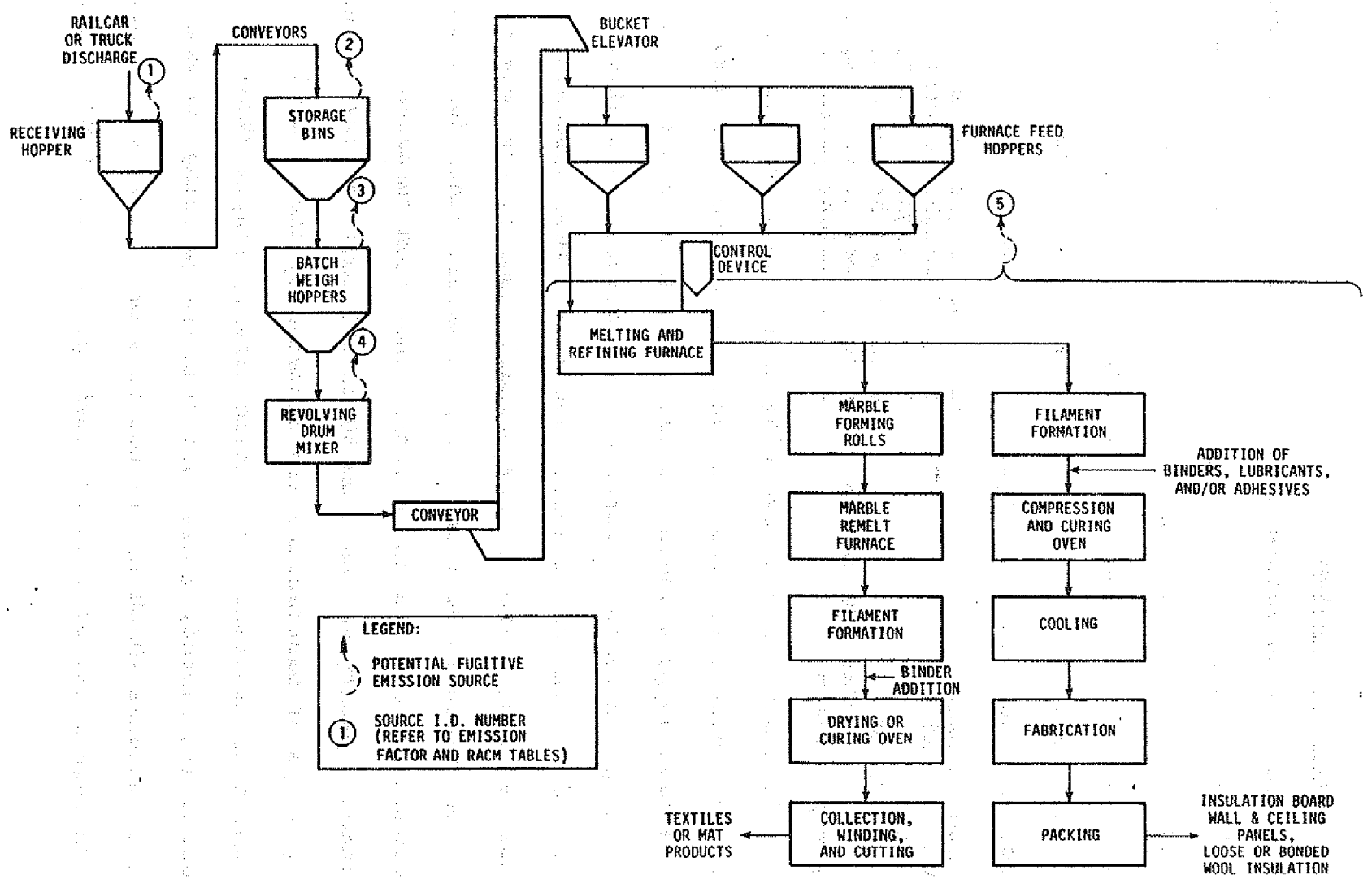

Figure 2.10-1. Simplified process flow diagram of fiberglass manufacture and associated fugitive particulate emission sources.

forehearth. Alternately, an air blower may be used to force the molten glass through small openings to form glass filaments which are drawn and collected by high speed winders. For manufacture of mat products, the filaments are made to form a mat which is conveyed through an oven prior to being slit or chopped to specified dimensions. The mat thus produced is rolled and packaged for shipment.

Should glass wool products be desired, the melt from the refining furnace is blown by air or steam jets through small holes in a platinum bushing located at one end of the furnace. The filaments so formed are caught by high-speed gas jets, pulled into fibers and collected on a moving belt. The resulting woolly mass is impregnated with organic binder material before being cured and formed into bats for use as insulation or set into frames for use as air filters.

Potential sources of fugitive particulate emissions from the plant include the following:

1. receipt of feed materials,
2. the transfer of received feed materials to storage bins,
3. weighing of materials,
4. the mixing of materials in a revolving drum, and
5. melting, refining and forming.

2.10.2 Fugitive Dust Emission Factors

Estimated fugitive emission factors for the operations associated with fiberglass manufacture are presented in Table 2.10-1. The literature surveyed contained no data for fugitive

TABLE 2.10-1. FUGITIVE DUST EMISSION FACTORS FOR FIBERGLASS MANUFACTURING

Source	Uncontrolled fugitive emission factor		
	lb/ton of glass produced	Reference	Reliability rating
1 Feed materials receiving	1.0[a]	4, 5	E
2 Feed materials transfer to storage	0.5[b]	6	E
3 Materials batch weighing	0.02[c]	7	E
4 Feed materials mixing	0.04[c]	7	E
5 Melting, refining and forming	1.0[d]	8	E

[a] Estimated average emission factor based upon similar materials, reference 4 for alumina (aluminum oxide) unloading; reference 5 for soda ash unloading.

[b] Estimated average factor based upon cement industry analogy from reference 6.

[c] Factors taken from cement industry in reference 7.

[d] Engineering estimate that fugitive emissions are 5 percent of uncontrolled emissions from furnace. Stack emissions per reference 8.

emissions. Therefore, the factors shown were either derived from analogous operations in other industries or estimated on the basis of engineering experience and judgment.

2.10.3 Particle Characterization

The particulate emitted from the feed materials handling portion of the plant is relatively large in size, 10 to 100 μm diameter,[9] and reflects in its composite the feed materials handled, i.e., sand, borate and boric acid.

Particulate from the melting furnace, however, is much smaller in size and is reported[10] to be primarily boric acid and alkali borates. Particle sizes are less than 1 μm in diameter.[11]

Particulate emissions from either glass filament or wool formation are fiberlike in nature, i.e., they are thin and elongated with a diameter of 0.05 to 3 μm.[12] They are identical in composition to the borosilicate glass being produced.

The toxicity of the emissions, whether gaseous or particulate, from any of the operations has not been established in the literature surveyed.

2.10.4 Control Methods

A summary of the fugitive emission control alternatives is given in Table 2.10-2. As can be noted from the table, fugitive emissions from feed materials handling may be controlled by a variety of methods. These methods are the same as those for glass manufacturing and are described in detail in Section 2.9.4.

TABLE 2.10-2. A SUMMARY OF THE CONTROL ALTERNATIVES, EFFICIENCIES AND COSTS, AND THE RACM SELECTIONS FOR FUGITIVE DUST EMISSIONS FROM SOURCES AT FIBERGLASS MANUFACTURING PLANTS

Fugitive dust sources	Control Alternatives	Control efficiency, %	Control costs $ (Jan. 1980)		Cost benefit, $/lb	RACM selection
			Capital	Annualized		
(1) Feed materials receiving	Closure	50[a]	28,000[b]	9,000[c]	0.33	Closure, fabric filter
	Closure, fabric filter	90[a]	93,000[b,n]	30,000[c,o]	0.62	
	Choke-feeding	70[d]	33,000[e]	11,000[c]	0.29	
	Wet Suppression	50[f]	23,000[g]	7,000[h]	0.26	
	Pneumatic unloading	90[d]	53,000[i]	22,000[j]	0.45	
(2) Feed materials transfer to storage	Wet suppression	50[f]	23,000[g]	7,000[h]	0.52	Wet suppression
	Area ventilation to fabric filter	90[k]	136,000[l]	49,000[m]	2.02	
(3) Feed materials batch weighing	Fabric filter	90[k]	65,000[n]	21,000[o]	21.60	Fabric filter
(4) Feed materials mixing	Fabric filter	90[k]	65,000[n]	21,000[o]	10.80	Fabric filter
(5) Melting and refining furnace, forming line	Preventive maintenance of furnace and control device	90[d]	Neg.[p]	25,000[q]	3.43	Furnace and control device preventive maintenance

[a] Estimated for partial closure based upon data in reference 13.
[b] Estimated per reference 14.
[c] Reflects enclosure maintenance estimated at 15 percent of investment cost and indirect costs estimated at 17 percent of investment.
[d] Estimated effectiveness based on engineering experience and judgment.
[e] Estimated per reference 15.
[f] Per reference 16. Method cited in reference 17.
[g] Estimated per reference 18 for one site of spray application and a rate of 50 tons per hour.
[h] Estimated per reference 19.
[i] Estimated for 500 cfm system.
[j] Estimated cost based upon engineering judgment.
[k] Combined efficiency of hood capture and fabric filter control.
[l] Per reference 20 for 20,000 cfm air flow.
[m] Per reference 21 for 20,000 cfm air flow.
[n] Per reference 20 for 10,000 cfm estimated air flow.
[o] Per reference 21 for 10,000 cfm estimated air flow.
[p] Increase of maintenance will not incur capital charges.
[q] Estimated costs for increased maintenance labor and materials.

2.10.5 Recommended Reasonably Available Control Measures (RACM)

The RACM recommended for the control of each fugitive particulate emission are shown in Table 2.10-2. The measures were selected after consideration of the various criteria to be satisfied, i.e., compliance with state emission control standards, ease of application or installation, and industrial practice.

For receipt of raw materials, an enclosure vented to a fabric filter is the selected RACM due to its effectiveness on the largest fugitive emission source.

Wet suppression is selected as RACM for feed materials transfer to storage. This control is presently employed in the industry[22,23] and is easy to apply at reasonable expense.

Fabric filter installations for emissions control at the feed materials weighing and mixing steps are recommended RACM since they are reasonable in cost, are suitable for the process location and permit recycle of the captured emissions to the process.

For the melting furnace and the filament formation and treating facilities, the maintenance of the equipment and their associated emission control devices to prevent emission leakage is the recommended RACM. Such maintenance on a regular scheduled basis will not only prevent fugitive emissions, but will extend the useful life of the equipment and permit higher equipment productivity due to avoidance of equipment failure.

REFERENCES FOR SECTION 2.10

1. Chemical Process Industries, Shreve, R.H. and Brink, J.A., Jr., Fourth Edition, Chapter 35, p. 617.

2. Compilation of Air Pollutant Emission Factors (2nd Edition). AP-42 Section 8.11, U.S. Environmental Protection Agency, Office of Air Quality Planning and Standards, Research Triangle Park, North Carolina, December 1977.

3. Glass Manufacturing Plants-Background Information: Proposed Standards of Performance, Draft EIS, U.S. EPA, Report EPA-450/3-79-005a, June 1979, p. 6-14.

4. Source Evaluation in Region IV Non-Attainment Area to Determine TSP Emission Reduction Capabilities, PEDCo Environmental, Inc. for U.S. EPA under Contract No. 68-02-2603, Task 2, June 1978, p. 3-5.

5. Op. cit. Reference 2, p. 5.16-1.

6. Technical Guidance for Control of Industrial Process Fugitive Particulate Emissions, EPA-450/3-77-010, March 1977, p. 2-283.

7. Ibid. p. 2-314.

8. Op. cit. Reference 2, p. 8.11-3.

9. Op. cit. Reference 6, pp. 2-7, 2-38, 2-221.

10. Op. cit. Reference 3, p. 3-16.

11. Op. cit. Reference 3, p. 3-20.

12. Evaluation of the Applicability and Feasibility of Control Measures for Particulate Emission Reduction from Microfiber Operations at Johns-Manville Corporation, Waterville, Ohio, by PEDCo Environmental, Inc., PN 5060-A, July 1979, p. 2-1.

13. Op. cit. Reference 6, p. 2-38.

14. Op. cit. Reference 4, p. 2-87.

15. Op. cit. Reference 6, p. 2-294.

16. Ibid., p. 2-39.

17. Summary Report on Emissions from the Glass Manufacturing Industry. U.S. Environmental Protection Agency, Cincinnati, Ohio, EPA-600/2-79-010. April 1979. p. 20.

18. Nonmetallic Minerals Industries Control Equipment Costs, Industrial Gas Cleaning Institute for U.S. EPA under Contract No. 68-02-1473, Task No. 19. February 1977. p. 4-9.

19. Ibid, p. 4-11.

20. Ibid, p. 3-3.

21. Ibid, p. 3-6.

22. Op. cit, Reference 6.

23. Op. cit. Reference 17, p. 28.

APPENDIX FOR SECTION 2.10

Assume an average size plant = 150 tpd or 54,000 tpy glass

(1) Feed materials receiving
Emissions = (1.0 lb/ton)(54,000) = 54,000 lbs/yr

Closure

Capital cost = $28,000
Annual cost = 9,000

$$C/B = \frac{\$9,000/yr}{.5\ (54,000)} = \$0.33/lb$$

Closure, fabric filter

Capital cost = $93,000
Annual cost = 30,000

$$C/B = \frac{\$30,000/yr}{.9\ (54,000)} = \$0.62/lb$$

Choke-feeding

Capital cost = $33,000
Annual cost = 11,000

$$C/B = \frac{\$11,000/yr}{.7\ (54,000)} = \$0.29/lb$$

Wet suppression

Capital cost = $23,000
Annual cost = 7,000

$$C/B = \frac{\$7,000/yr}{.5\ (54,000)} = \$0.26/lb$$

Pneumatic unloading

Capital cost = $53,000
Annual cost = 22,000

$$C/B = \frac{\$22,000/yr}{.9\ (54,000)} = \$0.45$$

(2) Feed materials transfer to storage
Emissions = (0.5 lb/ton)(54,000) = 27,000 lbs/yr

Wet suppression

Capital cost = $23,000
Annual cost = 7,000

$$C/B = \frac{\$7,000/lb}{.5\ (27,000)} = \$0.52/lb$$

Area ventilation to fabric filter

Capital cost = $136,000
Annual cost = 49,000

$$C/B = \frac{\$49,000/yr}{.9\ (27,000)} = \$2.02/lb$$

(3) Feed materials batch weighing
Emissions = (0.02 lb/ton)(54,000) = 1,080 lbs/hr

Fabric filter

Capital cost = $65,000
Annual cost = 21,000

$$C/B = \frac{\$21,000/yr}{.9\ (1,080)} = \$21.60/lb$$

(4) Feed materials mixing
Emissions = (0.04 lb/ton)(54,000) = 2,160 lbs/yr

Fabric filter

Capital cost = $65,000
Annual cost = $21,000

$$C/B = \frac{\$21,000/yr}{.9\ (2,160)} = \$10.80/lb$$

(5) Melting and refining furnace
Emissions = (0.15 lb/ton)(54,000) = 8,100 lbs/yr

Preventive maintenance of furnace and control device

Capital cost = Negligible
Annual cost = $25,000

$$C/B = \frac{\$25,000/yr}{.9\ (8,100)} = \$3.43/lb$$

2.11 SECONDARY ALUMINUM PROCESSING PLANTS

2.11.1 Process Description[1]

In secondary aluminum operations, aluminum scrap is melted and mixed with other metals to produce lightweight alloys for industrial castings. Copper, magnesium and silicon are the most common alloying constituents.

The raw materials for secondary aluminum plants come from three main sources:

1. Aluminum pigs. These may be primary metal or may be secondary aluminum produced by a large secondary smelter to meet more restrictive alloy specifications.

2. Foundry returns. These include rejected castings and mold components such as gates, risers, runners and sprues.

3. Miscellaneous scrap. This category includes aluminum borings and turnings; other items that may be contaminated with oil, grease, paint, rubber and plastics; and aluminum mixed with metals such as iron, magnesium, zinc and brass.

Figure 2.11-1 is a process flow diagram of secondary aluminum operations. The raw materials are sometimes pretreated to prepare them for smelting by removal of impurities such as oxides. Used castings and other foundry returns may be crushed or screened to facilitate the mechanical or magnetic removal of iron and the mechanical separation of dirt and loose aluminum oxide. Borings and turnings are heated in direct-fired rotary kilns to remove cutting oils, grease and moisture.

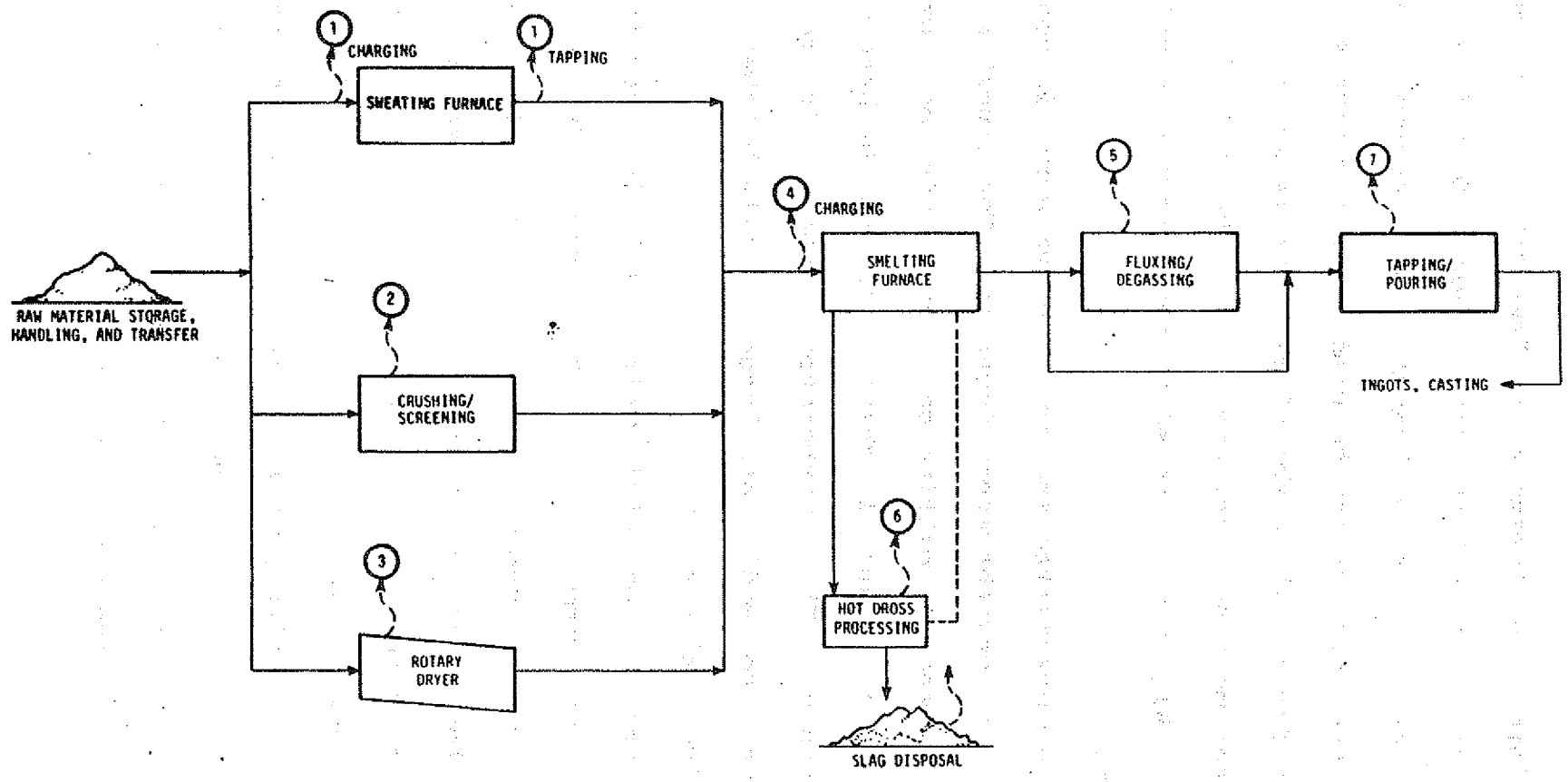

Figure 2.11-1. Simplified process flow diagram for secondary aluminum processing plants and associated fugitive particulate emission sources.

Another form of pretreatment is "sweating" to recover aluminum from scrap having a high iron content. Open-flame reverberatory furnaces with sloping hearths are in general use; although, grate-type furnaces may be used. The aluminum scrap is charged to the furnace where the aluminum melts and is collected while the higher melting iron, brass and other materials remain in solid form. Aluminum recovered by this process is referred to as "sweated" pig.

Smelting of pretreated and raw aluminum scrap is done in either crucible or reverberatory furnaces. The crucible or pot-type furnace is used for melting small quantities of aluminum (up to 1000 pounds) and is usually charged (loaded) by hand with pigs and foundry returns. The reverberatory furnace, with mechanical charging, is used for medium and large capacity batches. Both gas and oil-fired units are used.

After a batch is completely melted, alloying ingredients are added to adjust the composition of the product. The melt is then treated or "fluxed" to remove trapped gases and metals such as magnesium. Chlorine gas or other materials are used as fluxing agents. This process is carried out either in the smelting furnace, in a separate well in the furnace, or in a different unit. Often the fluxing process is referred to as degassing or demagging, depending upon its purpose. Degassing reduces dissolved gases. Demagging reduces the magnesium content of the melt. Chlorine can function as a fluxing agent to demag and

also to degas molten aluminum, depending on the nature of the chlorine material and the amount added.

Chlorine and fluoride fluxing are accomplished by introducing chlorine or fluoride through the molten metal to float the magnesium to the surface where it is removed with the dross or slag. The melt can also be degassed by bubbling chlorine through the molten metal bath.

Degassing can be accomplished by other methods, such as bubbling dry nitrogen through the melt, mechanical vibration or application of a vacuum.

After these operations, the metal is poured either into ingot molds for shipping or into preheated crucibles for product manufacturing and shipping.

The dross from the smelting furnace contains enough aluminum metal to justify its recovery. The two methods for recovering the metal are wet or dry milling (mechanical) or hot dross processing (pyrometallurgical). In wet milling, the cooled dross is ground, screened and magnetically separated. In dry milling the cooled dross is ground, screened and separated by air classification. In hot dross processing, materials that solubilize impurities are added to the molten dross. The insoluble aluminum metal is tapped off the bottom and returned to the smelting furnace.

A typical plant will have four or five furnaces and produce 100,000 to 1,000,000 pounds of aluminum per day.

Fugitive emissions are generated by several sources in secondary aluminum operations as indicated in Figure 2.11-1. They include raw material receiving and handling operations, the sweating furnace, scrap metal crushing and screening, scrap metal drying, smelting operations, hot dross handling and cooling, fluxing/degassing,hot metal pouring and slag disposal.

2.11.2 Fugitive Dust Emission Factors

The estimated emission factors for secondary aluminum processing plants are summarized in Table 2.11-1. According to the literature sources, these emission factors are all based on assumptions regarding the percentage of total process emissions that escape as fugitive particulates. No details were given regarding these assumptions. Therefore, the reliability of these estimates should be considered as very poor.

2.11.3 Particle Characterization

Particulates from the secondary aluminum smelting furnace are less than 2 μm in size. The particulates may have toxic properties because of fluoride and chloride content. Table 2.11-2 shows the effluent characteristics from secondary aluminum production.

TABLE 2.11-2. EFFLUENT CHARACTERISTICS FROM SECONDARY ALUMINUM PRODUCTION[4]

Source	Maximum particle size, μm	Chemical composition	Toxicity
Fluxing/degassing	2.0	Highly variable, may contain Al_2O_3, $AlCl_3$, NaCl, fluorides, oxides of alkali metals	Toxic due to fluorides and chlorides
Chlorination	1.0		

TABLE 2.11-1. FUGITIVE DUST EMISSION FACTORS FOR SECONDARY ALUMINUM PROCESSING PLANTS

Source	Emission factor	Reliability Rating	Reference
1 Sweating furnace charging and tapping	0.72 lb/ton metal processed	E	2
2 Crushing and screening scrap metal	Negligible	E	2
3 Rotary chip dryer	0.72 lb/ton metal dried	E	2
4 Smelting furnaces, charging and tapping			
4a. Reverberatory	0.22 lb/ton metal processed	E	2
4b. Crucible	0.09 lb/ton metal processed	E	2
4c. Induction	0.09 lb/ton metal processed	E	2
5 Fluxing (chlorination)	50 lb/ton chlorine used	E	2
6 Hot dross handling and cooling	0.22 lb/ton metal processed	E	2
7 Pouring hot metal into molds or crucible	Negligible	E	3
8 Slag disposal	Unknown	-	-

One study found that the major constituent in the fumes from salt-cryolite fluxing in a furnace was sodium chloride with considerable, but smaller, quantities of aluminum and magnesium compounds. The particles were all under 2 μm. The fumes were somewhat corrosive when dry, and when wet, formed a highly corrosive sludge that tended to set up and harden.[5]

Another study of fumes from degassing revealed that 100 percent of the fumes were smaller than 2 μm, and 90 to 95 percent were smaller than 1 μm. Microscopic examination indicated the mean particle size to be about 0.7 μm.[5]

Particle size data from an aluminum sweating furnace with a capacity of 760 lb/hr indicate that 95 percent of the particles are less than 39 μm.[6]

2.11.4 Control Methods[7]

Raw materials in the form of sheet castings, clippings and borings are normally received and stored inside a building. Therefore, the fugitive dust, if any, is confined; and no control is necessary.

In the dry milling process, dust generated at the crusher, the shaker screens and at the points of transfer can be controlled by hooding these operations and providing ductwork connections to a fabric filter.[2]

Emissions from the rotary dryer are usually vented to a scrubber system. Fugitive emissions could result from process leaks and may be controlled by improved maintenance and/or increased exhaust rate to the primary control device.

Emissions from sweating and smelting furnaces may be controlled by canopy hood capture and exhaust to the primary control device or a fabric filter or wet scrubber. Another system that may be used is building enclosure and evacuation to a control device. A total building evacuation system controls emissions from all operations within the building.

The emissions from fluxing operations can be captured by installing a hood above the fluxing operation and exhausting the hood to a baghouse or wet scrubber.[3,4]

Hot dross handling and cooling emissions can also be controlled by hood capture and venting to a fabric filter.[3] Slag disposal operations can be controlled by wet suppression.

Table 2.11-3 summarizes the available control techniques, their effectiveness, estimated costs and RACM selections.

2.11.5 Recommended Reasonably Available Control Measures (RACM)

The RACM selections for secondary aluminum processing plant fugitive emissions are presented in Table 2.11-3.

The RACM selection for the sweating and smelting furnaces is an extension or modification of the existing hoods to provide capture of charging and tapping emissions together with ductwork connections to the existing primary control device. Most furnaces are already controlled, and these measures would provide good control of the fugitive emissions at a relatively low cost. As an alternative, building enclosure with ventilation to a fabric filter is also selected as RACM.

TABLE 2.11-3. A SUMMARY OF THE CONTROL ALTERNATIVES, EFFICIENCIES AND COSTS, AND THE RACM SELECTIONS FOR FUGITIVE DUST EMISSIONS FROM SOURCES AT SECONDARY ALUMINUM PROCESSING PLANTS

Fugitive dust sources	Control alternatives	Control efficiency, %	Control costs, Jan. 1980 $		Cost benefit, $/lb	RACM selection
			Capital	Annualized		
(1) Sweating furnace charging and tapping	Hooding, vent to primary control device	95[a]	20,000[b]	5,000[c]	0.07	Hooding, vent to primary control device or new control device
	Building enclosure, vent to fabric filter	99[a]	600,000[d]	162,000[e]	0.87	
(2) Crushing and screening scrap metal	Hooding, vent to fabric filter	95[a]	63,000[d]	17,000[e]	NA	Hooding, vent to fabric filter
	Building enclosure, vent to fabric filter	99[a]	f	f	0.87	
(3) Rotary dryer	Hooding, vent to scrubber	95[a]	63,000[g]	30,000[g]	0.44	Afterburner
	Afterburner	90[a]	35,000[h]	21,000[h]	0.32	
(4) Smelting furnaces, charging and tapping						
4a Reverberatory furnace charging and tapping	Hooding, vent to primary control device	95[a]	20,000[b]	5,000[c]	0.24	Hooding, vent to primary control device or building enclosure, vent to fabric filter
	Building enclosure, vent to fabric filter	99[a]	f	f	0.87	
	Hooding, vent to scrubber or fabric filter	90[j]	336,000[j]	82,000[g]	4.13	
4b Crucible furnace charging and tapping	Hooding, vent to primary control device	95[a]	20,000[b]	5,000[c]	0.58	Hooding, vent to primary control device or building enclosure, vent to fabric filter
	Building enclosure, vent to fabric filter	99[a]	f	f	0.87	
	Hooding, vent to scrubber or fabric filter	90[j]	336,000[j]	82,000[g]	10.09	
4c Induction furnace charging and tapping	Hooding, vent to primary control device	95[a]	20,000[b]	5,000[c]	0.58	Hooding, vent to primary control device or building enclosure, vent to fabric filter
	Building enclosure, vent to fabric filter	99[a]	f	f	0.87	
	Hooding, vent to scrubber or fabric filter	90[j]	336,000[j]	82,000[g]	10.09	

(continued)

TABLE 2.11-3 (continued)

Fugitive dust sources	Control alternatives	Control efficiency, %	Control costs, Jan. 1980 $		Cost benefit, $/lb	RACM selection
			Capital	Annualized		
(5) Fluxing	Hooding, vent to scrubber or fabric filter	99[a]	175,000[g]	62,000[g]	1.37	Use of low emission fluxes or hoods, vent to scrubber or fabric filter
	Use of low emission fluxes	Unknown	i	i	NA	
(6) Hot dross handling and cooling	Hooding, vent to scrubber or fabric filter	95[a]	60,000[g]	27,000[g]	1.29	No control
	Building enclosure, vent to fabric filter	99[a]	f	f	0.87	
(7) Pouring hot metal into molds or crucible	Negligible source					No control
(8) Slag disposal	Wet suppression	Unknown	i	i	NA	No control

[a] Engineering estimate.

[b] Estimated costs of additional hooding and modifications.

[c] Estimated capital and maintenance charges at 20% of installed capital.

[d] Reference 8. Includes control of the sweating furnace, crushing and screening, scrap metal, furnace charging and tapping emissions, fluxing emissions, and hot dross handling and cooling emissions.

[e] Reference 9.

[f] Costs of this control technique are presented under the sweating furnace control costs.

[g] Reference 10.

[h] Reference 11.

[i] No cost data available.

[j] Reference 12. Based on control cost for comparable steel foundry furnace charging and tapping.

The control recommended for the crushing and screening of scrap metal is hooding and control of the captured emissions by a fabric filter. This has been demonstrated as being effective on existing operations.

An afterburner is the RACM selection for the rotary dryer. It is commonly used to thermally destroy both the condensible and hydrocarbon emissions in the dryer exhaust.

Fluxing emissions will usually be controlled along with the furnace emissions by the primary control device. However, where the fluxing station is separate from the furnace, the recommended RACM is adequate hooding with control by a wet scrubber or fabric filter. Use of fluxes that do not result in significant emissions is an alternate, acceptable control option.

No control is recommended for the hot dross processing or the hot metal pouring operations. These are very minor emission sources and are not normally controlled in the industry. Also, slag handling operations are minor and no control is recommended.

REFERENCES FOR SECTION 2.11

1. Technical Guidance for Control of Industrial Process Fugitive Particulate Emissions. PEDCo Environmental, Inc., Cincinnati, Ohio: prepared for EPA, Research Triangle Park, North Carolina, March 1977. pp. 2-164, 2-165.

2. Ibid. pp. 2-167, 2-168.

3. Air Pollution Engineering Manual, Second Edition, Davidson, J.A. (ed.). U.S. Environmental Protection Agency. Research Triangle Park, North Carolina. AP-40. May 1973. p. 286.

4. Particle Pollutant Systems Study. Vol. III. Handbook of Emissions Properties. Midwest Research Institute. Prepared for U.S. Environmental Protection Agency. Contract No. CPA 22-69-104. Durham, North Carolina. May 1971.

5. Op. cit. Reference 2. p. 289.

6. Multimedia Environmental Assessment of the Secondary Nonferrous Metal Industry. Vol. II. Final Draft. Radian Corporation. Austin. June 1976.

7. Op. cit. Reference 1. p. 2-270 through 2-172.

8. GARD, Inc. Capital and Operating Costs of Selected Air Pollution Control Systems. EPA-450/3-76-014, May 1976, pp. 4-24 to 4-28, 4-34 to 4-36, 4-89.

9. Ibid p. 4-89.

10. Industrial Gas Cleaning Institute. Air Pollution Control Technology and Cost in Seven Selected Areas. Prepared for the U.S. Environmental Protection Agency, Research Triangle Park, North Carolina. EPA 450/3-73-010. December 1973. pp. 586-599.

11. Op. cit. Reference 8. pp. 4-17, 4-89, 4-90.

12. PEDCo Environmental, Inc. Source Evaluation in Region IV Non-Attainment Areas to Determine TSP Emission Reduction Capabilities. Prepared for U.S. Environmental Protection Agency. Contract No. 68-02-2603, Task No. 2. Research Triangle Park, North Carolina. June 1978. p. 2-7.

APPENDIX FOR SECTION 2.11

Assume 550,000 lbs of metal processed per day, 365 dpy

(1) Sweating furnace charging and tapping
Emissions = (0.72 lb/ton)(550,000)(.005)(365)
= 72,270 lbs/yr

Hooding, vent to primary control device

Capital cost = $20,000
Annual cost = $6,000

$$C/B = \frac{\$5,000/yr}{.95\ (72,270)} = \$0.07/lb$$

Building enclosure, vent to fabric filter

Capital cost = $600,000
Annual cost = $162,000

$$C/B = \frac{\$162,000/yr}{.99\ (72,270 + 72,270 + 22,082 + 22,082)}$$

$$= \$0.87/lb$$

(2) Crushing and screening scrap metal
Emissions = Negligible

Hooding, vent to fabric filter

Capital cost = $63,000
Annual cost = $17,000
C/B = NA

Building enclosure, vent to fabric filter

See (1)
C/B = $0.87/lb

(3) Rotary dryer
Emissions = (0.72 lb/ton)(550,000)(365)(.0005) = 72,270 lbs/yr

Hooding, vent to scrubber

Capital cost = $63,000
Annual cost = $30,000

$$C/B = \frac{\$30,000/yr}{.95\ (72,270)} = \$0.44/lb$$

Afterburner

Capital cost = $35,000
Annual cost = $21,000

$$C/B = \frac{\$21,000/yr}{.9\ (72,270)} = \$0.32/lb$$

(4) Smelting furnaces, charging and tapping

Reverberatory furnace charging and tapping
Emissions = (0.22 lb/ton)(550,000)(365)(.0005) = 22,082 lbs/yr

Hooding, vent to primary control device

See (1)

$$C/B = \frac{\$5,000/yr}{.95\ (22,082)} = \$0.24/lb$$

Building enclosure, vent to fabric filter

See (1)
C/B = $0.87/lb

Hooding, vent to scrubber or fabric filter

Capital cost = $336,000
Annual cost = $82,000

$$C/B = \frac{\$82,000/yr}{.9\ (22,082)} = \$4.13/lb$$

Crucible furnace charging and tapping
Emissions = (0.09 lb/ton)(550,000)(365)(.0005) = 9,034 lbs/yr

Hooding, vent to primary control device

See (1)

$$C/B = \frac{\$5,000/yr}{.95\ (9,034)} = \$0.58/lb$$

Building enclosure, vent to fabric filter

See (1)
C/B = $0.87/lb

Hooding, vent to scrubber or fabric filter

Capital cost = $336,000
Annual cost = $82,000

$$C/B = \frac{\$82,000/yr}{.9\ (9,034)} = \$10.09/lb$$

Induction furnace charging and tapping
Emissions = (0.09)(550,000)(365)(.0005) = 9,034 lbs/yr

Hooding, vent to primary control device

See 1

$$C/B = \frac{\$5,000/yr}{.95\ (9,034)} = \$0.58/lb$$

Building enclosure, vent to fabric filter

See 1
C/B = $0.87/lb

Hooding, vent to scrubber or fabric filter

Capital cost = $336,000
Annual cost = $82,000

$$C/B = \frac{\$82,000/yr}{.9\ (9,034)} = \$10.09/lb$$

5 Fluxing

Assume 5,000 lbs/day chlorine
Emissions = (50 lbs/ton)(5,000)(365)(.0005) = 45,625 lbs/yr

Hoods, vent to scrubber or fabric filter

Capital cost = $175,000
Annual cost = $62,000

$$C/B = \frac{\$62,000/yr}{.99\ (45,625)} = \$1.37/lb$$

Use of low emission fluxes
No data

6 Hot dross handling and cooling
Emissions = (0.22 lb/ton)(550,000)(365)(.0005) = 22,082 lbs/yr

Hooding, vent to scrubber or fabric filter

Capital cost = $60,000
Annual cost = $27,000

$$C/B = \frac{\$27,000/yr}{.95\ (22,082)} = \$1.29/lb$$

Building enclosure, vent to fabric filter

See 1
C/B = $0.87/lb

(7) Pouring hot metal into molds or crucible

Emissions = Negligible
No control

(8) Slag disposal

Emissions = Unknown

<u>Wet suppression</u>
No data

2.12 FERTILIZER MIXING/BLENDING PLANTS

2.12.1 Process Description

The fertilizer mixing industry is divided into three categories according to the production technique employed: ammoniation-granulation, bulk blend and liquid mix plants. Within Ohio, there are 13 ammoniation-granulator facilities, 102 liquid mix plants and 260 bulk blending plants.[1] Since bulk blending plants have the greatest potential of fugitive particulate emissions, this process is addressed in this report.

Typical plant capacities range from 4 to 50 tons per hour, with an average of 20 tons per hour. Actual production is much lower. Plants produce an average of 1 ton per hour. Annual production ranges from 500 to 3500 tons per year, with an average plant production of 1270 tons per year. The greatest production (75%) occurs between January and June.[2]

Mixed fertilizers contain two or three of the nutrients nitrogen (N), phosphorus (P), and potassium (K). These mixtures are expressed as N-P-K grades. N represents the percentage of available nitrogen, P represents the percentage of available phosphorus pentoxide (P_2O_5) and K represents the percentage of soluble potassium oxide (K_2O). Over 75 percent of the mixed fertilizers consumed in this country contain all three of these primary plant nutrients.[3]

The bulk blending process in which feed materials are mixed to produce a balanced fertilizer is illustrated in Figure 2.12-1. The feed materials are dry and granular, and contain one or all

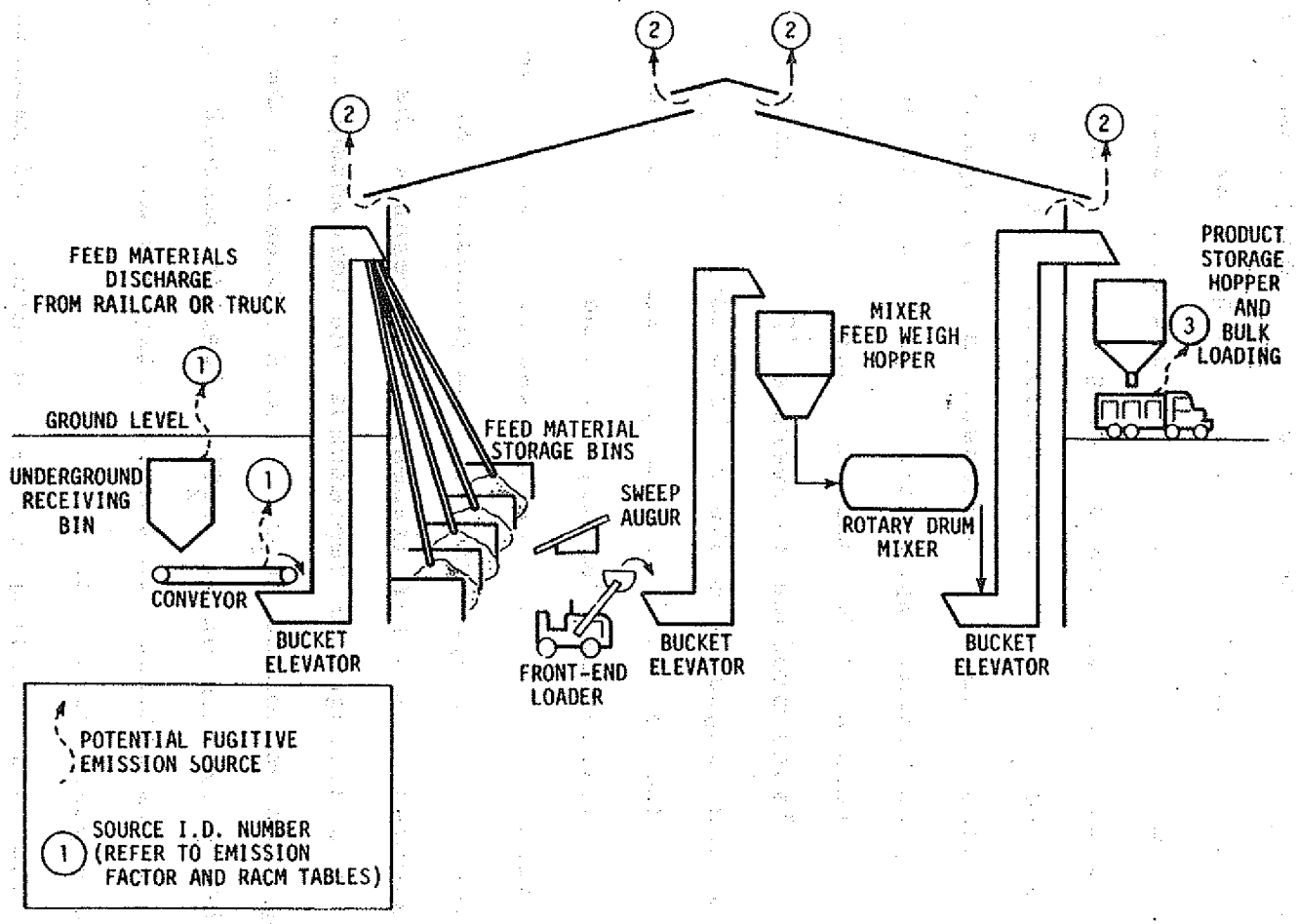

Figure 2.12-1. Typical flow diagram for fertilizer mixing/blending facilities and associated fugitive particulate emission sources.

of the primary plant nutrients. Normal and triple superphosphate, ammonium sulfate, urea and potash typify single nutrient feed materials. Mono or diammonium phosphate and potassium nitrate are typical multinutrient feed materials. In addition to these primary nutrients, micro-nutrients and organic herbicides are also frequently incorporated into fertilizers at the mixing and blending plant.

The feed materials are commonly received at the plant in hopper railcars which discharge into a receiving bin. The materials are transferred from the bin via belt conveyor to a bucket elevator for transfer by chute to specified storage areas or bins within the mixing building. As each feed material is needed, it is taken from bulk storage by a front-end loader or sweep auger and transferred to a bucket elevator. Material is then discharged into a weigh hopper for weighing, after which it is fed into a rotary-drum mixer. When the materials have been added for the desired mix formulation, the mixer drum is rotated until a uniform mixture is produced. The contents are then discharged and transferred by bucket elevator to storage hoppers from which the product can be either bulk loaded or bagged for shipping. Over half of the blending plants use a hopper-type loading station as shown in Figure 2.12-2. Bulk loading into open trucks can reportedly cause up to 75 percent of the emissions from bulk blending plants.[5]

The particulate emissions from bulk blending plants are fugitive in nature, and result from three sources:

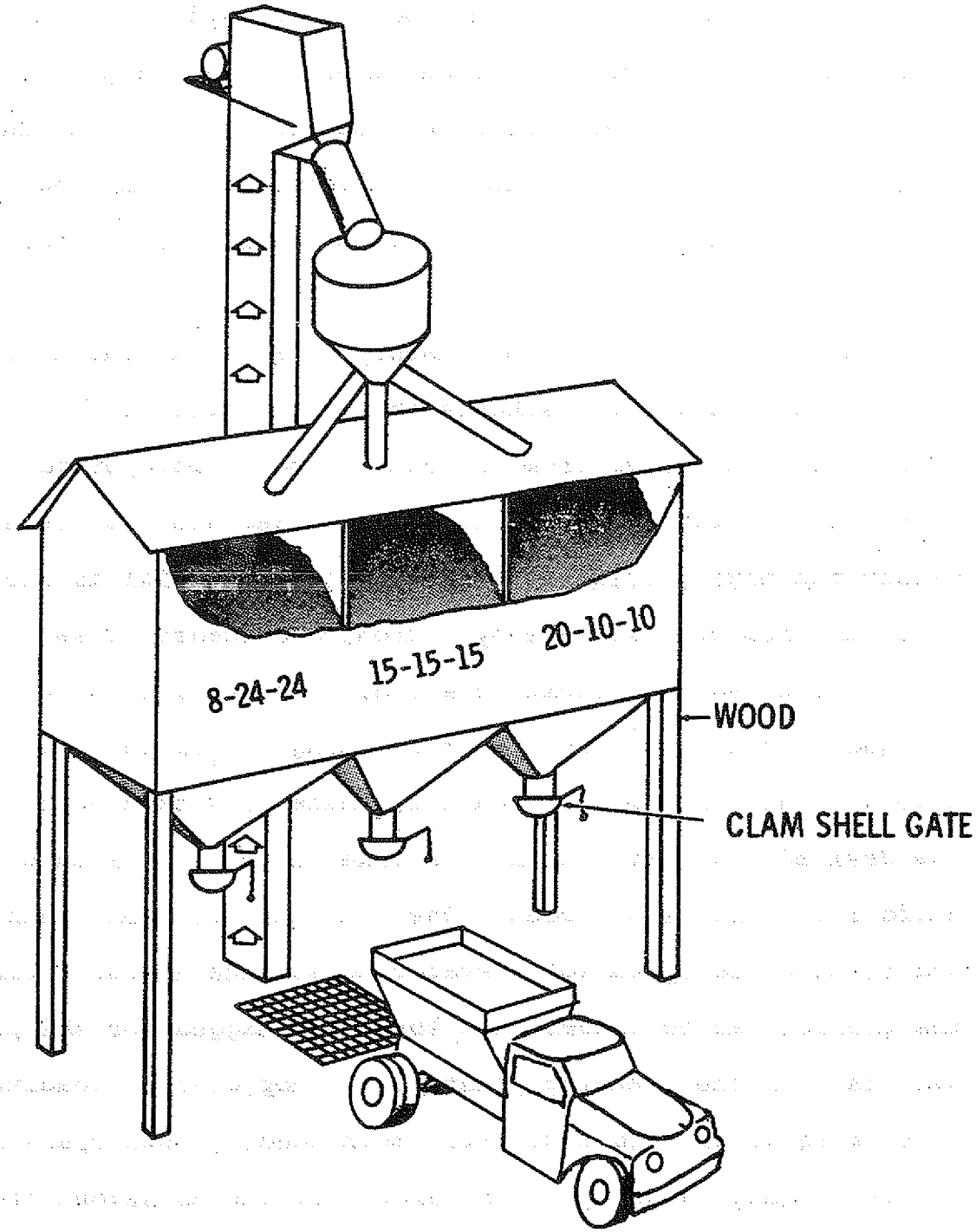

Figure 2.12-2. Bulk loading station with elevated storage used in fertilizer mixing/blending plants.[4]

1. rail car unloading and transfer to storage,

2. mixing building fugitive losses (caused by materials handling, mixing and bagging), and

3. loading operations (bulk loadout into open trucks).

A dust source that may also be found at fertilizer mixing and blending facilities is plant haul roads. This general emission category is addressed in Section 2.1.

2.12.2 Fugitive Dust Emission Factors

The particulate emission factors for fertilizer mixing and blending plant operations are presented in Table 2.12-1. The fugitive emission factors are based on particle size analyses (fraction smaller than 44 μm) of the raw materials used at bulk blending plants.[7] A worst-case estimate of emissions was then made. This estimate assumes that all material less than 44 μm is emitted to the atmosphere. No source test data are available.

2.12.3 Particle Characterization

Fugitive particulate emissions from fertilizer mixing and blending facilities are the same in composition as the feed materials (nutrients) input to the process. A composite threshold limit value (TLV) of 0.01 g/m^3 has been estimated for the nutrients used in bulk blending.[8] Herbicides also are used in fertilizer blending. The lowest TLV for commonly used herbicides is 0.0005 g/m^3.[9] However, since the emission factor for each herbicide never exceeds 0.001 percent of the total particulate emission factor, the concentrations are not expected to be at a level which would cause a health problem.[10]

TABLE 2.12-1. FUGITIVE DUST EMISSION FACTORS FOR FERTILIZER MIXING/BLENDING PLANTS

Source	Uncontrolled emission factor, lb/ton of product	Reference	Reliability rating[a]
1 Rail car unloading and transfer to storage	0.2	6	E
2 Mixing building[b] fugitive losses	0.2	6	E
3 Loading operations[c]	0.2	6	E

[a] Emission factors are reportedly ± 100 percent.[6]

[b] Mixing building fugitive losses (through windows or doors) are generated by materials handling, mixing and bagging.

[c] Bulk loadout into open trucks.

2.12.4 Control Methods

A summary of the fugitive emission control alternatives is presented in Table 2.12-2. The majority of bulk blending facilities do not employ particulate control technology.[19] With the advent of more stringent regulations, however, control methods must be considered.

Skirts around railcars have been used at bulk blending plants to reduce emissions generated during unloading.[20] Telescopic chutes can be used to control emissions generated during transfer of raw materials to storage.[21] An alternative to telescopic chutes is a series of hoods ducted to a central fabric filter. Such a system also would include hoods and ducts to capture emissions from material handling, mixing, bagging and truck loadout. (Figure 2.12-3 illustrates this system as well as the design of skirts around railcars.)

A wet suppression system also can be used to control fugitive emissions. Water, liquid fertilizer or lightweight oils (including used motor oils) can be used to control dust when sprayed on the bulk fertilizer or raw materials during handling, mixing or bagging.[21] Additions of 1 percent liquid fertilizer or 1/2 to 1 percent lightweight oil have been shown to be effective in reducing emissions.[21] Oil should not be applied to any fertilizer mixture containing over 60 percent ammonium nitrate because of the potential explosion hazard.[21] (Figure 2.12-4 depicts a typical wet suppression system.)

Modifications can be made to high-speed bucket elevators (centrifugal discharge) to reduce emissions. This type of elevator does not discharge all of the material. Some falls to the

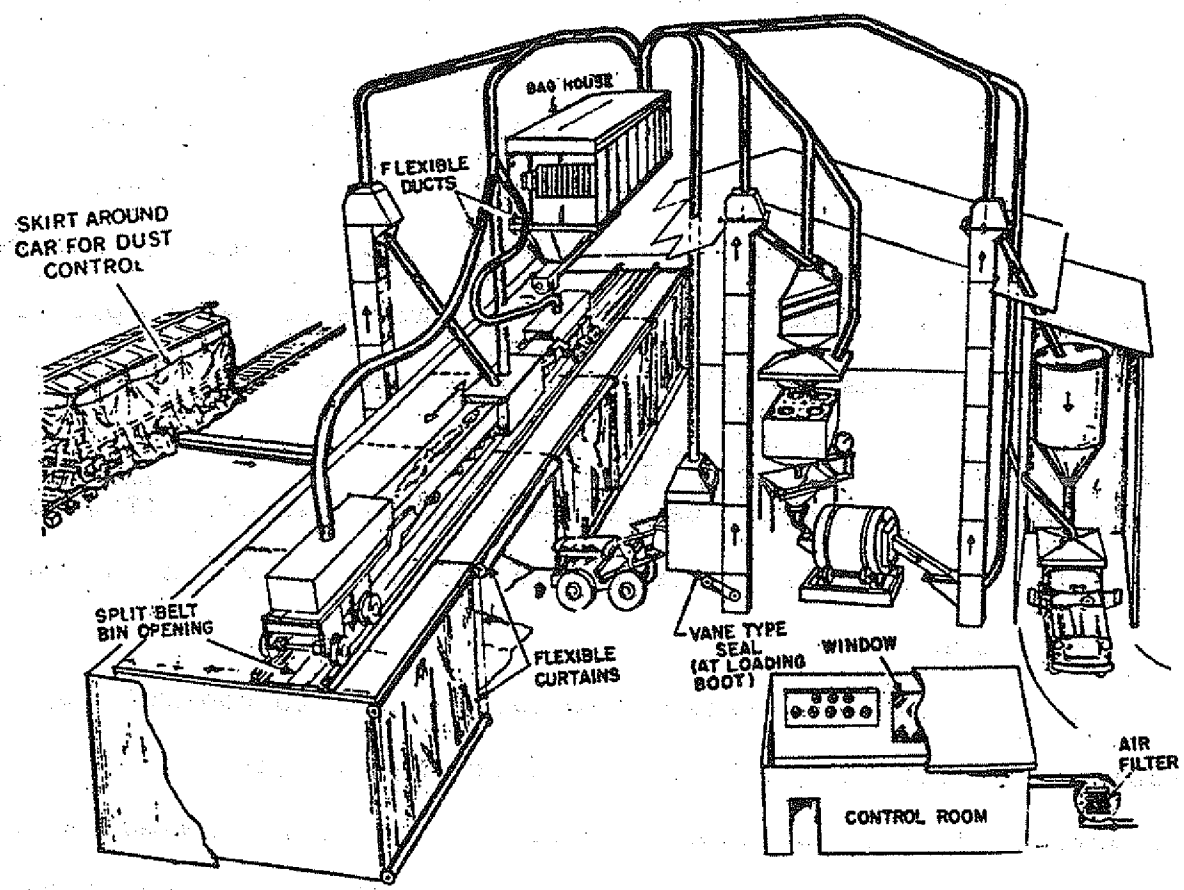

Figure 2.12-3. A bulk blending plant with fugitive dust emission controls consisting of skirts around railcar unloading and a series of hoods ducted to a fabric filter.[22]

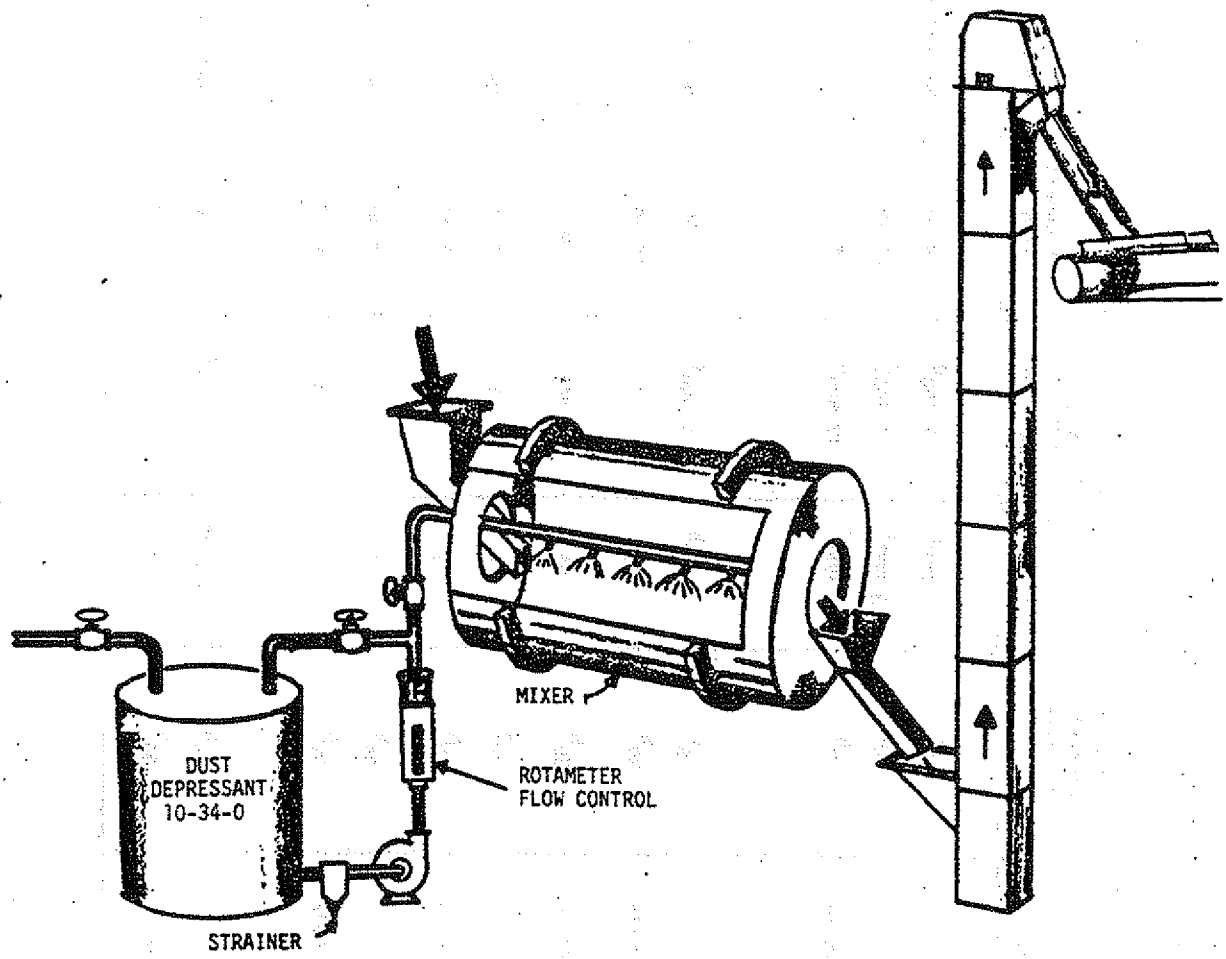

Figure 2.12-4. Dust suppressant application system.[23]

TABLE 2.12-2. A SUMMARY OF THE CONTROL ALTERNATIVES, EFFICIENCIES AND COSTS, AND THE RACM SELECTIONS FOR FUGITIVE DUST EMISSIONS FROM SOURCES AT FERTILIZER MIXING AND BLENDING PLANTS

Fugitive dust sources	Control alternatives	Control efficiency, %	Control costs $ (Jan. 1980)		Cost benefit,[a] $/lb	RACM selection
			Capital	Annualized		
1 Material handling						
- railcar unloading	Skirts around railcars	50[b]	6,000[c]	1,200[d]	18.50	No control
- transfer to storage	Telescopic chutes	75[b]	13,500[e]	2,700[d]	27.70	No control
	Hooding, vent to fabric filter	99[b]	76,000[f]	17,000[g]	26.40	
2 Mixing building fugitive losses						
- material handling	Wet suppression	75[b]	5,000[h]	1,350[i]	6.90	No control
	Hooding, vent to fabric filter	99[b]	j	j	26.40	
	Bucket elevator modification	50[b]	NA	NA	NA	
- mixing	Wet suppression	50[k]	l	l	6.90	No control
	Hooding, vent to fabric filter	99[b]	j	j	26.40	
- bagging	Wet suppression	95[k]	l	l	6.90	No control
	Hooding, vent to fabric filter	99[b]	j	j	26.40	
3 Loading operations						
- truck loading (bulk)	Telescopic chutes	75[b]	4,500[m]	900[d]	4.60	Telescopic chutes
	Hooding, vent to fabric filter	99[b]	j	j	26.40	

(continued)

TABLE 2.12-2 (continued)

[a] Cost analysis based on a plant production of 1300 ton/yr.

[b] Engineering estimate.

[c] Based on 6,000 ft^2 of skirt at $1.00/$ft^2$. Reference 11.

[d] Estimated capital and maintenance charges at 20% of installed capital.

[e] Estimated costs for three telescopic chutes. Reference 12.

[f] Estimated cost for hooding, ductwork and 6000 acfm fabric filter. References 13 and 14. Includes control of materials handling, mixing, bagging and truck loading.

[g] Estimated based on capital charges at 17% and 3000 hr/yr operation. Reference 15.

[h] Estimate includes pump, tank, controls, piping, valves and indirect capital charges at 40%. Reference 16. Includes control of mixing and bagging.

[i] Estimated based on capital charges at 17% and operating/maintenance at 10%.

[j] Costs for this control technique are included under transfer to storage hooding and vent to fabric filter.

[k] Reference 17.

[l] Costs for this control technique are included under material handling wet suppression.

[m] Estimated cost for one telescopic chute. Reference 18.

NA = Not available.

boot of the elevator and escapes. A low-speed product discharge elevator uses idling sprockets to cause the buckets to round the head sprocket, giving an almost complete upturn. This allows all of the material to be emptied through the discharge chute. (Both of these types of bucket elevators are shown in Figure 2.12-5.)

During bulk fertilizer loadout into open trucks, telescopic chutes can be used to reduce emissions.

2.12.5 Recommended Reasonably Available Control Measures (RACM)

The recommended RACM for control of each fugitive emission source is listed in Table 2.12-2. The RACM's were selected on the basis of the degree of controls needed to meet state emission control regulations, practice in the industry, ease of application or installation, and economics.

Since bulk fertilizer blending plants typically are small (low annual production rates), the control alternatives are somewhat limited. The annual emissions are relatively low, causing a high cost benefit ratio. Therefore, requiring control of many of the emission sources would cause an economic hardship on this industry.

It is recommended that a telescopic chute, or other type loading spout which reduces free-fall distance, be used for bulk fertilizer load-out. This control is recommended because bulk loadout has been identified as potentially the largest single emission source at these plants and because it is the most cost-effective control. No controls would be required on the other sources for most plants. However, wet suppression may be reasonable for larger facilities or those which pose a nuisance or complaint problem.

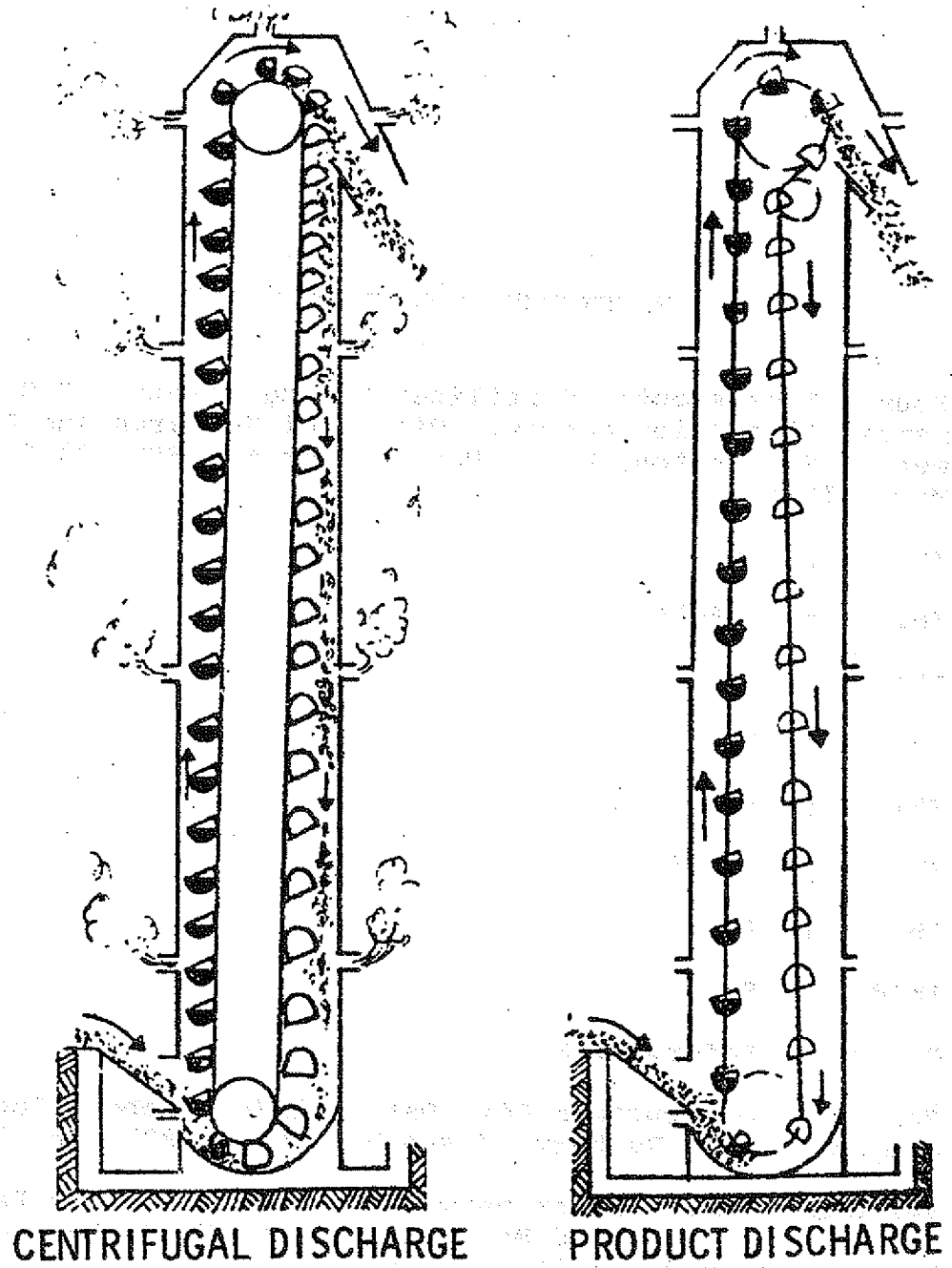

Figure 2.12-5. Bucket elevators used at bulk blending plants.[24]

REFERENCES FOR SECTION 2.12

1. Source Assessment: Fertilizer Mixing Plants. U.S. Environmental Protection Agency. Office of Research and Development. Washington, D.C. Publication No. EPA-600/2-76-032c. March 1976. p. 168.

2. Ibid. p. 46.

3. Ibid. pp. 15-16.

4. Ibid. p. 55.

5. Ibid. p. 54.

6. Ibid. p. 89.

7. Ibid. pp. 88-89.

8. Ibid. p. 92.

9. Ibid. p. 94.

10. Op. cit. Reference 8.

11. Building Construction Cost Data - 1978. Robert Snow Means Company, Inc. Duxbury, Massachusetts. 1977. p. 186.

12. Personal communication between Mr. Ron Pair, Ron Pair Enterprises, Inc. and Mr. John Zoller, PEDCo Environmental, Inc. October 26, 1976.

13. Capital and Operating Costs of Selected Air Pollution Control Systems. GARD, Inc. Prepared for the U.S. Environmental Protection Agency, Research Triangle Park, North Carolina. Publication No. EPA-450/3-76-014. pp. 4-24 through 4-35.

14. Nonmetallic Minerals Industries Control Equipment Costs. Industrial Gas Cleaning Institute. U.S. Environmental Protection Agency. Strategies and Air Standards Division. February 1977. p. 3-3.

15. Ibid. p. 3-5.

16. Op. cit. Reference 11. pp. 202 and 219.

17. Op. cit. Reference 1. p. 127.

18. Op. cit. Reference 12.

19. Op. cit. Reference 1. pp. 89 and 130.

20. Ibid. p. 130.

21. Op. cit. Reference 17.

22. Op. cit. Reference 1. p. 132.

23. Ibid. p. 129.

24. Ibid. p. 136.

APPENDIX FOR SECTION 2.12

(1) Material handling (Assume 1,300 tpy production)

Railcar unloading (Assume 1/2 of material handling emissions)
Emissions = (0.1 lb/ton)(1,300 tpy) = 130 lbs/yr

Skirts around railcars

$0.85/ft^2 (Means Bldg. Constr. Cost, 1978, p. 186)

$$\$0.85 \frac{(249.6)}{(218.8)} = \$1.00/ft^2$$

Assume skirt: (30' x 10' x 10' x 2) = 6,000 ft^2

Capital cost = ($1.00/ft^2)(6,000 ft^2) = $6,000

Annual cost (@ 17% for fixed costs and 3% for maintenance) = $6,000 (.2) = $1,200

$$C/B = \frac{\$1,200/yr}{.5\ (13)} = \$18.50/lb$$

Transfer to storage (Assume 1/2 of material handling emissions)

Telescopic chutes (Model D30-OT, 8 ft)

$$\text{Direct cost} = \$2,540 \frac{(249.6)}{(198.1)} = \$3,200$$

Indirect cost (@ 40%) = $1,280
Capital cost = $4,480 x 3 chutes = $13,500
Annual cost (@ 17% fixed, 3% maintenance)

= 0.2 (13,500) = $2,700

$$C/B = \frac{\$2,700/yr}{.75\ (130)} = \$27.70$$

Hooding, vent to fabric filter

Source
° Transfer to storage (@1,000 acfm)
(50 ft)($20/ft) = $1,000
(3 elbows)($260/elbow) = $780

° Material handling hood (@ 1,000 acfm)
Materials = $50
Labor = $190
Duct = (30 ft)($20/ft) = $600
Elbow = (1 elbow)($260/elbow) = $260

° Mixing (@ 1,000 acfm)
Hood = $240
Duct = (50 ft)($20/ft) = $1,000
Elbow = (2 elbows)($260/elbow) = $520

° Bagging (@ 1,000 acfm)
Hood = $240
Duct = (50 ft)($20/ft) = $1,000
Elbows = (2 elbows)($260/elbow) = $520

° Truck loading (@2,000 acfm)
Hood = $240
Duct = (60 ft)($20/ft) = $1,200
Elbows=(2 elbows)($260/elbow) = $520

$$\text{Duct cost} = \$8,360 \left(\frac{249.6}{192.1}\right) = \$10,860$$

Installation (@ 75%) = $8,150
Direct cost (@ 40%) = $7,600

Total duct cost ≈ $27,000

Baghouse cost (@ 6,000 acfm), NMI, p. 3-3

$$= \$40,000 \left(\frac{249.6}{204.1}\right) = \$49,000$$

Capital cost = $27,000 + $49,000 = $76,000

Annual cost:
Ductwork (@ 17% of capital) = $4,600

$$\text{Baghouse} = \$10,000 \left(\frac{249.6}{204.1}\right) = \$12,200$$

(from NMI, p. 3-5, @ 3,000 hpy)

Total cost = $17,000

Emissions = 0.1 + 0.2 + 0.2 lb/ton = 0.5 lb/ton
(total emissions from transfer to storage, mixing bldg. and loading)

$$C/B = \frac{\$17,000/\text{yr}}{.5\ (1,300)(.99)} = \$26.40/\text{lb}$$

(2) Mixing building fugitive losses

<u>Material handling</u>
Emissions = (0.2 lb/ton)(1,300 tpy) = 260 lbs/yr
Assume an average control efficiency of (.75 + .50 + .95)/3 = 73% or ∿ 75%

<u>Wet suppression</u> (Means, p. 219)

Pump, check valve, tank, STD controls
116 PM @ 35 psig, 60 gallon tank = $1,275
Tank installation cost (@75%) = $950
Piping - copper 3/4" = $3.78/LF installed, p. 202
Assume 100' piping; cost = $378

3 valves @ $11.15 (installed) = $35
Nozzles, misc. = $100

Installed cost = $2,736 $\frac{(249.6)}{(192.1)}$ = $3,555

plus indirect charges (@ 40%) = $5,000

Capital cost = $5,000

Annual cost:
- Capital charges (@ 17%) = $850
- Dust suppressant
  - if liquid fertilizer is used
  - if liquid fertilizer (18-46-0) = $0.094/lb
  - if dry bulk = $0.12/lb

The expense of the liquid fertilizer will be recovered in the cost of the bulk fertilizer.

∴additional cost of liquid fertilizer is negligible

O & M costs (@ 10%) = $500

Total annual costs = $1,350

$$C/B = \frac{\$1,350/yr}{(260)(.75)} = \$6.90/lb$$

<u>Hood, vent to fabric filter</u>
See 1

<u>Bucket elevator modification</u>
No data

<u>Mixing</u>

<u>Wet suppression</u>
See 2 material handling
C/B = $6.90/lb

<u>Hooding, vent to fabric filter</u>
See 1
C/B = $26.40/lb

<u>Bagging</u>

<u>Wet suppression</u>
See 2 material handling
C/B = $6.90/lb

<u>Hooding, vent to fabric filter</u>
See 1
C/B = $26.40/lb

(3) Loading operations

Truck loading (bulk)

Emissions = (0.2 lbs/ton)(1,300 tpy) = 260 lbs/yr

Telescopic chutes

Capital cost = $4,500 See (1)
Annual cost (@ 20%) = $900

$$C/B = \frac{\$900/yr}{.75\ (260)} = \$4.60/lb$$

Hooding, vent to fabric filter

See (1)
C/B = $26.40/lb

2.13 CEMENT MANUFACTURING AND BLENDING PLANTS

2.13.1 Process Description

Portland cement is used for making concrete for construction of many kinds of structures such as buildings, bridges and highways and for products such as concrete masonry, concrete pipe and many precast components for construction. Five types of Portland cement are produced in the United States to specifications which are governed by the desired characteristics, such as general construction, moderate heat release in massive structures, sulfate resistance or high early strength.

Raw materials include limestone, clay or shale, iron-bearing materials and siliceous materials. Table 2.13-1 lists the raw materials used in the production of Portland cement in the U.S. Most of these are taken from quarries by drilling and blasting procedures, then transported to crushers and screening plants. The product of these operations is transported to the storage facilities for continuation of the manufacturing process, which transforms these raw materials into a product known as "Portland cement clinker".

Dry Process - The raw materials are proportioned and conveyed to a drying/grinding unit where they are dried and ground either separately or simultaneously. The product of grinding is usually air classified (separated by size using the principles of air drag and particle inertia) before storage, with the oversize material returned to the grinding circuit. The product is then blended and stored before subsequent calcination.

TABLE 2.13-1. RAW MATERIALS USED IN PRODUCING PORTLAND CEMENT IN THE UNITED STATES[a,b]

Raw materials	1973 raw materials usage, 1000 Mg	1000 tons
Calcareous:		
Limestone (include aragonite)	78,652	86,699
Cement rock (includes marl)	23,647	26,067
Oystershell	4,667	5,144
Argillaceous:		
Clay	7,195	7,931
Shale	3,719	4,099
Other (includes staurolite, bauxite, aluminum dross, pumice and volcanic material)	218	240
Siliceous:		
Sand	1,862	2,053
Sandstone and quartz	679	748
Ferrous:		
Iron ore, pyrites, millscale and other iron-bearing material	878	968
Other:		
Gypsum and anhydrite	3,858	4,253
Blast furnace slag	619	682
Fly ash	271	299
Other	4	5
Total	126,269	139,188

[a] Includes Puerto Rico.

[b] Reference 1.

Wet Process - The raw materials are similar to the dry process, but generally include a naturally occurring wet marl or clay. Following the quarrying operation, they may be slurried in a wash mill and then ground to a high fineness with other raw materials, such as limestone, to produce a slurry with water. This slurry is blended through quality control procedures and fed to the rotary kiln, where the water is driven off and the raw mixture is calcined to form Portland cement clinker.

Calcination - The blended material (from either the wet or dry process) is fed directly to a long, inclined, rotating kiln or to a preheated system and then into the rotating kiln. The hot product of the calcination process, cement clinker, is discharged from the kiln and immediately cooled in the clinker cooler. After cooling, the clinker is combined with gypsum (about 5% by weight) and ground in rotary ball mills illustrated in Figure 2.13-1. The milled cement is air classified, and the oversized material returned to the mill. The cement is then stored to await packaging or bulk shipment by rail, barge or truck.

A process flow diagram for cement production is shown in Figure 2.13-2. Each potential process fugitive emission source is identified in the Figure. A dust source common to all cement producing facilities, but not specifically included in the figure, is plant roads. Proper evaluation of this emission category is explained in Section 2.1. In addition, limestone quarries, which are often an integral part of the cement facility,

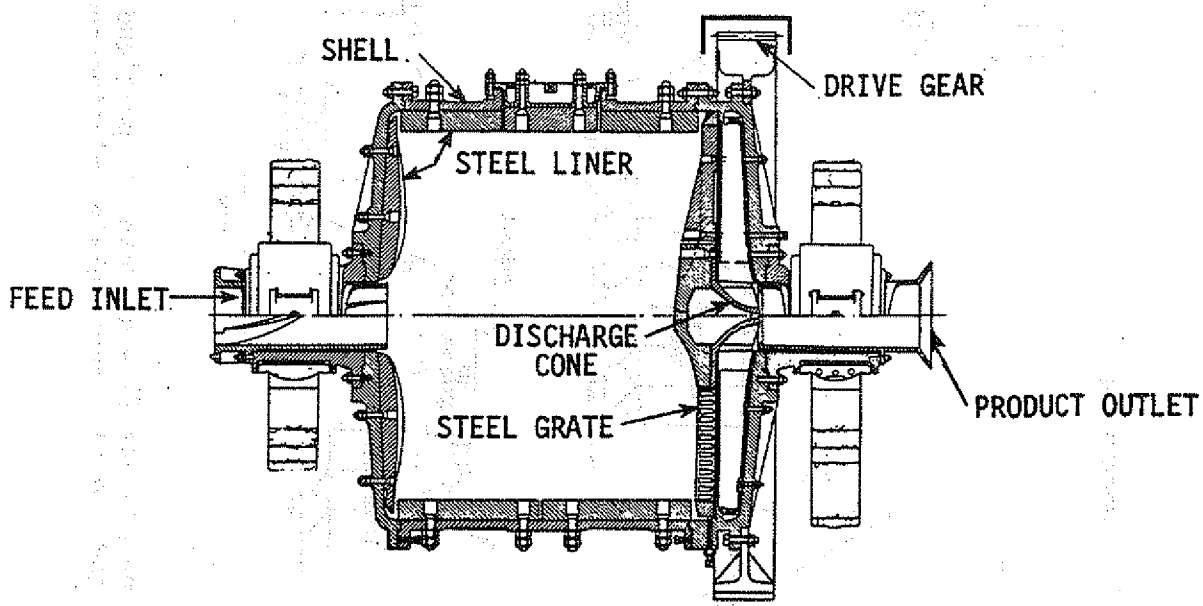

Figure 2.13-1. Typical rotary ball mill configuration.

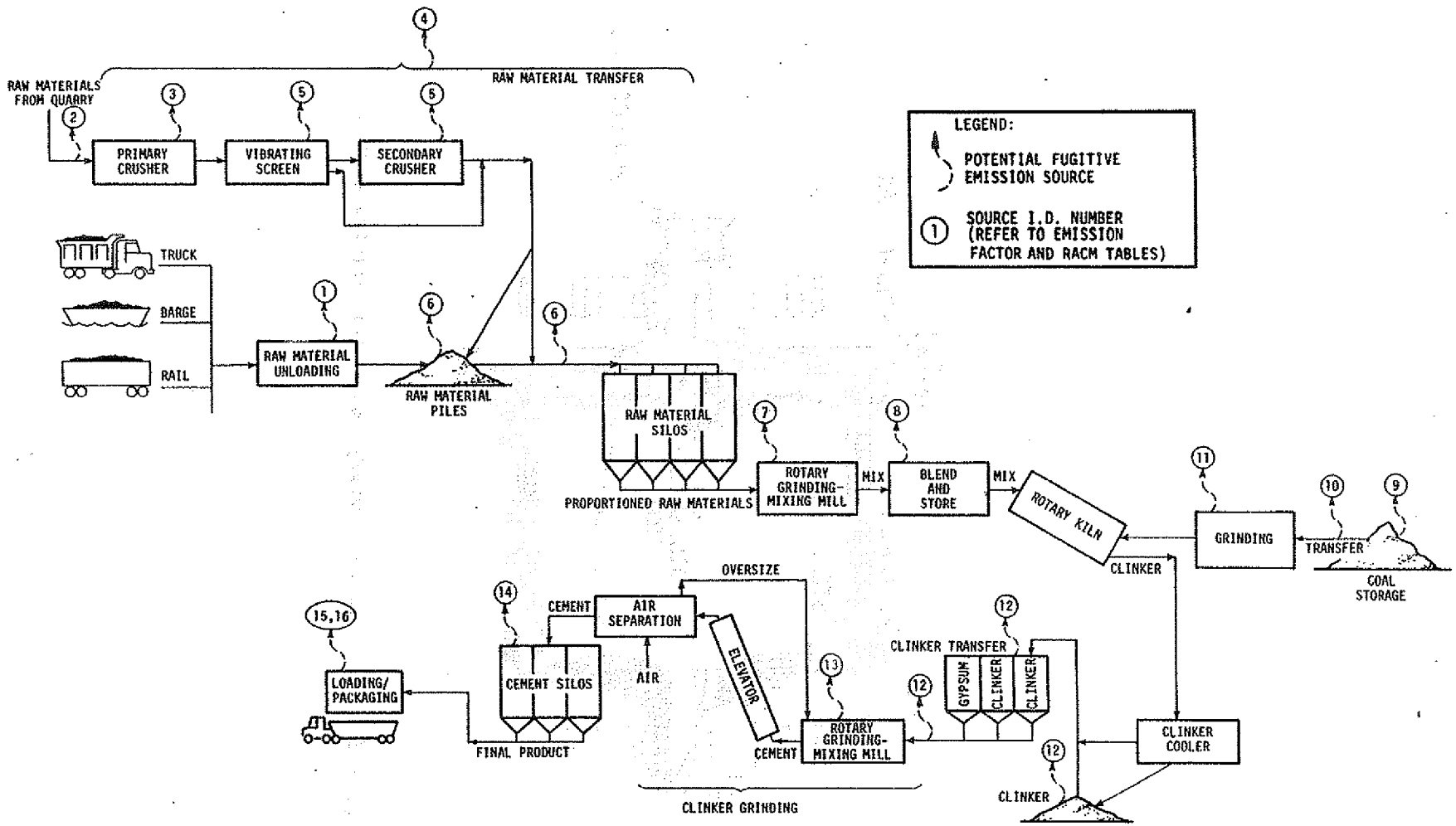

Figure 2.13-2. Simplified process flow diagram for portland cement production and associated fugitive particulate emission sources.

are not specifically included in this section. They are discussed separately, in detail, in Section 2.1.4.

2.13.2 Fugitive Dust Emission Factors

The estimated emission factors for cement production fugitive particulate emissions are presented in Table 2.13-2. All of these factors are based on either engineering judgment or visual observations as indicated by the references cited. No details are given on the methodology of development. The reliability of these types of estimates would be poor.

2.13.3 Particle Characterization

Fugitive particulate emissions from Portland cement production are composed of the same materials as handled in the various operations, but little information is available regarding the size range characteristics. The typical oxide composition ranges of clinker dust and cement dust are as follows.[6]

Compound	Fugitive emission oxide composition, percent by weight	
	Clinker dust	Cement dust
Silica	19-24	18-23
Al_2O_3	3-8	3-8
Fe_2O_3	1-5	1-5
CaO	62-69	61-66
MgO	0-5	0-5
SO_3	0-1	2-4
Free lime	0-2	0-2
Minor components	0-1	0-1

TABLE 2.13-2 FUGITIVE DUST EMISSION FACTORS FOR CEMENT PRODUCTION

Source	Emission factor	Reliability Rating	Reference
(1) Raw material unloading-gypsum, iron ore, clay, limestone, sand and coal	0.4 lb/ton coal unloaded 0.03 to 0.4 lb/ton other materials unloaded	E E	2 2
(2) Raw material charging to primary crusher	0.0003 to 0.04 lb/ton charged	D	3
(3) Primary crusher	0.5 lb /ton crushed	C	2,4
(4) Transfer and conveying	0.2 to 0.4 lb/ton handled	E	2
(5) Vibrating screen, secondary crusher	1.5 lb/ton screened, crushed	C	2,4
(6) Unloading outfall to storage	3.0 to 5.0 lb/ton unloaded	E	2
(7) Raw material grinding mill and feed/discharge exhaust systems	0.1 lb /ton milled	E	2
(8) Raw material blending and storage	0.05 lb /ton blended	E	2
(9) Coal storage	(See Table 2.2.1-1)	D	
(10) Coal transfer to grinding	0.2 lb /ton transferred	D	2
(11) Leakage from grinding	Negligible	E	2
(12) Clinker/gypsum outfall-unloading, storage, loadout	5.0 to 10.0 lbs/ton	E	2
(13) Finish grinding with mill leaks and feed discharge exhaust	0.1 lb /ton cement	E	2
(14) Cement silo vents	Negligible	E	2
(15) Cement loading	0.236 lb /ton loaded	E	5
(16) Cement packaging	0.01 lb /ton packaged	E	2

The American Conference of Governmental Industrial Hygienists has established levels for which airborne chemical compounds could be tolerated without adverse effect on humans.[7] Of the above compounds, aluminum oxide, iron oxide, magnesium oxide and free lime are considered nuisance substances which can be tolerated in large quantities. Silica may be hazardous depending upon the amount of quartz contained in the silica. Calcium oxide can be tolerated at levels up to 5 mg/m^3, and sulfur dioxide can be tolerated up to 13 mg/m^3.

2.13.4 Control Methods

Control techniques for raw material crushing and screening operations at cement plants are essentially the same as those described in Section 2.1. These operations are typically enclosed and often located subsurface, which further diminishes the potential for the escape of fugitive emissions. Water suppression via water sprays at the feed points of both primary and secondary crushing and screening operations are common. Hooding at bins, discharge points, and conveyor transfer points, which exhaust to primary fabric filters, are employed at some plants. Although coal dust can be collected by a fabric filter, the danger of an explosion must be noted.

Raw material and clinker handling results in fugitive emissions which are often controlled by the application of covers over transfer belts, or enclosing and/or hooding transfer points with exhaust to fabric filters. Properly designed hoods, used with 1000-4000 cfm fans, effectively control emissions.[8] Some

plants use telescoping or ladder chutes for stockpiling of material, which confine the material and reduce its free fall distance.[9] Wet suppression methods are also practiced, but may be limited for clinker and gypsum due to the impairment of material quality and handling properties which may result.

One plant has experimented with foam to control clinker handling emissions; however, the resulting increase of entrained air in the cement product has severely limited employment of this control technique thus far.[10] The abrasive nature of clinker also may cause maintenance/attrition problems with pneumatic transfer and exhaust system equipment (ductwork, fans, etc.). Lowering of duct velocities is a solution, but its use is limited since the collection efficiency is simultaneously impaired.

Conveying and transfer of the powdery cement product by belt conveyor and/or pneumatic conveying is most often well confined and controlled for both prevention of product loss and air pollution control. Control techniques are similar to those for clinker conveying as described above. Pneumatic transport system air is typically controlled by fabric filters.

Clinker storage is one of the major potential sources of fugitive dust at a cement plant. Most facilities have some type of structure for protecting the clinker from the weather; however, for the most part, these partial enclosures are not sufficiently confining to prevent fugitive emissions from windage and loading/unloading activities. Some plants employ open-ended structures with partial sidewalls for storage of clinker

and other materials. Such structures can become virtual wind tunnels during strong winds. The most effective control measure is complete enclosure of the storage area with ventilation to fabric filters.[9] One plant has a partially enclosed facility which employs a mobile clinker ladder exhausted to a fabric filter to practically eliminate emissions from unloading the clinker to storage.[10]

Emissions which escape from the hoods designed to capture emissions from raw material grinding and cement grinding mills, and their associated air separators and elevators, are significant at some plants because of the poor capture efficiency of the primary control system. These operations can be improved by increasing the blower head and vent rate of the primary control system and by redesigning the hooding.

Leaks in the ball mills, for example from worn-out rubber seals between the nuts and bolts which fasten steel plates to the inner walls of the mills, can be another significant emission source. A conscientious maintenance program is the best means for controlling these types of emissions.[11] These grinding mills are often located in an enclosed structure, which helps to prevent the escape of these emissions.

Cement storage silo vents (for the discharge of displacement air as cement is fed to the silos) are either uncontrolled, covered by fabric "socks", or exhausted to fabric filters which are part of the pneumatic conveying systems. The control trend is toward aspiration to fabric filters.

Cement loading operations for bulk truck, rail and ship/barge transport are typically gravity-feed systems which are partially enclosed (for truck and rail loading) or unconfined (for ship/barge loading). Cement packaging is often located in a building or partial enclosure. Some plants exhaust the cement dust, which is emitted with the displaced air during loading and packaging, to fabric filters; while others have no control system at all. A loading or packaging aspiration system which consists of a filling spout with an outer concentric aspiration duct to a fabric filter is being employed at an increasing number of plants. Section 2.1 provides further discussion on the general aspects of loading and associated control systems.

Most of the material collected by fabric filters at a cement plant is returned in a closed loop to its related process operation; however, when this collected material cannot be reused, disposing of it to waste storage areas by discharge and transport in open trucks, can be an intermittent yet severe problem. Wet suppression and enclosure of the unloading operation and covering of the truck can reduce these emissions. Control of waste disposal area emissions has been discussed in Section 2.1.

A conscientious housekeeping program involving the routine clean-up of spills from conveyor pick-up and transfer points, accumulation of leaks from grinding mills and similar sources exposed to wind erosion is a very important part of the cement facility's overall fugitive emissions control program.

Table 2.13-3 summarizes available control alternatives, their effectiveness, estimated costs, and RACM selections.

2.13.5 Recommended Reasonably Available Control Measures (RACM)

The RACM selections for control of fugitive particulate emissions from cement manufacturing and blending plants are presented in Table 2.13-3. Recommended control for raw material storage and handling (primary and secondary crushing/screening, grinding, conveying, etc.) is through use of a wet dust suppression system with a chemical wetting agent. This system provides good control effectiveness (approximately 90-95%) and reduces visible emissions significantly. Further justification for this measure, besides the economical aspect, is that it is already commonly used within Portland cement plants.

Recommended control for handling/storage of clinker and gypsum as well as the cement product is the construction of an enclosure with air (and dust) displacement to a fabric filter baghouse system. This is advantageous not only for its high degree of particulate control but also for the added benefit of product recovery. Wet suppression is not feasible due to the impairment of material quality and handling properties which can result. Greater product yield, which can stem from the employment of a fabric filter system, should aid to offset the high cost for such control.

TABLE 2.13-3. A SUMMARY OF THE CONTROL ALTERNATIVES, EFFICIENCIES AND COSTS, AND THE RACM SELECTIONS FOR FUGITIVE DUST EMISSIONS FROM SOURCES AT CEMENT MANUFACTURING AND BLENDING PLANTS

Fugitive dust sources	Control alternatives	Control efficiency, %	Control costs, Jan. 1980, $		Cost benefit, $/lb	RACM selection
			Capital	Annualized		
(1) Raw material unloading of gypsum, iron ore, clay, limestone, sand and coal	Enclosure, vent to fabric filters	99[a,b]	87,400[c]	21,000[d]	0.29	Wet suppression (chemical)
	Enclosure	50[e]	15,000[f]	2,600[g]	0.07	
	Wet suppression (chemical)	95[h,i]	64,000[j]	15,700[k]	0.004	
(2) Raw material charging to primary crusher	Enclosure, vent to fabric filter	95[l]	130,000[m]	33,000[n]	0.008	Wet suppression (chemical)
	Wet suppression (chemical)	90[o]	p	p	0.004	
(3) Primary crusher	Enclosure, vent to fabric filter	95[l]	q	q	0.008	Wet suppression (chemical)
	Wet suppression (chemical)	90[o]	p	p	0.004	
(4) Transfer and conveying (raw material)	Enclosure, vent to fabric filter	99[a]	q	q	0.008	Wet suppression (chemical)
	Wet suppression (chemical)	95[h]	p	p	0.004	
(5) Vibrating screen, secondary crushing	Wet suppression (chemical)	90[o]	p	p	0.004	Wet suppression (chemical)
	Enclosure, vent to fabric filter	95[l]	q	q	0.008	
(6) Unloading outfall to storage (raw material)	Enclosure, vent to fabric filter	99[a]	q	q	0.008	Wet suppression (chemical)
	Adjustable chutes	75[r]	(See Section 2.1)		NA	
	Wet suppression (chemical)	95[h]	p	p	0.004	
(7) Raw material grinding and feed/discharge exhaust systems	Wet suppression (chemical)	90[o]	p	p	0.004	Wet suppression (chemical) (dry process)
	Enclosure, vent to fabric filter	95[l]	q	q	0.008	No control (wet process)
(8) Raw material blending and storage	Wet suppression (chemical)	95[h]	p	p	0.004	Wet suppression (chemical) (dry process)
	Enclosure, vent to fabric filter	95[a]	q	q	0.008	No control (wet process)
(9) Coal storage Loading onto pile	Enclosure	70-99[r]	(See Section 2.1)		NA	Wet suppression (chemical)
	Wet suppression (chemical)	80-90[r]	(See Section 2.1)		NA	
	Adjustable chutes	75[r]	(See Section 2.1)		NA	

(continued)

TABLE 2.13-3 (continued)

Fugitive dust sources	Control alternatives	Control efficiency,%	Control costs, Jan. 1980, $ Capital	Control costs, Jan. 1980, $ Annualized	Cost benefit, $/lb	RACM selection
Wind erosion	Enclosure	95-99[r]	(See Section 2.1)		NA	Wet suppression (chemical)
	Wet suppression (chemical)	90[r]	(See Section 2.1)		NA	
	Watering	50[r]	(See Section 2.1)		NA	
	Wind screens	Very low	(See Section 2.1)		NA	
(10) Coal transfer to grinding	Wet suppression (chemical)	80-90[r]	(See Section 2.1)		NA	Wet suppression (chemical)
	Watering	50[r]	(See Section 2.1)		NA	
	Gravity feed onto conveyor	80[r]	s	s	NA	
(11) Leakage from grinding (coal)	Improved operation and maintenance program	Unknown	s	s	NA	Improved operation and maintenance program
(12) Clinker/gypsum outfall-unloading, storage, loadout	Adjustable chutes	75[r]	(See Section 2.1)		NA	Enclosure, vent to fabric filter
	Enclosure, vent to fabric filter	95-99[t]	130,000[m]	33,000[m]	0.01	
(13) Finish grinding with leaks from milling and feed/discharge exhaust systems	Enclosure, vent to fabric filter plus good operating program	95[l]	u	u	0.01	Enclosure, vent to fabric filter plus good operating program
	Pneumatic conveying	99[v]	99,000[w]	21,200[w]	0.48	
(14) Cement silo vents	Vent filter ("fabric socks")	99[x]	s	s	NA	Vent to fabric filter
	Vent to fabric filter	99[y]	u	u	0.01	
(15) Cement loading	Adjustable chutes	75[r]	(See Section 2.1)		NA	Vent to fabric filter
	Vent to fabric filter	99[y]	u	u	0.01	
(16) Cement packaging	Vent to fabric filter	99[a]	u	u	0.01	Vent to fabric filter
	Choked feed	75[r]	(See Section 2.1)		NA	

(continued)

TABLE 2.13-3 (continued)

[a] Reference 10.

[b] No visible emissions after control-Reference 11.

[c] Based upon 20' x 20' x 15' enclosure and a jet pulse baghouse treating 10,000 acfm @ 70° with a 6.5 to 1 air/cloth ratio.

[d] Reference 12. Based on 3000 h/yr operation.

[e] Estimate based on engineering judgment.

[f] Reference 13. Based on 20' x 20' x 30' enclosure.

[g] Includes capitalization charges only.

[h] Reference 14.

[i] Visible emissions reduced to 0% (5% opacity observed on rare occasions). Reference 15.

[j] Reference 16. Based on 75 ton/h throughput capacity. Includes application at unloading, primary crusher inlet and outlet, secondary crusher inlet and outlet, stockpile loadout and transfer points.

[k] Reference 17. Based on 3000 h/yr operation.

[l] Reference 18. Estimated dust control for crushing operations.

[m] Reference 19. Based on 20,000 acfm.

[n] Reference 20. Based on 3000 h/yr operation.

[o] Reference 21.

[p] Costs included within those for Source 1 - wet suppression. One system to control emissions from raw material processing, handling and storage.

[q] Costs included with those for Source 2 - enclosure/fabric filter. One system to control emissions from raw material processing, handling and storage.

[r] Reference 22.

[s] Costs not available.

[t] Assumed same as for raw material handling.

[u] Costs included within those for Source 12 - enclosure/fabric filter. One system to control losses from clinker/cement product storage and handling.

[v] Assumed with control of conveying air by fabric filter.

[w] Costs assumed same as for conveying of lime product (refer to Table 2.3-2-Source 6).

[x] Engineering judgment.

[y] Control efficiency assumed to be same as for raw materials storage and handling.

NA = Not available.

REFERENCES FOR SECTION 2.13

1. Ela, R.E. Cement. Minerals Yearbook, 1973. Volume 1 Metals, Minerals, and Fuels. U.S. Department of the Interior. Bureau of Mines. Washington, D.C. 1975.

2. Technical Guidance for Control of Industrial Process Fugitive Particulate Emissions. EPA-450/3-77-010, March 1977. pp. 2-283 thru 2-286.

3. Evaluation of Fugitive Dust from Mining, Task 1 Report. PEDCo-Environmental Specialists, Inc., Cincinnati, Ohio. Prepared for Industrial Environmental Research Laboratory/ REHD, U.S. Environmental Protection Agency, Cincinnati, Ohio. Contract No. 68-02-1321, Task No. 36, June 1976.

4. Compilation of Air Pollutant Emission Factors, AP-42. U.S. Environmental Protection Agency, Office of Air and Waste Management, Office of Air Quality Planning and Standards. Research Triangle park, North Carolina.

5. Personal Communication to John M. Zoller, PEDCo Environmental, Inc., from T.R. Blackwood, Monsanto Research Corporation, Dayton Laboratory, 1515 Nicholas Road, Dayton, Ohio. October 18, 1976.

6. Personal Communication from Mr. M. M. Reid, Assistant to Technical Director, Lone Star Industries, Inc. Cement and Construction Materials Group to Mr. Don Goodwin, U.S. Environmental Protection Agency, Emission Standards and Engineering Division, Research Triangle Park, North Carolina. January 12, 1977.

7. Threshold Limit Values for Chemical Substances and Physical Agents in the Workroom Environment. American Conference of Governmental Industrial Hygienists. Cincinnati, Ohio. 1976.

8. Inspection Manual for the Enforcement of New Source Performance Standards: Portland Cement Plants. PEDCo Environmental, Inc. Prepared for U.S. Environmental Protection Agency, Division of Stationary Source Enforcement. Contract No. 68-02-1355, Task No. 4. Washington, D.C. January 1975.

9. Koehler, Wilhelm and Gerhard Funke. Dust Controls in the Cement Industry of the German Federal Republic. Proceedings of the Second International Clean Air Congress. Academic Press. New York. 1971.

10. Op. cit. Reference 1. p. 2-292.

11. Ibid. p. 2-293.

12. Industrial Gas Cleaning Institute, Inc. Nonmetallic Minerals Industries Control Equipment Costs. Prepared for U.S. Environmental Protection Agency, Research Triangle Park, North Carolina. Contract No. 68-02-1473, Task No. 19, February 1977. p. 3-1.

13. PEDCo Environmental, Inc. Control Techniques for the Crushed and Broken Stone Industry, EPA Contract No. 68-01-4147 and 68-02-2603, Cincinnati, Ohio. July 1974. p. 3-38.

14. Op. cit. Reference 11. p. 3-5.

15. GARD, Inc. Capital and Operating Costs of Selected Air Pollution Control Systems. EPA-450/3-76-014, May 1976. p. 4-25.

16. Op. cit. Reference 11. p. A-13.

17. Op. cit. Reference 12. p. 3-39.

18. Op. cit. Reference 11. p. 4-8.

19. Ibid. p. 4-11.

20. Op. cit. Reference 1. p. 2-245.

21. Op. cit. Reference 11. p. 3-3.

22. Ibid. p. 3-6.

23. Op. cit. Reference 12. p. 3-15.

24. Op. cit. Reference 1. p. 2-38 and 2-39.

APPENDIX FOR SECTION 2.13

Average plant capacity = 444,525 tpy

(1) Raw material unloading

Emissions (coal unloading) = (0.4 lb/ton)(87,197 tpy)
= 34,880 lbs/yr

Emissions (other material unloading) = $\left(\frac{.03 + .4}{2} \text{ lb/ton}\right)$
(177,576 tpy) = 38,180 lbs/yr

Total emissions = 73,060 lbs/yr

<u>Enclosure, vent to fabric filter</u>

Capital cost = $87,400
Annual cost = $21,000

$$C/B = \frac{\$21,000/yr}{.99\ (73,060)} = \$0.29/lb$$

<u>Enclosure</u>

Capital cost = $15,000
Annual cost = $2,600

$$C/B = \frac{\$2,600/yr}{.5\ (73,060)} =$$

<u>Wet suppression (chemical)</u>

See (8)
C/B = $0.004/lb

(2) Raw material charging to primary crusher

Emissions = $\left(\frac{0.003 + 0.04}{2} \text{ lb/ton}\right)$(651,345 tpy) = 13,125 lbs/yr

<u>Enclosure, vent to fabric filter</u>

Capital cost = $130,000
Annual cost = $33,000

$$C/B = \frac{\$33,000/yr}{.95\ (13,125)} = \$0.008/lb$$

<u>Wet suppression (chemical)</u>

See (8)
C/B = $0.004/lb

(3) Primary crusher
Emissions = (0.5 lb/ton)(651,338 tpy) = 325,670 lbs/yr

Enclosure, vent to fabric filter

See (8)
C/B = $0.008/lb

Wet suppression (chemical)

See (8)
C/B = $0.004/lb

(4) Transfer and conveying (raw material)
Emissions = (0.3 lb/ton)(651,338 tpy) = 195,400 lbs/yr

Enclosure, vent to fabric filter

See (8)
C/B = $0.008/lb

Wet suppression (chemical)

See (8)
C/B = $0.004/lb

(5) Vibrating screen, secondary crushing
Emissions = (1.5 lb/ton)(651,175 tpy) = 976,760 lbs/yr

Enclosure, vent to fabric filter

See (8)
C/B = $0.008/lb

Wet suppression (chemical)

See (8)
C/B = $0.004/lb

(6) Unloading outfall to storage (raw material)
Emissions = (4 lb/ton)(650,687 tpy) = 2,602,750 lbs/yr

Enclosure, vent to fabric filter

See (8)
C/B = $0.008/lb

Adjustable chutes

NA (See Section 2.1)

Wet suppression (chemical)

See (8)
C/B = $0.004/lb

(7) Raw material grinding and feed / discharge exhaust systems
Emissions = (0.1 lb/ton)(649,387 tpy) = 64,940 lbs/yr

Wet suppression (chemical)

See (8)
C/B = $0.004/lb

Enclosure, vent to fabric filter

See (8)
C/B = $0.008/lb

(8) Raw material blending and storage
Emissions = (0.05 lb/ton)(649,355 tpy) = 32,470 lbs/yr

Wet suppression (chemical) (for sources (1) thru (8))

Capital cost = $64,000
Annual cost = $15,700

$$C/B = \frac{\$15{,}700/yr}{.95\ (73{,}060) + .9\ (13{,}125) + .9\ (325{,}670) + .95\ (195{,}400) + .9\ (976{,}760) + .95\ (2{,}602{,}750) + .9\ (64{,}940) + .95\ (32{,}470)}$$

$$= \$0.004/lb$$

Enclosure, vent to fabric filter (for sources (2) thru (8))

Capital cost = $130,000
Annual cost = $33,000

$$C/B = \frac{\$33{,}000/yr}{.95\ (13{,}125) + .95\ (325{,}670) + .99\ (195{,}400) + .95\ (976{,}760) + .99\ (2{,}602{,}750) + .95\ (64{,}940) + .95\ (32{,}470)}$$

$$= \$0.008/lb$$

(9) Coal storage

Loading onto pile

See Section 2.1

Wind erosion

See Section 2.1

(10) Coal transfer to grinding

See Section 2.1

(11) Leakage from grinding (coal)

<u>Improved operation and maintenance program</u>

No data

(12) Clinker / gypsum outfall - unloading, storage, loadout

$$\text{Emissions} = \left(\frac{5 + 10}{2}\ \text{lb/ton}\right)(446{,}059\ \text{tpy})$$

$$= 3{,}345{,}440\ \text{lbs/yr}$$

<u>Enclosure, vent to fabric filter</u>

See (16)
C/B = $0.01/lb

<u>Adjustable chutes</u>

See Section 2.1

(13) Finish grinding with leaks from milling and feed / discharge exhaust systems

Emissions = (0.1 lb/ton)(444,525 tpy) = 44,450 lbs/yr

<u>Enclosure, vent to fabric filter plus good operating program</u>

See (16)
C/B = $0.01/lb

<u>Pneumatic conveying</u>

Capital cost = $99,000
Annual cost = $21,200

$$C/B = \frac{\$21{,}200/\text{yr}}{.99\ (44{,}450)} = \$0.48/\text{lb}$$

(14) Cement silo vents
Emissions =(000.1 lb/ton)(444,500 tpy) = 44 lbs/yr

<u>Vent filter ("fabric socks")</u>

No data

<u>Vent to fabric filter</u>

See (16)
C/B = $0.01/lb

(15) Cement loading
Emissions = (0.236 lb/ton)(413,485 tpy) = 97,580 lbs/yr

Adjustable chutes

See Section 2.1

Vent to fabric filter

See (16)
C/B = $0.01/lb

(16) Cement packaging
Emissions = (0.01 lb/ton)(30,980 tpy) = 310 lbs/yr

Vent to fabric filter (for sources (12) thru (16))

Capital cost = $130,000
Annual cost = $33,000

$$C/B = \frac{\$33{,}000/yr}{.97\ (3{,}345{,}440) + .95\ (44{,}450) + .99\ (44)}$$

$$\frac{}{.99\ (97{,}580) + .99\ (310)}$$

C/B = $0.01/lb

Choke feed

See Section 2.1

2.14 FERROALLOY PRODUCTION

2.14.1 Process Description

Ferroalloy is a generic term for alloys containing iron and one or more other metals. Ferroalloys are used in steel production to introduce the nonferrous metals into the melt as alloying elements or deoxidants. The three basic types of ferroalloys are silicon-based including ferrosilicon and calciumsilicon, manganese-based including ferromanganese and silicomanganese, and chromium-based including ferrochromium and ferrosilicochrome. Other ferroalloys produced include ferrotitanium, ferrocolumbium, ferrotungsten and ferrovanadium.

While several processes are available to produce ferroalloys, electric smelting furnaces are used to produce over 75 percent of the total.[1] Thus, it is the process which will be described herein and is outlined in Figure 2.14-1. Other processes such as the electrolyte process and the vacuum process do not result in significant emissions of particulate matter.

As shown by the Figure, feed materials such as chrome ore, limestone, quartz (silica), coal, wood and scrap iron are typically unloaded from hopper cars and conveyed to outside storage piles. As needed, the materials are conveyed to a crusher, then screened and dried before being fed by conveyor and bucket elevator to feed storage bins. The materials are gravity discharged from the bins to a weigh feeder programmed for a specific blend of the feed materials. The weighed materials blend is

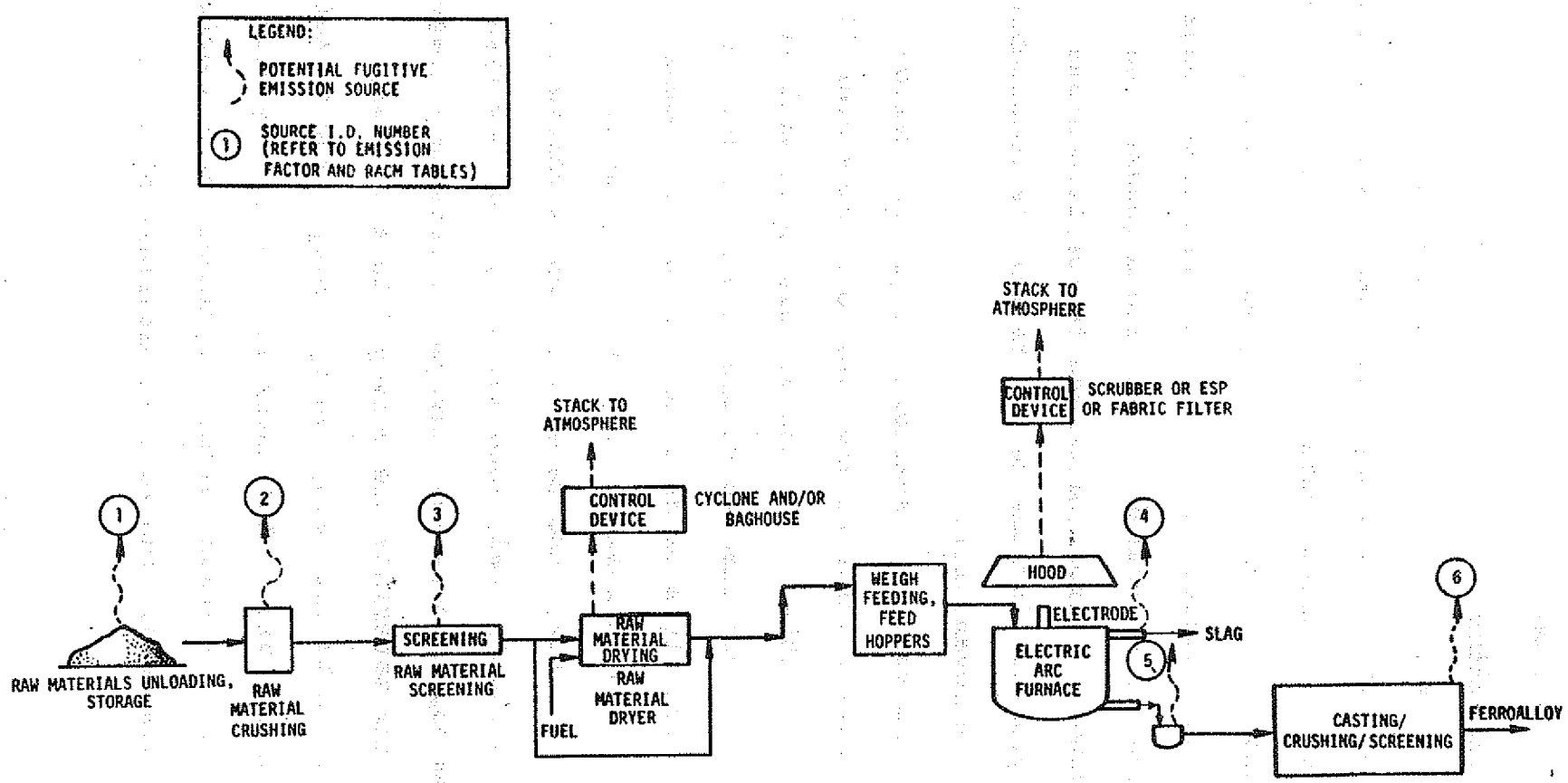

Figure 2.14-1. Simplified process flow diagram for ferroalloy production and associated fugitive particulate emission sources.

taken by bucket elevator and belt conveyor to charge hoppers from which it discharges by gravity into the smelting furnace.

In the electric submerged arc smelting furnace, carbon electrodes extend from the top of the furnace to near the bottom. A sketch of a typical furnace is shown in Figure 2.14-2.[2] Heat is generated by arcing of the electrodes to obtain temperatures of 4000 to 5000°F around the electrodes.[3] Such a temperature permits carbon reduction of the metallic oxides present and melts the feed materials charged to the furnace. Various impurities are trapped in the slag which floats on the molten ferroalloy collecting at the bottom of the furnace. The average smelting furnace production capacity is about 120 tons per day or 40,000 tons per year of ferroalloys.[4]

The molten product is tapped from the bottom of the furnace into a receiving ladle and is taken to the cast house where it is poured into molds, cooled to a solid form, crushed, screened to desired sizes, and stored. Product is taken from storage for packaging and shipment.

Several sources of fugitive particulate emissions exist at a ferroalloy manufacturing plant. As shown in Figure 2.14-1, these sources include the following:

1. feed materials unloading and storage,
2. feed materials crushing,
3. feed materials screening,
4. charging and smelting in an electric arc furnace,

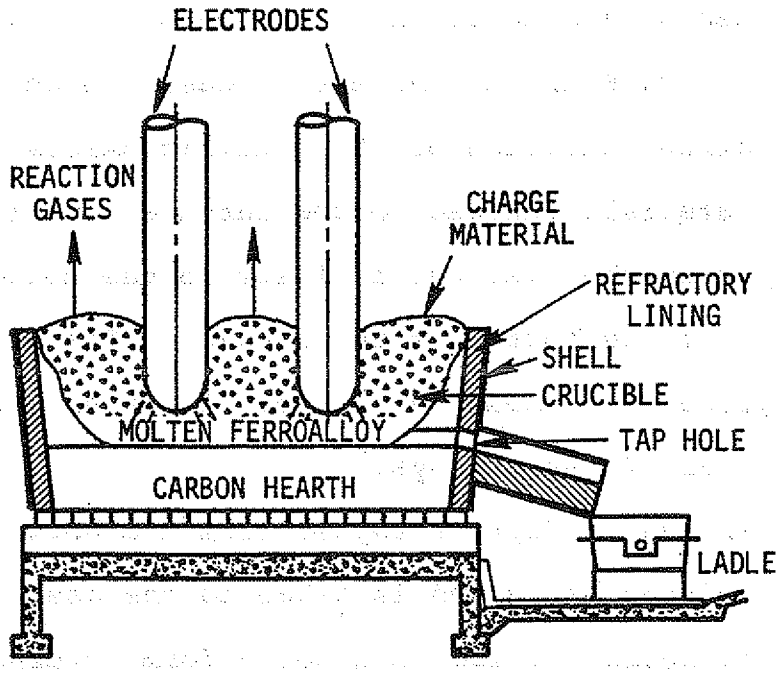

Figure 2.14-2. Submerged-arc furnace for ferroalloy production.[2]

5. furnace tapping, and

6. casting, crushing and screening.

Of these listed sources, the greatest source of fugitive particulate by far is the electric smelting furnace.

2.14.2 Fugitive Dust Emission Factors

The fugitive particulate emission factors for the various production steps are set forth in Table 2.14-1. The factors are based upon a study[5] of the ferroalloy industry and are considered of fair reliability.

As can be noted from the table, the fugitive emissions factor for electric arc furnace operation and tapping are larger than for the other sources. The values cited are median values for a semi-enclosed type furnace at which leakage occurs around the electrodes. The factor for ferrosilicon production is higher than for ferromanganese alloy because of the higher furnace temperatures required for its production.

The factor cited for the cast house is comprised of emissions from the casting operation and the product crushing and screening operations. No data were available to obtain separate emission factors for these sources.

2.14.3 Particle Characterization

The properties of particulates emitted into the atmosphere from raw material handling are similar to those of the feed materials. Dusts generated range in particle size from 3 to 100

TABLE 2.14-1. FUGITIVE DUST EMISSION FACTORS FOR FERROALLOY PRODUCTION

Source	Emission factor	Reliability rating	Reference
1 Raw materials unloading and storage	2.8 lb/ton stored	D	5
2 Raw material crushing	4.0 lb/ton crushed	D	5
3 Raw material screening	4.5 lb/ton screened	D	5
4 Furnace charging and melting	5.0[a] to 15.5[b] lb/ton melted	C	5
5 Furnace tapping	12.0 lb/ton tapped	D	5
6 Casting, crushing and screening			
6a. Casting	2.4 lb/ton cast	D	5
6b. Crushing/grinding product	7.2 lb/ton crushed or ground	D	5

[a] Use for FeMn alloy (semienclosed furnace).

[b] Use for FeSi (50%) alloy (semienclosed furnace).

microns[6] and have a bulk density of 35 to 100 pounds[6] per cubic foot.

Particulates emanating from the electric arc smelting, tapping and casting operations tend to be very small in size and are reported[7] to range in size from 0.1 to 1 micron in diameter. The particulate bulk density is low, 4 to 30 pounds[7] per cubic foot. The chemical composition varies depending upon the particular alloy being produced. Silicon alloys produce a gray fume containing a high percentage of silicon dioxide. Ferrochrome silicon alloys generate silicon dioxide and chromium oxide emissions. Ferromanganese alloy production produces a brown fume consisting of silicon dioxide and manganese oxides. An additional component of the particulate in all cases is carbon which comes from the carbonaceous reducing agents in the feed materials. Other alloys would also result in metallic oxide emissions (i.e., vanadium oxides, titanium oxides, etc.).

The crushing and screening of the product alloy emits metallic particulates that range in size from 3 to 100 microns.[8] The chemical composition of the dust is the same as that of the ferroalloy being produced.

The literature surveyed did not reveal any data concerning the toxicity of the particulate emitted. The gases evolved from a semi-enclosed arc furnace contain a large proportion of carbon monoxide.

2.14.4 Control Methods

The alternatives considered for the control of the various emission sources are presented in Table 2.14-2.

For the customary outside storage of feed materials, the use of wet dust suppression and wind breaks on the windward side of the piles is proposed.

For feed materials crushing and screening, emissions can be controlled by venting them through hoods to either mechanical collectors or fabric filters.

Fugitive emissions from a semi-enclosed smelting furnace can be controlled either by maintenance of the feed seal around the electrodes or by use of a back-up hood vented to a fabric filter or a combination of the two. These measures control only the fugitive emissions from around the electrodes. The point source gaseous effluent is routed to a control device such as a high pressure venturi scrubber or fabric filter which would exhaust via a stack to the atmosphere.

Emissions from tapping of the ferroalloy melt can be controlled by venting them via a hood installed above the tap and ductwork connected either to a separate fabric filter or to the existing main furnace effluent control device. However, in cases where a blowing tap occurs, control is infeasible due to the force with which the tap emissions are expelled.

The cast house fugitive emissions come from both ferroalloy casting operations and from product crushing and screening. Control of these emissions can be achieved either by the hooding

TABLE 2.14-2. A SUMMARY OF THE CONTROL ALTERNATIVES, EFFICIENCIES AND COSTS, AND THE RACM SELECTIONS FOR FUGITIVE DUST EMISSIONS FROM SOURCES AT FERROALLOY PRODUCTION PLANTS

Fugitive dust source	Control alternative	Control efficiency, %	Control costs, $ (Jan. 1980)		Cost benefit, $/lb	RACM selection
			Capital	Annual Operating		
(1) Raw materials unloading and storage	Wet suppression	50[a]	11,000[b]	7,000[c]	0.13	Wet suppression and wind breaks
	Wind breaks	40[d]	35,000[e]	7,000[f]	0.16	
(2) Raw materials crushing	Hood and vent to fabric filter	90[g]	61,000[h]	18,000[i]	0.13	Hood and vent to fabric filter
	Hood and vent to mechanical collectors	80[j]	30,000[k]	6,000[k]	0.05	
(3) Raw materials screening	Hood and vent to fabric filter	90[g]	61,000[h]	18,000[i]	0.11	Hood and vent to fabric filters
	Hood and vent to mechanical collectors	80[j]	30,000[k]	6,000[k]	0.04	
(4) Furnace charging (semi-enclosed type)	Feed seal maintenance	80[l]	Unknown	Unknown	Unknown	Back-up hoods with a fabric filter and feed seal maintenance
	Back-up hoods with a fabric filter	90[g]	61,000[h]	18,000[i]	0.03	
(5) Furnace tapping	Hoods and venting to new fabric filter	90[g]	600,000[m]	200,000[m]	0.46	Hood and duct into existing control device
	Hood and duct into existing control device	90[g]	Unknown	Unknown	Unknown	
(6) Casting, crushing and screening	Hood and duct crushing operations to a fabric filter	50[n]	130,000[o]	47,000[p]	0.18	Hood and duct crushing and screening operations to a fabric filter (no control for casting)
	Building ventilation to fabric filter	90[q]	390,000[r]	130,000[s]	0.38	

(continued)

TABLE 2.14-2 (continued)

[a] Estimated per reference 9.
[b] Estimated per reference 10 for one site of water spray application.
[c] Estimated per reference 11 for one site of water spray application.
[d] Estimated per reference 12.
[e] Estimated per reference 13 for concrete block walls on windward side of storage piles.
[f] Estimated for maintenance of wall and amortization of capital investment.
[g] Combined efficiency of hood capture of 90% and fabric filter retention of 99.9%.
[h] Per reference 14 for a fabric filter with an air flow of 10,000 scfm.
[i] Per reference 15 for a fabric filter with 10,000 scfm air flow and 8400 hours per year operation. Air flow rate is considered typical for this application.
[j] Efficiency estimated as combined efficiency of 90% for mechanical collector per reference 16 and of 90% for hood capture.
[k] Estimate based upon data of reference 17 adjusted for ambient temperature operations.
[l] Estimated efficiency.
[m] Per reference 18.
[n] Estimated efficiency of particulate collection compared to total emission generation in the cast house.
[o] Per reference 14 for 20,000 scfm exhaust air rate.
[p] Per reference 15 for 20,000 scfm exhaust air rate.
[q] Estimated capture efficiency for total building ventilation.
[r] Per reference 14 for 100,000 scfm estimated air flow rate.
[s] Per reference 15 for 100,000 scfm estimated air flow rate.

and venting of the specific sites of emission to fabric filters or by exhaust of the building air to a single large capacity fabric filter installation.

2.14.5 Recommended Reasonably Available Control Measures (RACM)

The recommended RACM for each of the listed emission sources is shown in Table 2.14-2. Selection was based on considerations of ease of installation, the meeting of state regulations and industrial practice.

For raw materials unloading and storage on outside piles, wet dust suppression in combination with wind breaks is recommended since it is easily accomplished and is readily available. Refer to Section 2.1 which deals with the control of dusting from plant roads and storage piles.

The use of fabric filters for emissions control from feed materials crushing and screening is recommended on the basis of industrial practice.[19] Such a control system can meet state emissions regulations concerning opacity and grain loading (0.030 gr/dscf). If it is practical at a given plant site, emissions from crushing and screening can be vented to a common dust collector to save the cost of two separate installations. The collected dust is easily recycled to the process stream, thus preventing loss of feed materials.

As noted in Table 2.14-2, the costs of maintaining the feed seals around the electrodes of a furnace are unknown. If it is assumed, however, that the incurred costs are nominal, then such

practice,in combination with the use of hoods and a fabric filter, is the preferred method of control.

Venting of emissions to the existing furnace control device the recommended RACM for melt tapping. The costs are unknown is since they would be highly variable from one installation to another. Also, this option may not be possible at some plants because of capacity limitations of the furnace control device or equipment configuration problems. In these cases, a new control device is recommended due to the significance of tapping emissions.

The collection and capture of emissions from specific points of generation (i.e., crushers, grinders, screens) is the recommended RACM for the cast house operations. The method is advocated because it maintains a cleaner environment within the building and avoids retrofit difficulties associated with installation of a very large fabric filter. No control is recommended for casting. The only viable control option for casting emissions is building evacuation to a fabric filter. However, this measure does not appear to be cost effective due to the large air exhaust volumes and the size of the fabric filter required. Furthermore, casting at a typical Ohio ferroalloy production plant is generally performed at a number of locations and buildings. Since the cost-benefit value presented for building evacuation to a fabric filter represents control for one building only, control of additional buildings where casting is performed would not be cost effective.

REFERENCES FOR SECTION 2.14

1. Compilation of Air Pollutant Emission Factors, Second Edition, AP-42, U.S. Environmental Protection Agency, April 1973. p. 7.4-1.

2. Engineering and Cost Study of the Ferroalloy Industry, U.S. Environmental Protection Agency, EPA-450/2-74-008, May 1974. p. V-2.

3. A Method for Characterization and Quantification of Fugitive Lead Emissions from Secondary Lead Smelters, Ferroalloy Plants, and Gray Iron Foundries, Prepared by PEDCo Environmental, Inc. for U.S. EPA, EPA-450/3-78-003, August 1978. p. 4-6.

4. Ibid, p. 4-5.

5. Op. cit. Reference 2, pp. VI-29, -31, -39, -41, -42.

6. Op. cit. Reference 2, p. VI-3.

7. Op. cit. Reference 2, p. VI-5.

8. Op. cit. Reference 2, p. VI-8.

9. Technical Guidance for Control of Industrial Process Fugitive Particulate Emissions. EPA-450/3-77-10, March 1977. p. 2-39.

10. Nonmetallic Minerals Industries Control Equipment Costs, Industrial Gas Cleaning Institute for U.S. EPA under Contract No. 68-02-1473, Task No. 19, February 1977. p. 4-9.

11. Ibid, p. 4-12.

12. Op. cit. Reference 9, p. 2-38.

13. Source Evaluation in Region IV Non-attainment Area to Determine TSP Emission Reduction Capabilities. Prepared by PEDCo Environmental, Inc. for U.S. EPA under Contract No. 68-02-2603, June 1978. p. 2-88.

14. Op. cit. Reference 10, p. 3-3.

15. Op. cit. Reference 10, p. 3-5.

16. Particulate Control Costs for Intermediate Sized Boilers, Industrial Gas Cleaning Institute for U.S. EPA under Contract No. 68-02-1473, Task No. 18, February 1977. p. 2-3.

17. Ibid, pp. 3-2 and 3-10.

18. Op. cit. Reference 2, p. IX-40.

19. Private communications with Mr. T.E. Casto, Ohio Ferroalloy Corporation, Canton, Ohio, by PEDCo Environmental, Inc., September 25, 1979.

APPENDIX FOR SECTION 2.14

Assume average throughput = 40,000 tpy

(1) Raw materials unloading and storage
Emissions = (2.8 lbs/ton)(40,000 tpy) = 112,000 lbs/yr

Wet suppression

Capital cost = $11,000
Annual cost = $7,000

$$C/B = \frac{\$7,000/yr}{.5\ (112,000)} = \$0.13/lb$$

Wind breaks

Capital cost = $35,000
Annual cost = $7,000

$$C/B = \frac{\$7,000/yr}{.4\ (112,000)} = \$0.16/lb$$

(2) Raw materials crushing
Emissions = (4.0 lbs/ton)(40,000 tpy) = 160,000 lbs/yr

Hood and vent to fabric filter

Capital cost = $61,000
Annual cost = $18,000

$$C/B = \frac{\$18,000/yr}{.9\ (160,000)} = \$0.13/lb$$

Hood and vent to mechanical collectors

Capital cost = $30,000
Annual cost = $6,000

$$C/B = \frac{\$6,000/yr}{.8\ (160,000)} = \$0.05/lb$$

(3) Raw materials screening
Emissions = (4.5 lb/ton)(40,000 tpy) = 180,000 lbs/yr

Hood and vent to fabric filter

Capital cost = $61,000
Annual cost = $18,000

$$C/B = \frac{\$18,000/yr}{.9\ (180,000)} = \$0.11/lb$$

Hood and vent to mechanical collectors

Capital cost = $30,000
Annual cost = $6,000

$$C/B = \frac{\$6,000/yr}{.8\ (180,000)} = \$0.04/lb$$

(4) Furnace charging and melting (semi-enclosed type)
Emissions = (15.5 lbs/ton)(40,000 tpy) = 620,000 lbs/yr

Feed seal maintenance
No cost data

Back-up hoods with a fabric filter

Capital cost = $61,000
Annual cost = $18,000

$$C/B = \frac{\$18,000/yr}{.9\ (620,000)} = \$0.03/lb$$

(5) Furnace tapping
Emissions = (12 lbs/ton)(40,000 tpy) = 480,000 lbs/yr

Hoods and venting to new fabric filter

Capital cost = $600,000
Annual cost = $200,000

$$C/B = \frac{\$200,000/yr}{.9\ (480,000)} = \$0.46/lb$$

Hood and duct into existing control device
No cost data

(6) Casting, crushing and screening
Emissions (casting) = (2.4 lbs/ton)(40,000 tpy) = 96,000 lbs/yr
Emissions (crushing & screening) = (7.2 lbs/ton)(40,000 tpy)
= 288,000 lbs/yr

Hood and duct crushing operations to a fabric filter

Capital cost = $130,000
Annual cost = $47,000

$$C/B = \frac{\$47,000/yr}{.9\ (288,000)} = \$0.18/lb$$

Building ventilation to control device

Capital cost = $390,000
Annual cost = $130,000

$$C/B = \frac{\$130,000}{.9\ (288,000 + 96,000)} = \$0.38/lb$$

2.15 METAL SALVAGE OPERATIONS

2.15.1 Process Description

Automobile shredding comprises the majority of metal salvage operations. Figure 2.15-1 illustrates the fundamental unit steps of this process and the potential sources of fugitive particulate emissions. Cars are first compacted, though not necessarily on site, to allow them to be fed into the shredder/hammermill. Additional engines, fuel tanks and other items are often enclosed in the auto prior to compacting to increase the metal weight for sale.[1] Compacted cars are then fed (often by crane) into the shredder. Combustible fluids (oils) are usually drained prior to compaction and shredding. Shredding without draining these fluids can result in fires or explosions when ignition occurs due to the friction and heat generated. Some shredders are equipped with water sprays that reduce both fugitive particulate emissions and heat.

Another source of fugitive emissions at metal salvage operations is the torching station where combustibles often are accidentally ignited during the removal of various auto parts with acetylene torches. These stations can result in significant emissions of smoke.

After shredding, the materials are transported, usually by belt conveyor, through vibrator (shaker) and magnetic separation equipment to remove ferrous material from nonferrous scrap. Ferrous material is transferred by stacker conveyor to open storage and may be loaded by front-end loader or by belt conveyor

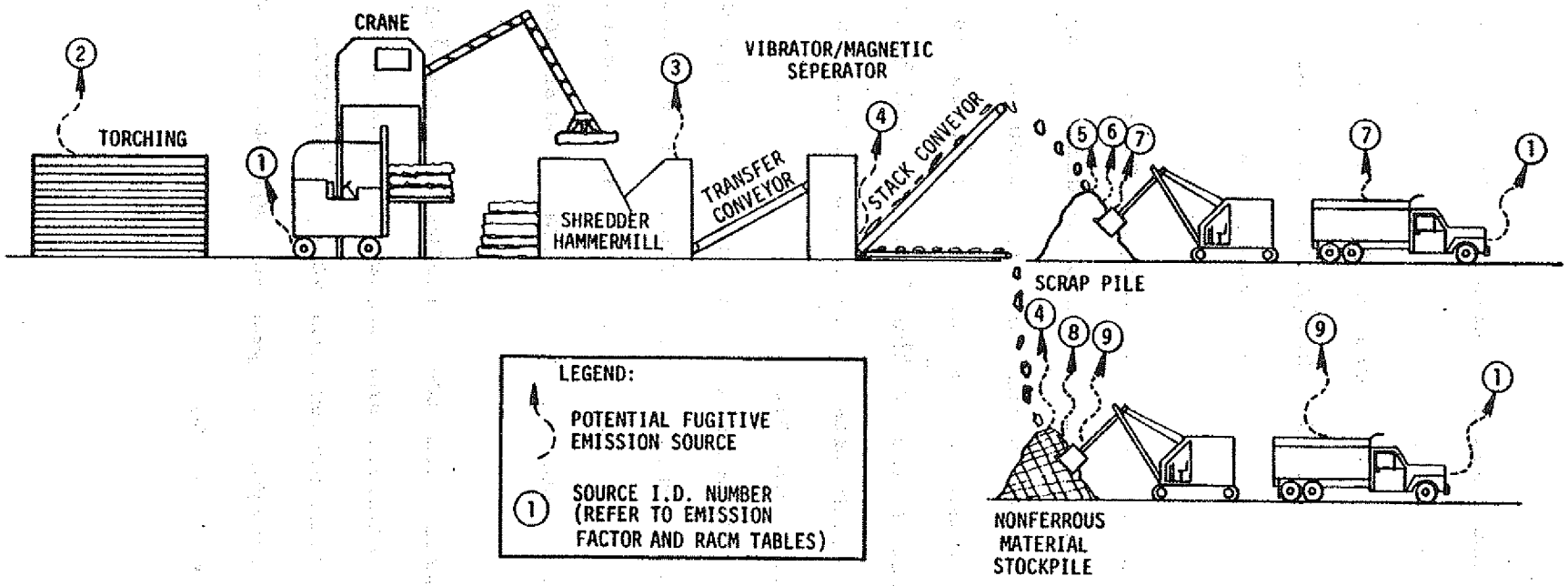

Figure 2.15-1. Process schematic for metal salvage/auto shredding illustrating potential fugitive particulate emission points.

onto truck, railcar or barge. Nonferrous scrap is stockpiled for eventual shipment to recycling or disposal.

2.15.2 Fugitive Dust Emission Factors

A survey of the literature revealed that there has been no effort to quantify the emissions from metal salvage operations. No specific emission factors were discovered that could even be considered as analogous operations. The development of reliable emission factors for metal salvaging operations would require a thorough testing program on several such operations. Given the dearth of emission data, no attempt was made to estimate fugitive emissions from metal salvaging operations.

2.15.3 Particle Characterization

Particle size and density data are not available for metal salvaging fugitive emission sources. While handling and storage of ferrous material contribute to fugitive dust emissions, handling and storage of nonferrous material and smoke from combustion in the shredding operation are the primary fugitive emission sources. Nonferrous particles consist predominately of fibrous material from seat cushion/upholstery (about 80 percent), rust (about 15 percent), and dirt or mud (about 5 percent).[2] Smoke due to combustion within the shredding operations has been observed to reach opacity levels of 80 to 90 percent as often as once or twice daily.[2]

2.15.4 Control Methods

Alternative control methods for the fugitive emission sources are presented in Table 2.15-1 along with their estimated

TABLE 2.15-1. A SUMMARY OF THE CONTROL ALTERNATIVES, EFFICIENCIES AND COSTS, AND THE RACM SELECTIONS FOR FUGITIVE DUST EMISSIONS FROM SOURCES AT METAL SALVAGE OPERATIONS

Fugitive dust sources	Control alternatives	Control efficiency, %	Control costs $ (Jan. 1980)		Cost benefit, $/lb	RACM selection
			Capital	Annualized		
(1) Hauling over unpaved surfaces	(See 2.1.1)	(See 2.1.1)	(See 2.1.1)	(See 2.1.1)	(See 2.1.1)	Oiling or paving
(2) Torching	Use of fire extinguishers	100	a	a	b	Use of fire extinguishers
(3) Shredder	Venting to wet scrubber	90[c] to 99+[c]	100,000[c]	36,000[c]	b	Drainage/removal of combustible fluids plus wet shredding and vent to wet scrubber
	Draining/removal of combustible fluids-wet scrubber	75[d] to 90[d]	-	120,000[d]	b	
	Wet suppression/cooling	50[f] to 75[f]	50,000[f]	11,000[f]		
(4) Magnetic separation/conveying of nonferrous material onto open storage pile	Withdraw lighter material by cyclone(s)/wet scrubber system; convey heavy fraction to storage pile	90 to 95[g]	300,000[g]	92,000[g]	b	Withdraw lighter material by cyclone(s)/scrubber system; convey heavy fraction to storage pile
	Enclosure (conveyor with telescopic chute)	(See 2.1.3)	(See 2.1.3)	(See 2.1.3)	(See 2.1.3)	
(5) Conveying of ferrous material onto open storage pile	Adjustable conveyor plus wet suppression	50[h] to 85[h]	1,200[h]	3,000[h]	b	Adjustable conveyor plus wet suppression
	Enclosure (conveyor with telescopic chute)	(See 2.1.3)	(See 2.1.3)	(See 2.1.3)	(See 2.1.3)	
(6) Ferrous scrap stockpile	Wet suppression	50[h]	1,200[h]	3,000[h]	b	Wet suppression
	Wind screens	Very low	a	a	b	
	Enclosures	95 to 99[i]	300,000,000[j]	a	b	
(7) Ferrous material handling and loadout	Operational control procedures and wet suppression	50[h] to 85[h]	1,200[h]	3,000[h]	b	Operational control procedures and wet suppression
	Enclosure (conveyor with telescopic chute)	(See 2.1.3)	(See 2.1.3)	(See 2.1.3)	(See 2.1.3)	
(8) Nonferrous material stockpile (if stored on-site)	Wet suppression	50[h]	1,200[h]	3,000[h]	b	Wet suppression
	Wind screens	Very low	a	a	b	
	Enclosures	95[i] to 99[i]	300,000[j]	a	b	
(9) Nonferrous material handling and loadout	Operational control procedures and wet suppression	50[h] to 85[h]	1,200[h]	3,000[h]	b	Operational control procedures and wet suppression
	Enclosure (conveyor with telescopic chutes)	(See 2.1.3)	(See 2.1.3)	(See 2.1.3)	(See 2.1.3)	

(continued)

TABLE 2.15-1 (continued)

[a] No costs available.

[b] Cost benefit not calculated due to lack of emission factor.

[c] Reference 3 and 4. Capital expenditure includes 1/8 inch thick carbon steel Venturi scrubber, elbow, separator, pumps, and controls (flange-to-flange). Operating costs based on approximately 50,000 acfm and 20 inch (ΔP) pressure drop.

[d] Estimated efficiencies based on process observation and engineering judgment. Smoke produced from friction created during shredding and resulting ignition of the fibrous upholstery material.

[e] Reference 1. Based on approximately 60,000 tons of scrap produced annually and an estimated prehandling cost of the compacted autos of $2 per ton.

[f] Reference 5. Estimated dust control efficiency (75 percent) by manufacturer for adapting water spray system within dry shredding mill. Installed capital cost averaged from estimated $25,000 to $75,000 by manufacturer. System operation would be automatic. Labor required (on a daily basis) would be that needed to start and stop the system. Labor determined at $13 per man-hour. Annual operating costs include direct and fixed charges.

[g] References 4, 6, and 7. Control system efficiency based on engineering judgment. System capital turnkey costs are for (2) cyclones with 3/16 inch thick carbon steel, 4 inch thick refractory lining, and intake velocity of approximately 50,000 acfm plus (1) wet scrubber (as addressed earlier - footnote [c]). Cyclone(s) direct installation cost was based on 130 percent of initial equipment price. Annual operating costs include direct and fixed charges. Direct operating costs were determined at 11 percent of the cyclone installed capital cost.

[h] References 4 and 8. Capital cost based on estimates for installation of required water piping and a hose station. Annual operating costs include direct and fixed charges.

[i] Estimates based on engineering judgment.

[j] References 1, 8, and 9. Storage enclosure volume would need to be at least 500,000 ft^3 based on a maximum pile size of 200 ft x 100 ft x 25 ft. Capital expenditure averaged from $3.95 to $9.38 per ft^3.

control effectiveness and costs. The more significant problems associated with auto shredding operations involve curbing the emissions generated from the trucking of autos, from the shredder itself and in handling of the nonferrous material. Vehicular movement of front-end loaders and trucks over unpaved surfaces also may cause a major fugitive dust problem. A variety of methods are available for control of fugitive dust from materials handling operations and unpaved road dust. These methods are discussed in detail in Sections 2.1.1 and 2.1.3.

For accidental fires at torching stations, fire extinguishers may be used to put out fires and, thereby, eliminate smoke generation. Proper torching practices should also be employed to prevent such fires.

The use of venturi scrubbers is common to metal salvage facilities. Pneumatic pick-up of and venting the dust (including fibrous "fluff" material) to the scrubber aids in controlling shredder fugitive losses. Also, wet shredding can serve to suppress much of the particulate problem.[5] Internal sprays can be adapted to "dry" shredder systems resulting in improved dust control.[5] Friction created in operating either system (wet or dry) can ignite combustible materials contained within the vehicles. Removal of motors and transmissions containing combustible fluids can help to eliminate explosions and decrease the high opacity problem from blue smoke. Motors and transmissions can be fed separately into the shredder, after they have been drained of their combustible fluids. Precautionary measures of

this type can result in fewer shutdowns from explosions and fire, resulting in greater productivity.

Magnetic separation and conveyor (belt) transfer points also generate fugitive dust emissions. Auto shredding facilities control these sources through the use of low-energy cyclone/wet scrubber systems. These systems also aid in the separation/removal of lighter nonferrous scrap material. The material collected (by the cyclone) is stored prior to disposal and the heavier nonferrous material fraction is conveyed to storage prior to byproduct recovery. Enclosure is an efficient alternative to the cyclone/scrubber system for controlling these emissions, but is not common in the industry due to its initial high cost.

In the handling of ferrous and nonferrous materials both to and from storage, enclosure techniques show the greatest potential as a fugitive dust control measure. In addition, conveyors can be adjusted to decrease the material free-fall distance and minimize the dust generation. Wet suppression measures can also be used to control product and nonferrous material loss.

Windblown losses from scrap material storage piles can be controlled via numerous techniques. These include enclosure, wind screens and wetting. These techniques have been addressed in Section 2.1.2.

2.15.5 Recommended Reasonably Available Control Measures (RACM)

The recommended RACM are designated in Table 2.15-1 for control of fugitive emission sources from metal salvaging operations.

It is recommended that accidental fires at torching operations be prevented by the use of good operating practices. Also, the use of fire extinguishers to promptly put out fires is recommended.

The recommended control technique for shredding operations is again implementation of the program to remove all combustible fluids coupled with the use of wet shredding and venting the shredder to a wet scrubber. These techniques have been used in the industry and are very effective in reducing fugitive particulate emissions.

The recommended control technique for magnetic separation and conveying operations is the use of a cyclone/wet scrubber system on the basis that it is an effective technique already in use in the industry.

Handling both the ferrous and nonferrous materials to and from storage can be effectively controlled using adjustable conveyors to reduce free-fall distance coupled with wet suppression prior to loading/loadout to reduce windage losses. Wet suppression is also recommended as the control technique for reducing windage losses from the storage piles.

REFERENCES FOR SECTION 2.15

1. Personal communication between Ron Creek, Cincinnati Auto Shredder, Inc. and J. Thomas Bertke, PEDCo Environmental, Inc. September 10, 1979.

2. Personal communication between Paul Fisher, City of Cincinnati Air Pollution Control Agency and J. Thomas Bertke, PEDCo Environmental, Inc. September 10, 1979.

3. Kinkley, M.L. and R.B. Neveril. Capital and Operating Costs of Selected Air Pollution Control Systems. Draft Report. Gard, Inc. Niles, Illinois. For U.S. Environmental Protection Agency. Contract No. 68-02-2072. May 1976. p. 4-4.

4. Chemical Engineering. Economic Indicators. McGraw-Hill Company. September 10, 1979. p. 1.

5. Personal communication between J. Bench, Newell, Inc. San Antonio, Texas and J. Thomas Bertke, PEDCo Environmental, Inc. September 18, 1979.

6. Horzella, T.I. Selecting, Installing and Maintaining Cyclone Dust Collectors. Chemical Engineering. McGraw-Hill Company. January 30, 1978. p. 88.

7. Particulate Emission Control Costs for Intermediate-Sized Boilers. Industrial Gas Cleaning Institute. U.S. Environmental Protection Agency. Strategies and Air Standards Division. February 1977.

8. Source Evaluation in Region IV Non-Attainment Areas to Determine TSP Emission Reduction Capabilities. PEDCo Environmental, Inc. Prepared for the U.S. Environmental Protection Agency, Industrial Environmental Research Laboratory under Contract No. 68-02-2603. Research Triangle Park, North Carolina. June 1978. p. 2-75.

9. PEDCo Environmental, Inc. Technical Guidance for Control of Industrial Process Fugitive Particulate Emissions. Report No. EPA-450/3-77-010, prepared for the U.S. Environmental Protection Agency. Office of Air and Waste Management. Office of Air Quality Planning and Standards. Contract No. 68-02-1375, Task No. 33. Research Triangle Park, North Carolina. March 1977. p. 2-40.

2.16 PULP AND PAPER MILLS

2.16.1 Process Description

The basic process for production of paper involves the destruction of lignin that binds the cellulose fibers of wood together. The cellulose fibers (or pulp) are the raw materials from which paper and cardboard products are produced.

Several different chemical processes are used to dissolve the lignin. The major processes are sulfate (Kraft) pulping, sulfite pulping and neutral sulfite semichemical (NSSC) pulping. The processes differ somewhat in the steps used in the pulp process, but all start out with wood chips as basic raw material.

Wood chips may be purchased from an outside source or may be produced on site. The logs are first debarked using mechanical means. The debarked logs are then cut at a 45 degree angle to the grain in a high-speed chipper, producing chips of a size of about 1 inch by 1 inch by 3/16 inch. The chips are then screened for proper sizing and stored for subsequent use. The prepulping steps are illustrated in Figure 2.16-1 with the potential fugitive dust sources indicated.

As the first step in the pulping process, the chips are conveyed to a digester where they are "cooked" with the lignin-dissolving chemicals. It is at this point that the pulping processes vary, since several different chemicals may be used to dissolve the lignin. From a fugitive dust standpoint, the remaining process steps, in any of the pulping processes, are all "wet" operations; and, therefore, are not fugitive sources.

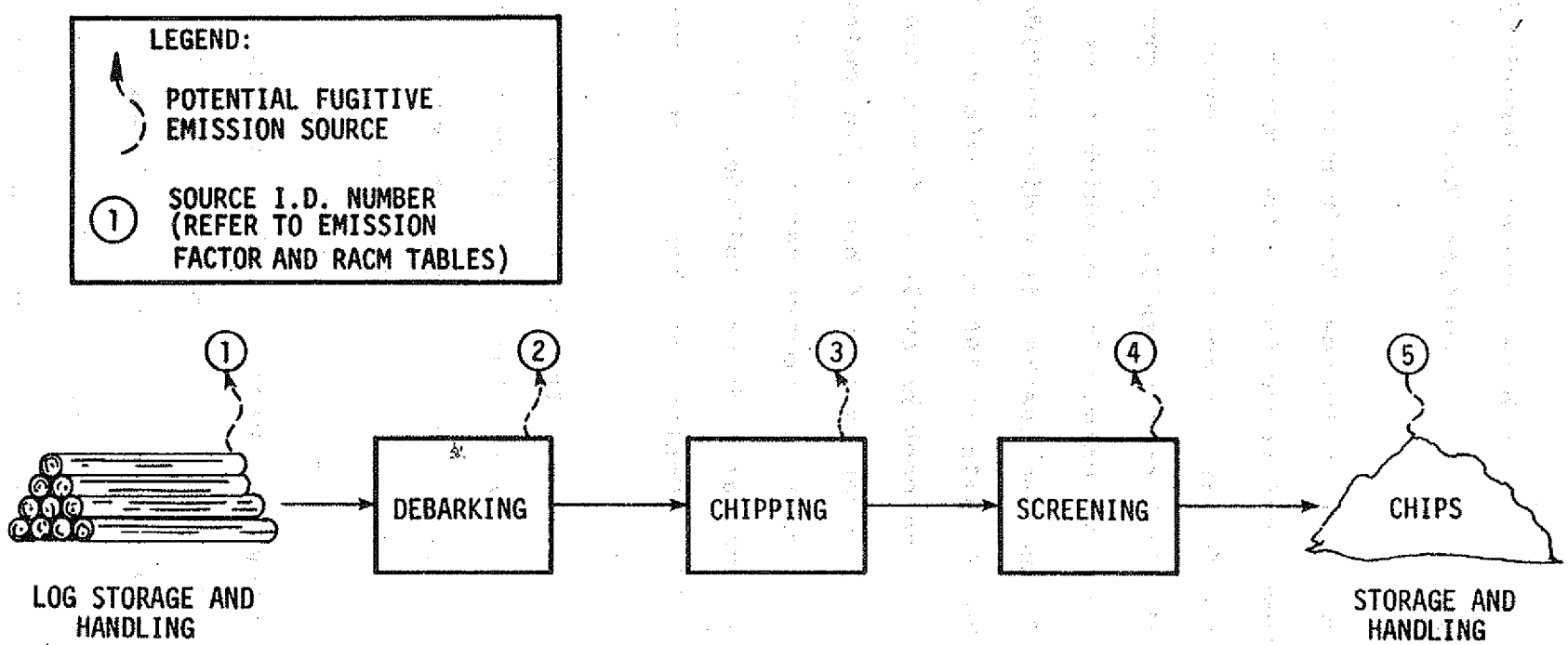

Figure 2.16-1. Simplified process flow diagram for raw material preparation for wood pulping processes at pulp and paper mills, and associated fugitive particulate emission sources.

However, for informational purposes, a brief process description of the major pulping process in the U.S., sulfate (Kraft) pulping, is provided.[1]

Figure 2.16-2 is a flow sheet of typical Kraft pulp mill operations showing the recovery and recycling of the valuable sodium salts. Wood chips are fed into a continuous digester countercurrent to a fresh chemical stream (called white liquor) containing about 21 percent active chemicals, of which three quarters is sodium hydroxide and one quarter is sodium sulfide in water solution. The digester is held at 100 to 135 psig and 338° to 347°F.[2] Time required for the cooking cycle is from 1 hour for unbleached brown pulp to as much as 5 or 6 hours for pulps that are to be bleached.[2] The cooking process causes formation of malodorous sulfide gases, such as hydrogen sulfide, methyl mercaptan and dimethyl sulfide. Venting of these gases gives a kraft mill its typical sour odor.

The contents of the digester exit through a "blow tank," where steam and noncondensibles are flashed-off, and cooked chips are sent to a filter that separates the pulp from the spent cooking liquor, now called "black liquor". The pulp passes on for further refining and possibly bleaching before it is pressed, dried and sold as pulp or made into paper or other products.

Satisfactory economics for the Kraft process require efficient recovery of sodium and sulfur values from the black liquor, as depicted on the flow sheet. The organic sulfides, also called "reduced sulfur" or "mercaptans", are often oxidized as an air

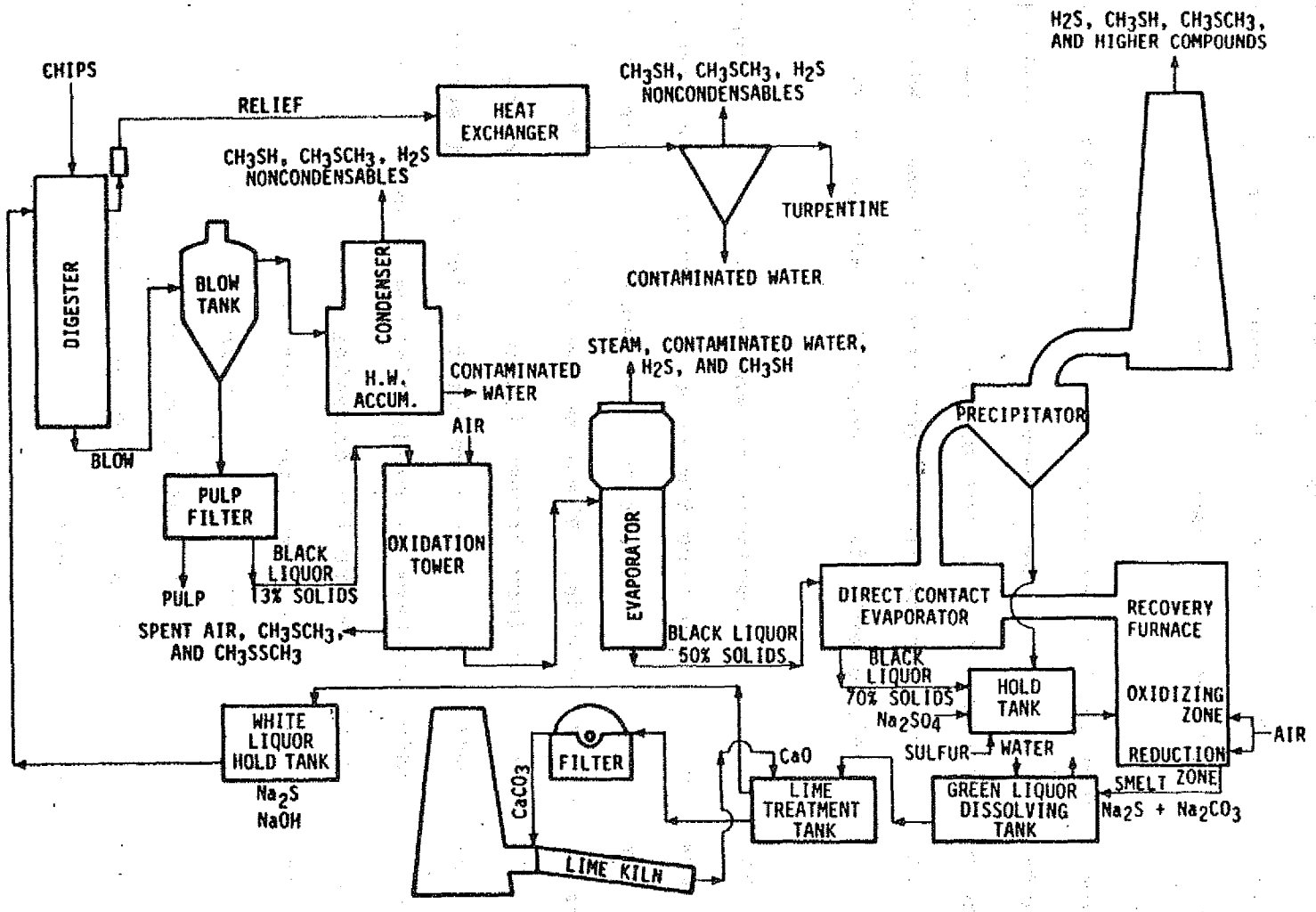

Figure 2.16-2. Typical kraft sulfate pulping and recovery process.

pollution control measure to render them less volatile and, thus, diminish loss when a direct contact evaporator is used in subsequent steps. The black liquor is then concentrated to 50 percent solids in a multiple-effect evaporator and pumped to the recovery furnace.

Where direct contact evaporation is used, the black liquor is concentrated in the recovery furnace to 70 percent combustible solids by countercurrent flow against hot combustion gases from the furnace. If good oxidation is obtained upstream, this unit will emit only small quantities of volatile reduced sulfur compounds.

The black liquor concentrate is sprayed into the recovery furnace, where the carbon from the wood is burned, the remaining water is evaporated and the sodium is changed to molten sodium carbonate or sodium sulfide. These molten salts, or "smelt", are redissolved in water to form "green liquor", and then are clarified and causticized with lime. The resultant solution of sodium hydroxide and sodium sulfate is called "white liquor". The "white liquor" is recycled to the digester.

The calcium carbonate resulting from causticizing is filtered from the "white liquor" and is passed on to an oil- or gas-fired kiln. Entering the kiln at 35 percent moisture, the calcium carbonate is dried and then decomposed at about 2370°F to calcium oxide and carbon dioxide.

2.16.2 Fugitive Dust Emission Factors

Little data exists on the quantity of fugitive emissions from debarking, chipping and handling operations at pulp mills. One source estimates that there are negligible emissions from log handling operations.[3] This would seem reasonable especially in cases where the logs are received in a wet state, a common occurrence at pulp mills. The emission factor for log debarking is estimated as 0.024 pounds per ton of logs debarked.[4] This estimate is cited as an order-of-magnitude number. If the log debarking operation is carried out on wet logs or a wet process is used (i.e., drum barkers, bag barkers or hydraulic barkers), the emissions would be insignificant. No emission factors could be located for the chipping, screening, handling or storage operations. However, due to the large size of the chips (1" x 1" x 3/16"), it is probable that these operations do not result in significant, airborne emissions.

Perhaps the most significant source of fugitive emissions at pulp and paper mills would be lime storage, handling and transfer operations. These operations are essentially the same as for lime plants and are described in Section 2.3. Another source of fugitive dust at pulp and paper mills is plant haul roads. Proper evaluation of this source is detailed in Section 2.1.

2.16.3 Particle Characterization

No data are available on the characteristics of fugitive particulate emissions from pulp and paper mills. The particles

would consist of the wood being processed as well as dirt and dust adhering to the wood and bark from previous handling. The characteristics of the lime dust generated are described in Section 2.3.3.

2.16.4 Control Methods

No specific data are available on control methods for the wood debarking, chipping, screening, handling and storage operations - if, indeed, there is any necessity for control. The control techniques generally applicable to materials handling and storage operations are described in Sections 2.1.2 and 2.1.3. However, it should be emphasized that, if the logs are in a wet state, this in itself is a good control technique.

Control techniques for lime handling operations are described in Section 2.3.4.

2.16.5 Recommended Reasonably Available Control Measures (RACM)

Given the lack of data on fugitive emissions from pulp and paper mills, no specific control measures can be recommended for the potential fugitive sources. General control techniques applicable to the various operations are described in the sections on materials handling, materials storage and plant roadways. However, it is probable that the log handling and storage, debarking, chipping, screening and chip handling and storage operations are insignificant sources of fugitive particulates, and based upon this, no control is recommended for these operations.

RACM for the lime operations are given in Section 2.3.5.

REFERENCES

1. Guidance for Lowest Achievable Emission Rates from 18 Major Stationary Sources of Particulate, Nitrogen Oxides, Sulfur Dioxide, or Volatile Organic Compounds, PEDCo Environmental, Inc. EPA-450/3-79-024, April 1979.

2. Casey, J.P. Pulp and Paper, Chemistry and Chemical Technology; Volume I: Pulp and Papermaking. Interscience Publishers, Inc., New York. 1952. pp. 133-167.

3. Technical Guidance for Control of Industrial Process Fugitive Particulate Emissions. EPA-450/3-77-010, March 1977. p. 2-333.

4. Ibid. p. 2-335.

2.17 WOODWORKING OPERATIONS

2.17.1 Process Description

This category includes any woodworking operation that emits fugitive particulate matter, such as wood shavings, sanderdust and sawdust, during the processing of wood, bark, or any wood byproducts. Such woodworking operations may include debarking, sawing, planing, chipping, shaping, moulding, hogging, latheing, drilling, carving and sanding. These operations are found in the following industries: sawmills; plywood, particleboard, and hardboard plants; and furniture and miscellaneous wood product manufacturing plants.[1]

Because of the large number of industries using woodworking operations and the large number and variety of woodworking equipment employed, a complete process description of each is beyond the scope of this study. However, a brief process description of the lumber and furniture manufacturing industry, which employs a wide range of woodworking equipment, will be discussed as a representative example.

A furniture manufacturing plant may use either logs or cut lumber as a raw material. The choice usually depends on the volume and type of final product manufactured. In either case, a sawmill is used for the primary processing of cut wood.[2]

Cut wood is transferred from the forest to the sawmill by truck, or floated down a river or towed by tugs in the form of "log booms or rafts". It is stored at the sawmill by either stacking on the ground or by using a log pond.[3] For ease of handling, the larger logs are cut to smaller lengths in a process called bucking.

The logs are then debarked by using any one of the five following types of machines: drum barkers, ring barkers, bag barkers, hydraulic barkers and cutterhead barkers. The ring and cutterhead barkers are dry processes, whereas the other three are wet processes using water.

After the logs are cut to certain lengths, they are cut lengthwise into standard sizes.

After this cutting process, the lumber is dried in the ambient air or in a kiln, and then transferred to the furniture manufacturing plant.[4]

At the furniture manufacturing plant, additional air or kiln drying of the lumber may be provided. The kiln drying is necessary in order to prevent the warping or shrinking of furniture due to the high moisture content in natural wood. Natural wood contains approximately 60 to 70 percent moisture while kiln-dried wood contains about 5 to 8 percent moisture.[5]

At furniture manufacturing plants, there are five main processing areas. These are 1) rough milling, 2) finish milling, 3) sanding, 4) assembly and 5) finishing.[6]

In the rough milling area, the lumber is cut to the approximate, required dimensions, and natural defects are removed. The woodworking operations normally used here include sawing, planing and molding.

Finish milling, which further refines the lumber, may include such woodworking operations as sawing, shaping, lathe work, mortising, and routing.

Sanding is used to create a smooth wood finish. It is usually performed by sanding machines rather than by hand.

The assembly operation usually consists of gluing and stapling wood pieces together, assemblying the pieces and performing minor hand sanding if necessary.

The finish operation usually consists of applying surface coatings to the products and drying. In the final step, the finished furniture is inspected and then packaged and shipped to the customer.[7]

Woodworking operations, such as planing, sanding and sawing, at furniture manufacturing and other miscellaneous wood processing plants, are normally performed indoors and have pneumatic transfer systems for removing wood waste from the work area. Such systems are necessary in woodworking operations in order to remove the tremendous quantity of wood waste that would otherwise accumulate. They also are a convenient transport system to collect wood waste at a central collection point for ultimate disposal. These pneumatic transfer systems usually consist of hooding devices which have scooped openings that capture wood waste from woodworking equipment as it is thrown out. The hooding devices are ducted to either cyclones and/or fabric filters. An exhaust fan is employed to provide the necessary draft to pick up most of the wood waste. Bins are used to store the wood waste which is captured by the cyclone and/or fabric filter.

Large diameter cyclones are used more extensively than fabric filters. This is primarily because such devices are relatively inexpensive, require little maintenance and have moderate power requirements. Fabric filters are generally used in woodworking operation exhaust systems where a significant amount of fine dust such as wood flour or sanderdust is encountered, or where dust nuisances cannot be tolerated. Fabric filters are very efficient in capturing wood waste and are often used in conjunction with less efficient collectors such as cyclones or impingement traps which remove most of the larger wood particles.[8,9]

The design of a cyclone collector is based on the air volume and type of wood waste being handled. At woodworking operations where sanderdust waste predominates, high efficiency cyclones with diameters of less than 3 feet are used. For woodworking operations where larger wood waste predominates, cyclones with diameters up to 8 feet

are effective. However, many operations employ a wood/bark hogging machine to reduce the particle size for ease of transport and/or for use in wood-fired boilers (see Figure 2.17-1). For woodworking operations generating varying sizes of wood wastes, cyclones with intermediate diameters are used.[10,11]

The wood waste which escapes the pneumatic transfer system is generally insignificant, as is that which escapes through building doors, windows and ventilation systems. Therefore, individual woodworking operations which are used at a furniture manufacturing plant and other wood processing plants have negligible fugitive emissions and are not considered in this study.[13] Furthermore, for any woodworking operation, which is performed indoors and which employs a pneumatic transfer system and cyclone for wood waste removal, the source of emissions is usually considered to be the cyclone rather than the individual woodworking operations. The cyclone is, therefore, considered as the "source operation" and is a point source.[14]

A process flow diagram for lumber and furniture manufacturing as well as plywood and particleboard manufacturing is illustrated in Figure 2.17-2. The figure identifies each potential source of fugitive dust. Those sources are as follows: for sawmills - log debarking, sawing and sawdust pile loading, unloading and storage; and for furniture, plywood or particleboard manufacturing, or any similar woodworking operation - log debarking (at veneer/plywood manufacturing plants), wood waste storage bin vents and wood waste storage bin loadouts. Another potential source of fugitive dust, which is not discussed here, is plant roads. This source is covered in Section 2.1.1.

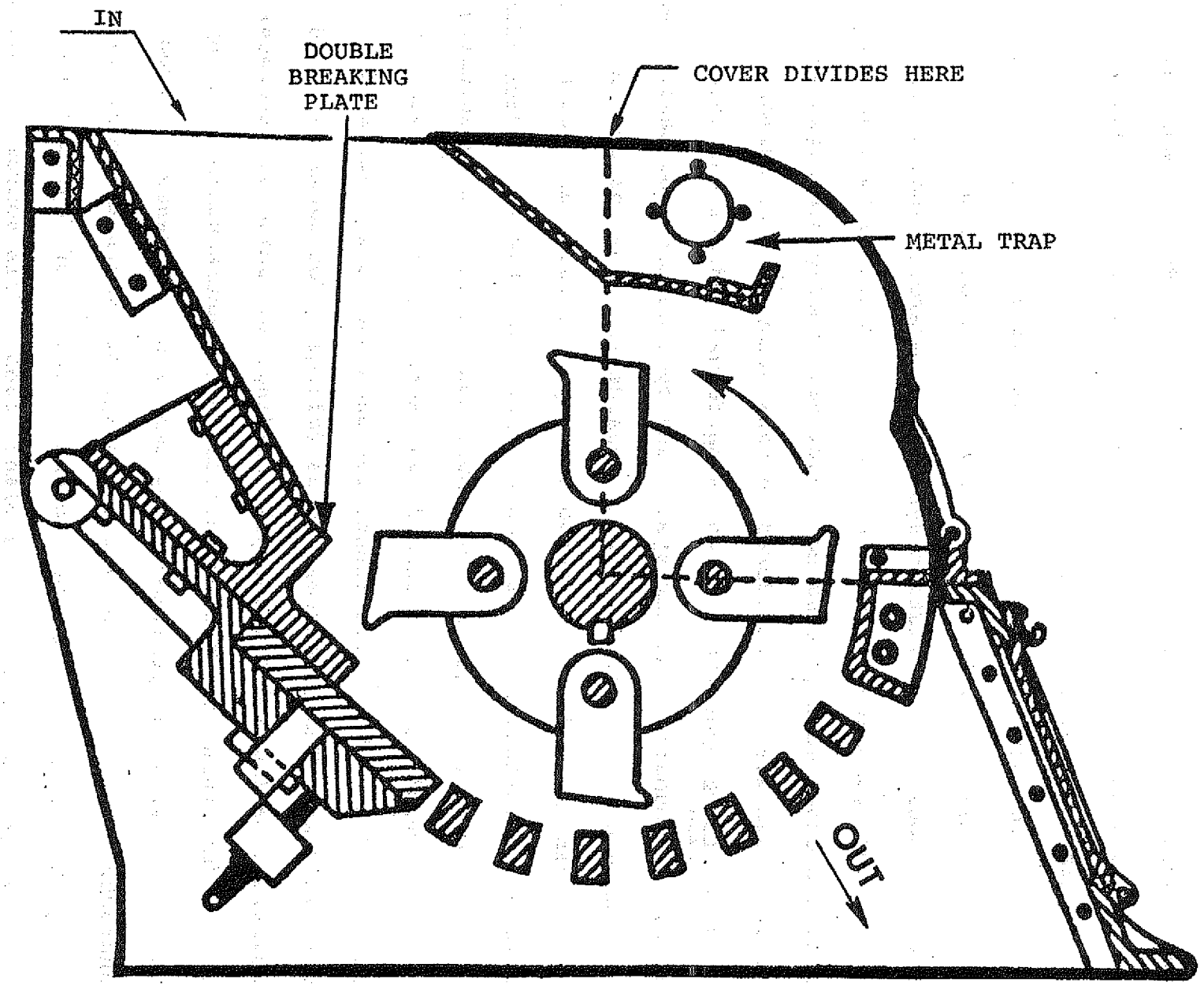

Figure 2.17-1. Cross-section of a typical wood hogging machine.[12]

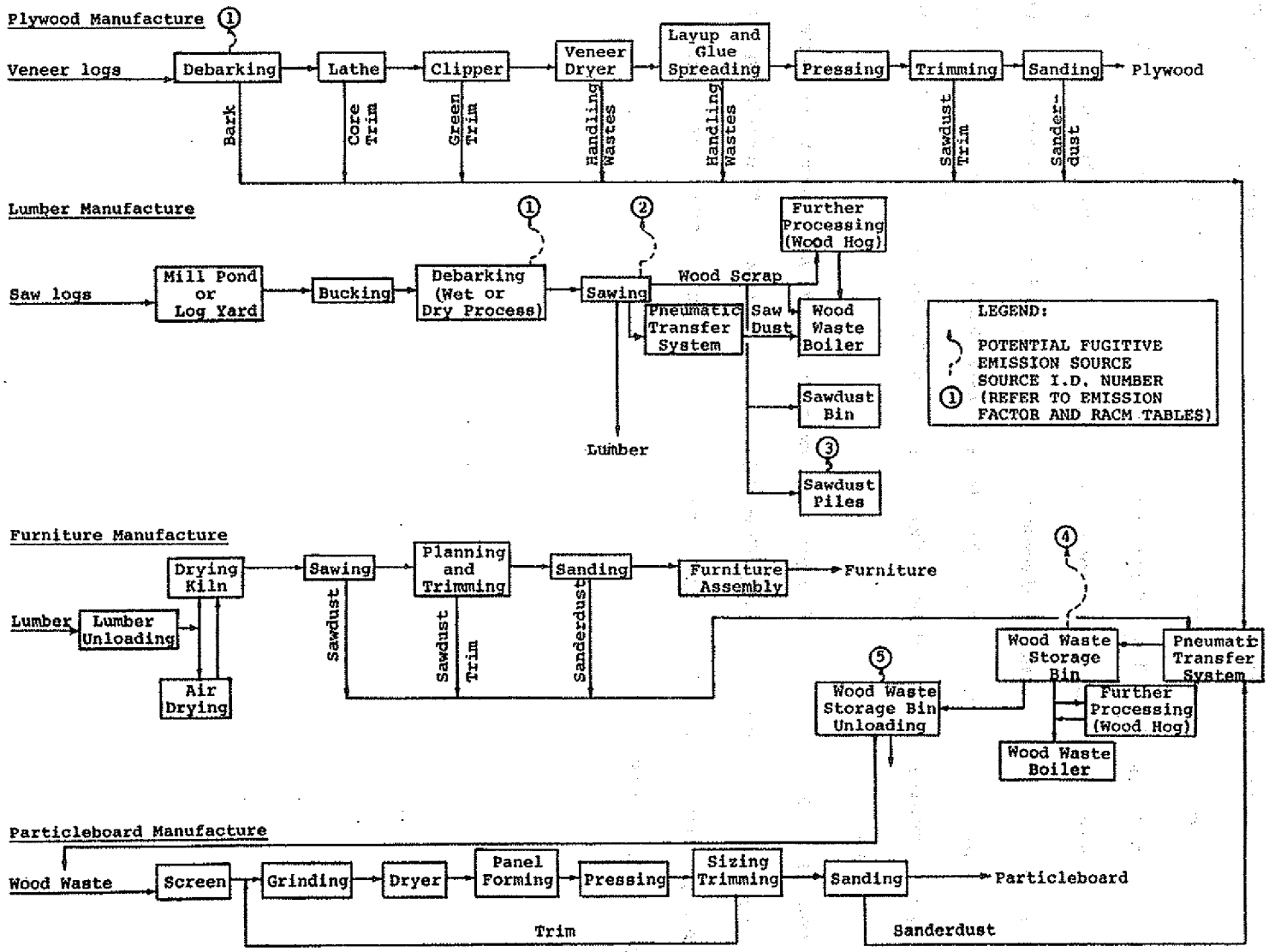

Figure 2.17-2. Simplified process flow diagram for woodworking operations at several wood product manufacturing plants and associated fugitive particulate emission sources.[15,16]

2.17.2 Fugitive Dust Emission Factors

The estimated emission factors for various woodworking fugitive particulate emission sources are summarized in Table 2.17.1. The emission factors for log debarking, sawing, and sawdust pile loading, unloading and storage are rough estimates that are based on material balance and engineering judgment. The emission factors for wood waste storage bin vents and loadouts are based on only engineering judgment, Therefore, these factors should be considered to have a poor reliability.

The log handling and bucking operations at sawmills are considered to be negligible sources of fugitive emissions. Therefore, these operations are not identified as fugitive dust sources, and no emission factors are presented.

TABLE 2.17-1 FUGITIVE DUST EMISSION FACTORS FOR WOODWORKING OPERATIONS

Source	Emission factor	Reliability rating	Reference
(1) Log debarking (sawmills)	0.024 lb/ton logs debarked	E	17
(2) Sawing (sawmills)	0.35 lb/ton logs sawed	E	17
(3) Sawdust pile loading, unloading and storage (sawmills)	1.0 lb/ton wood waste stored	E	17
(4) Wood waste storage bin vent	1.0 lb/ton wood waste stored	E	17
(5) Wood waste storage bin loadout	2.0 lb/ton wood waste loaded out	E	17

2.17.3 Particle Characterization

The fugitive particulate emissions from sawmills consist primarily of broken bark particles and sawdust from sawing operations. In addition, fugitive particulate emissions occur from dirt and dust which are embedded in the bark of logs and become airborne during unloading, dragging, debarking and storage operations.[18]

There is very limited data available on the particle size of fugitive emissions from sawmill operations. One study reported that approximately 91 percent of the particulate matter generated from sawmill operations at lumber yards is larger than 991 microns in diameter and that few of these sawdust particulates would be less than 30 microns in diameter. Thus, it is highly probable that few of these particulates would remain suspended in the ambient air for a significant amount of time.[19]

There is also very little published data available on the particle size of fugitive emissions from furniture manufacturing or other plants. One study was found regarding a western red cedar furniture manufacturing plant which was equipped with a pneumatic exhaust system on the majority of woodworking operations. It was found that most of the suspended particles in the plant environment had a particle size diameter of less than 2 microns.[20]

The particle size of the wood waste generated by woodworking operations varies and can be less than 1 micron in diameter or up to several inches long. The particle size of wood waste from such woodworking operations is dependent on a number of factors such as the type of operation, the type of wood processed and the sharpness of the cutting tools used.[21]

The type of operation significantly affects the particle size of wood waste generated. For example, a hammermill-type wood hog will emit particles of all sizes, while a sander will generate only fine particles. Wood waste particles from other types of machines are generally larger in size, have greater uniformity than the above equipment and have a particle size that is seldom less than 10 microns in diameter.[22]

The type of wood processed also affects the particle size of the wood waste generated. For instance, hardwoods usually will tend to splinter and break into smaller particles than softwoods, which tend to tear and shred.[23]

The sharpness of the cutting tools used affects the wood waste particle size, since dull cutting tools tend to increase the tearing and shredding of the wood thereby resulting in larger particle sizes.[24]

For a comparison of the relative particle sizes of wood waste, Table 2.17-2 gives approximate size ranges for the typical components of wood residue used as fuel in boilers.

TABLE 2.17-2. APPROXIMATE SIZE RANGE OF TYPICAL COMPONENTS OF WOOD FUEL

Component	Size range, inches
Bark	1/32 - 4
Coarse wood residues	1/32 - 4
Planer shavings	1/32 - 4
Sawdust	1/32 - 3/8
Sanderdust	2 μ[a] - 1/32
Reject "mat finish"	10 μ[a] - 1/4

[a] Small end of the range is measured in microns.

Fugitive particulate emissions from woodworking operations are generally considered to be non-hazardous with respect to health, property and welfare; however, such emissions can create nuisance problems under certain conditions. In any case, the proper collection and disposal of wood waste from woodworking operations employing lumber that has been treated with a toxic preservative such as pentachlorophenol should always be practiced. Pentachlorophenol is a hazardous chemical and is a known carcinogen.[26]

2.17.4 Control Methods

This section will describe all known control methods for the fugitive dust sources identified in this study. The control methods described will include those which are typical in the industry, those which are in use but not typical in the industry and those which are technically feasible but not in use by the industry.

Log debarking operations at sawmills using wet process debarking, such as drum barkers, bag barkers and hydraulic barkers, usually do not require any additional control methods for fugitive emissions. If further fugitive emission control is required, the logs could be kept in wet storage prior to debarking. For sawmills which already employ log ponds, the logs may simply be kept in such ponds until they are required at the debarking operation. For those sawmills which require addtional control and do not employ log ponds, a wet storage pond could be installed. Log debarking operations which use dry processes, such as ring and cutterhead barkers, can be controlled by wet storage of the logs prior to debarking. For dry and wet process debarking operations which require additional control, or if wet storage is not possible, the debarking operation may be totally enclosed or fixed hoods may be installed with aspiration to either a

cyclone or fabric filter. However, the use of a cyclone or fabric filter to control log debarking operations is not in use by the industry, although it is a technically feasible control technique. In summary, for both wet and dry process debarking, there is no typical control technique currently used by the industry for control of fugitive emissions. In fact, the majority of such operations employ no control technique whatsoever.[27]

For fugitive emissions from sawing operations at sawmills, the typical control technique used by the industry is hooding with aspiration to a cyclone. Also, the use of a fabric filter in place of a cyclone is a technically feasible control alternative, although it is not generally used in the industry. Lastly, the use of thinner saw blades will help reduce the amount of fugitive emissions generated and will result in an economic benefit through the more efficient use of lumber.[28]

Fugitive emissions from sawdust pile loading, unloading and storage may be controlled by the use of wet suppression techniques, although this is not a typical control technique used by the industry. Generally, the most typical control technique used by the industry is to remove the sawdust as soon as possible, and thus, minimize the size of the sawdust storage pile. For facilities which have wood-fired boilers or a manufacturing process which uses wood waste (i.e., particleboard facility), sawdust pile loading, unloading and storage may be partially or totally eliminated by directly blowing the sawdust from the pneumatic transfer system to such boiler or process. For those sawmill operations which do not have such boilers or processes or are not able to directly blow sawdust into a boiler or process, the early removal of sawdust from the site should be practiced.[29]

In recent years, sawmills, as well as other generators of wood waste, have found it easier to dispose of the wood waste generated by the manufacturing operations. Traditionally, wood waste from operations employing kiln-dried wood has had high sales value, while "green" wood waste has been essentially worthless. At the present time, "green" wood waste is increasingly being used for fuel in wood-fired boilers as well as for certain manufacturing operations (e.g., the production of pressed-wood pallets).

Early removal of sawdust can be made possible by notifying potential users of its availability. As an example of the potential market for such waste, one source cites the following productive uses:

1. plastic bulking agent for products such as plastic wood, masonite, etc.;
2. pressed woods such as firewood, fiberboard, Firtex, and others;
3. soil additives;
4. smokehouse fuel (hardwood sawdust is burned to produce smoke in the processing of bacon, ham, pastrami, etc.);
5. floor sweep (sawdust with and without oil is spread on floors before they are swept to help hold dust particles);
6. woodfiller (sawdust can be mixed with water resins and other liquids and used as wood filler);
7. floor cover in butcher shops, restaurants, etc.; and
8. waste heat boilers (heat can be recovered from incinerator flue gases to generate steam, hot water, etc.).[30]

Finally, the control techniques and precautions presented in Section 2.1.2 may be adaptable to sawdust storage.

As was stated earlier in this report, the sawing, planing, sanding and other miscellaneous woodworking operations are usually performed indoors without any fugitive emissions escaping and are controlled by pneumatic transfer systems.

Fugitive emissions from wood waste storage bin vents are often partially controlled by screens. Greater emission reduction may be achieved if this screen is replaced with a simple unaspirated fabric filter (cloth tube filter). Figure 2.17-3 illustrates such a system as installed and used on a cement silo.[31]

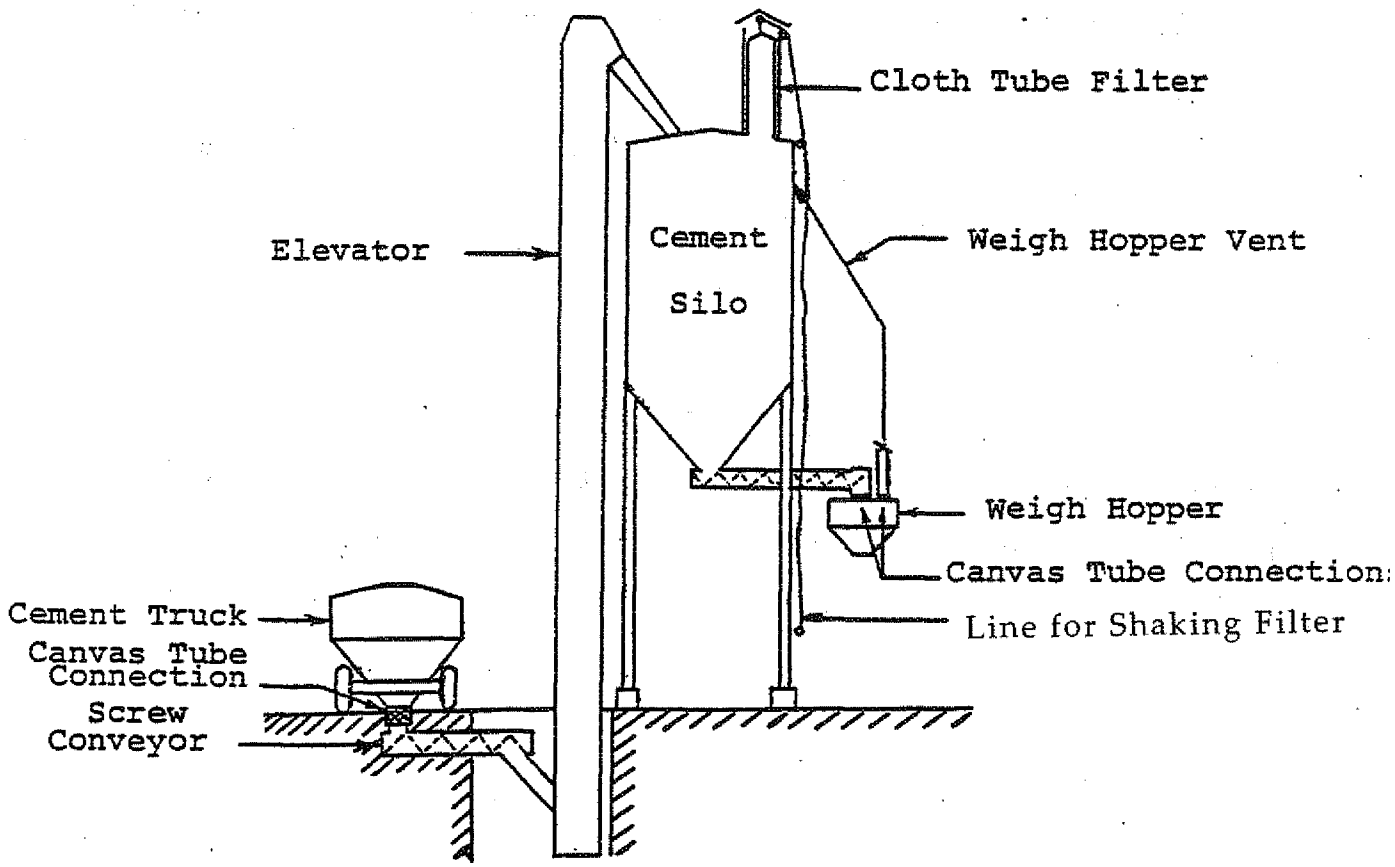

Figure 2.17-3. Cement-receiving and storage system.[31]

For fugitive emissions from wood waste storage bin loadouts, emission reduction may be achieved by the use of telescopic tubes during loadout from the storage bins to trucks. Telescopic tubes reduce the freefall distance and thereby reduce fugitive emissions.

Telescopic tubes used in conjunction with a canvas-covered truck and side curtains will provide additional control. Greater fugitive emission control may be obtained by enclosing the loadout area as much as possible or by using such an enclosure with ventilation to a cyclone or fabric filter. Generally, some type of chute is used by the industry for such operations. However, it is usually not as adjustable as a telescoping chute, and does allow a greater quantity of fugitive emissions.[32]

The control techniques, efficiencies and estimated costs, and RACM selections are summarized in Table 2.17-3.

2.17-5 Recommended Reasonably Available Control Measures (RACM)

The RACM selections for woodworking operation fugitive emission sources are presented in Table 2.17-3.

No control measure is recommended for log debarking. The cost benefit of all of the control alternatives is unreasonable due primarily to the relatively small amount of fugitive emissions generated from such operations.

For those sawing operations at sawmills which emit fugitive particulates into the ambient air, the selected control technique is hooding with ventilation to a cyclone. Although the cost benefit ($2.40/lb) of this control option is high, economies of scale often can be attained by ducting other woodworking operations to this system without decreasing efficiency to any significant degree. Furthermore, many sawmills currently employ such a system.

The selected control technique for sawdust pile loading, unloading and storage at sawmills is the use of telescopic tubes to reduce the free fall distance of the wood waste. Several precautionary control measures, as identified in Section 2.1.2, are also recommended for this source. For example, the use of wind breaks also helps to reduce the potential for fugitive emissions.

TABLE 2.17-3. A SUMMARY OF THE CONTROL ALTERNATIVES, EFFICIENCIES AND COSTS, AND THE RACM SELECTIONS FOR FUGITIVE DUST EMISSIONS FROM SOURCES IN WOODWORKING OPERATIONS

Fugitive dust sources	Control alternatives	Control efficiency, %	Control costs, Jan.1980 $		Cost benefit, $/lb	RACM selection
			Capital	Annualized		
(1) Log debarking (sawmills)	Wet storage of logs prior to debarking	95[a]	173,000[b]	21,500[c]	51.0	No control
	Enclosure	100	15,000[d]	2,600[d]	5.83	
	Hooding, vent to cyclone	80[a]	166,000[e]	26,000[f]	92.0	
	Hooding, vent to fabric filter	99[g]	306,000[h]	126,600[i]	287.0	
(2) Sawing (sawmills)	Hooding, vent to cyclone	80[a]	59,500[e]	10,900[j]	2.37	Hooding, vent to cyclone
	Hooding, vent to fabric filter	99[g]	122,000[h]	42,000[i]	7.43	
(3) Sawdust pile loading, unloading and storage (sawmills)	Wet suppression	50[a]	24,500[k]	7,300[l]	5.86	Telescopic tubes
	Enclosure (silo)	100	260,600[m]	34,900[n]	14.00	
	Telescopic tubes	75[o]	8,560[o]	1,150[p]	0.61	
(4) Wood waste storage bin vent	Screens	Unknown	-	-	NA	Fabric filter (non-aspirated)
	Fabric filter (non-aspirated)	99[g]	5,000[g]	670[n]	0.45	

(continued)

TABLE 2.17-3 (continued)

Fugitive dust sources	Control alternatives	Control efficiency, %	Control costs, Jan.1980 $		Cost benefit, $/lb	RACM selection
			Capital	Annualized		
(5) Wood waste storage bin loadout	Telescopic tubes	75[o]	8,560[o]	1,150[p]	0.61	Telescopic tubes
	Enclosure (3-sided)	60[r]	27,700[r]	6,100[r]	3.39	
	Enclosure, vent to cyclone	80[e]	87,200[s]	17,000[s]	7.08	
	Enclosure, vent to fabric filter	99[g]	149,700[t]	48,100[t]	16.20	

(continued)

TABLE 2.17-3 (continued)

[a] Estimate based on engineering judgment.

[b] Reference 33. Capital cost for wet storage (log pond) is based on the cost for a 100,000 sq.ft. primary clarification system.

[c] Annual operating and maintenance costs were assumed to be negligible. Annualized capital charges were estimated on the basis of a 30-yr. life and a 12 percent annual cost of capital.

[d] Reference 34. Based on 20' x 20' x 30' enclosure.

[e] Reference 35.

[f] Reference 35. Annual maintenance costs were estimated at $0.065/acfm, operating costs at $1.70/hr at 2000 hrs/yr. and capital charges were determined assuming a 20-yr. life and 12 percent cost of capital.

[g] Reference 36.

[h] Reference 37.

[i] Reference 38. Annual capital charges were based on a 20-yr. life and 12% cost of capital.

[j] Reference 35. Annual maintenance costs were estimated at $0.065/acfm, operating costs at $0.42/hr at 2,000 hrs/yr. and capital charges were determined assuming a 20-yr. life and 12 percent cost of capital.

[k] Reference 39. Estimated from Figure 4-5 at 12.5 tons/hr.

[l] Reference 40. Estimated from Figure 4-5 at 12.5 tons/hr. and 2,000 hours/yr of operation.

[m] Reference 41. Capital cost based on an average of $6.27/ft^3 of enclosed storage.

[n] Includes capital charges only at 20-yr. life and 12 percent cost of capital.

[o] Reference 42.

[p] Includes capital charges only at 20-yr. life and 12 percent cost of capital.

[q] Reference 43. Estimate based on 50 to 60 ft^2 fabric filter.

[r] Obtained from Section 2.6, Table 2.6-3, for truck unloading.

[s] Based on capital and annual costs for 3-sided enclosure and comparable cyclone system as used for sawing at sawmills.

[t] Based on capital and annual costs for 3-sided enclosure and comparable fabric filter system as used for sawing at sawmills.

For the control of fugitive emissions from wood waste storage bin vents, a non-aspirated, fabric filter is recommended. This system is cost effective and is capable of achieving no visible emissions.

The selected control technique for wood waste storage bin loadouts is the use of telescopic tubes. This control alternative was selected due to its low cost effectiveness.

REFERENCES FOR SECTION 2.17

1. Compilation of Air Pollutant Emission Factors. U.S. Environmental Protection Agency, Office of Air and Waste Management, Office of Air Quality Planning and Standards. Publication No. AP-42. Research Triangle Park, North Carolina. April 1976. p. 10.4-1.

2. Technical Guidance for Control of Industrial Process Fugitive Particulate Emissions. EPA-450/3-77-010, March 1977. p. 2-332.

3. Jones, H.R. Fine Dust and Particulates Removal. Noyes Data Corporation. Park Ridge, New Jersey. 1972. p. 112.

4. Op. cit. Reference 2. p. 2-332.

5. Ibid.

6. Ibid.

7. Ibid. pp. 2-332 to 2-333.

8. Op. cit. Reference 1. p. 10.4-1.

9. Air Pollution Engineering Manual, Second Edition. Danielson, J.A. (ed.). U.S. Environmental Protection Agency. Research Triangle Park, North Carolina. May 1973. pp. 372-374.

10. Op. cit. Reference 1. p. 10.4-1.

11. Op. cit. Reference 9. pp. 373-374.

12. Control of Particulate Emissions from Wood-Fired Boilers. EPA-340/ 1-77-026. p. 2-4.

13. Op. cit. Reference 2. pp. 2-333, 2-336.

14. Op. cit. Reference 1. p. 10.4-1.

15. Op. cit. Reference 2. p. 2-334.

16. Op. cit. Reference 3. p. 112.

17. Op. cit. Reference 2. p. 2-335.

18. Op. cit. Reference 2. p. 2-336.

19. Ibid. pp. 2-336 to 2-337.

20. Ibid. p. 2-337.

21. Op. cit. Reference 9. p. 373.

22. Ibid.

23. Ibid.

24. Ibid.

25. Op. cit. Reference 12. p. 2-3.

26. Federal Register, Volume 43, No. 21 - Tuesday, January 31, 1978. p. 4109.

27. Op. cit. Reference 2. pp. 2-337, 2-338.

28. Ibid.

29. Ibid. p. 2-339.

30. Op. cit. Reference 9. pp. 374-375.

31. Ibid. p. 336.

32. Op. cit. Reference 2. p. 2-339.

33. Process Design Techniques for Industrial Waste Treatment. Associated Water & Air Resources Engineers, Inc. AWARE, Inc. Adams, C.E. and Eckenfelder, W.W. (eds.). Enviro Press, Inc. Nashville. 1974. p. 256.

34. PEDCo Environmental, Inc. Control Techniques for the Crushed and Broken Stone Industry, EPA Contract Nos. 68-01-4147 and 68-02-2603, Cincinnati, Ohio. July, 1974. p. 3-38.

35. GARD, Inc. Capital and Operating Costs of Selected Air Pollution Control Systems. EPA-450/3-76-014. May, 1976. pp. 3-1 to 4-89.

36. Op. cit. Reference 9. p. 373.

37. Nonmetallic Minerals Industries Control Equipment Costs. Industrial Gas Cleaning Institute for U.S. EPA under Contract No. 68-02-143. Task No. 19. February 1977. p. 3-3.

38. Ibid. p. 3-5.

39. Op. cit. Reference 37. p. 4-9.

40. Ibid. p. 4-12.

41. Op. cit. Reference 2. p. 2-40.

42. Fugitive Emissions from Integrated Iron and Steel Plants. EPA-600/2-78-050. March, 1978. p. 6-6.

43. Personal communication between Paul Norris, Kramer-Norris Equipment Company and James A. Cummings, Ohio EPA. January 22, 1980.

APPENDIX FOR SECTION 2.17

A typical sawmill and furniture manufacturing plant has the following production data:

Sawmill

Logs debarked: 3,400,000 bd-ft/yr or 18,587 tons/yr

Logs sawed: 16,320 tons/yr

Sawdust handled: 2,493 tons/yr

Furniture Plant (Supplied by the above sawmill)
Lumber usage: 3,000,000 bd-ft/yr or 4,500 tons/yr
Wood waste stored: 1,500 tons/yr
Wood waste storage bin loadout: 1,500 tons/yr

1 Log debarking (sawmills)

a. Wet storage of logs prior to debarking:

$$\text{Capital cost} = \$100{,}000 \left(\frac{249.6}{144.1}\right) = \$173{,}213 \text{ or } \approx \$173{,}000$$

Annual capital charges:

$$PV = R \cdot PVF$$
$$i = 12\%,\ n = 30 \text{ yrs.}$$

$$173{,}000 = R\ (8.055)$$
$$R = \$21{,}477 \text{ or } \approx \$21{,}500$$

$$C/B = \frac{\$21{,}477/\text{yr}}{(0.024\ \frac{\text{lb}}{\text{ton}})(18{,}587\ \frac{\text{tons}}{\text{yr.}})(.95)} = \$50.68 \text{ or } \approx \$51.00$$

b. Enclosure:

$$C/B = \frac{\$2.600/\text{yr}}{(0.024\ \frac{\text{lb}}{\text{ton}})(18{,}587\ \frac{\text{tons}}{\text{yr}})(1.0)} = \$5.83$$

c. Hooding, vent to cyclone: 20' x 10' rectangular canopy

$$\text{acfm required} = 1.4\ \text{PDV (Tech. Guidance..p. 3-16)}$$
$$= 1.4\ (60')(5')(200'/\text{min})$$
$$= 84{,}000 \text{ acfm}$$

Cost of control device (cyclone) and auxilaries:

Canopy

Plate area req'd (Fig. 4-17, Gard) = 500 sq.ft.
Assume 10 gage carbon steel, 1/4 in. plate
20% for structural supports
(500 sq.ft.)(5.625 lb/sq.ft.)(1.2) = 3,375 lbs.

Material cost = LG + $0.194/lb
= (20')($8/ft) + (0.194/lb)(3,375 lbs.)
= 160 + 654.75
= $814.75

Ducts (Assume 100' req'd)

The duct diameter necessary to keep a 4000 fpm exhaust velocity is:
(Air Pollution Engr. Manual, p. 373)

$$A = (84{,}000 \text{ cfm})(4{,}000 \text{ ft/min}) = 21 \text{ sq.ft.}$$

$$d = \sqrt{4A/\pi} = \sqrt{(4)(21)/\pi} = 5.2 \text{ ft.}$$

Duct cost (Fig. 4-21) = $92/ft.
($92/ft)(100 ft) = $9,200

Elbow duct
(Fig. 4-24) $1,830

Expansion joint
(Fig. 4-26) $3,200

Mechanical collectors (2)
(4" ΔP, @ 40,000 cfm, Fig. 4-53)
2 x ($5,400) = 10,800

Supports
(Fig. 4-37)
2 x ($2,900) = $5,800

Dust hoppers
(Fig. 4-38)
2 x ($900) = $1,800

Scrolls
(Fig. 4-39)
2 x $1,600 = $3,200

Fans
(60", Class 2, backwardly curved,
4" ΔP, Fig. 4-40)
2 x ($5,800) = $11,600

Motors
(Fig. 4-41) 600 rpm
2 x ($4,000) = $8,000

Starters
(Fig. 4-41)
2 x ($600) = $1,200

Total cost = $57,445

Capital cost:

(1) Equipment costs (control device & auxilaries) = $57,445

(2) Tax and freight @ 7% of (1) = $4,021

(3) Installation cost & hooding labor = $43,984
(Table 4-12, Fig. 4-19)

(4)	Subtotal	=	$105,450
(5)	Engineering @ 10% of (4)	=	10,545
(6)	Subtotal (4) + (5)	=	115,995
(7)	Contingencies @ 10% of (6)	=	11,599
(8)	Total capital costs (6) + (7)	=	127,594
	$127,594 (294.6/192.1) ≈$166,000	=	165,786

Annual cost
Maintenance: ($0.065/cfm)(84,000 cfm)
x (249.6/204.1) = $6,677
Operating cost: (Fig. 4-60)
($1.70/hr)(2,000 hrs/yr) x
(249.6/204.1) = $4,418
Capital charges:
PV = R·PVF
i = 12%, n = 20 yrs.
166,000 = R·(7.469)
R = $22,225

Total annual cost = $6,677 + 4,418
+ 22,225 = $33,320 or
≈ $33,000

$$C/B = \frac{\$33{,}000/yr}{(0.024\ \frac{lb}{ton})(18{,}587\ \frac{tons}{yr})(.8)}$$
= $92.47 or ≈$92.00

d. Hooding, vent to fabric filter:

Capital cost = $250,000 (Nonmetallic Minerals, p. 3-3)
$250,000 (249.6/204.1) = $305,732 or
≈ $306,000

Annual cost

Operating cost: $70,000 (249.6/204.1)
= $85,605 or ≈$85,600

Capital charges:
PV = R·PVF
n = 20, i = 12%
$306,000 = R(7.469)
R = $40,969 or ≈$41,000

Total annual cost = $126,600

$$C/B = \frac{\$126{,}600/yr}{(0.024\ \frac{lb}{ton})(18{,}587\ \frac{tons}{yr})(.99)} = \$286.67$$

or ≈$287.

(2) Sawing (sawmills)

a. Hooding, vent to cyclone

Assume slot hood (Fig. 3-1, Tech. Guidance)
L = 6', W = 2'
Q = 3.7 LVX
= 3.7 (200'/min)(6')(5')
= 22,000 cfm

Slot hood
Plate req'd (Fig. 4-17, Gard) = 30 sq.ft.
(30 sq.ft.)(5.625 lb/sq.ft.)(1.2) = 202.5 lbs.
Material cost = LG + $0.194/lb
= 6' ($6/ft) + (0.194)(202.5)
= 36 + 39.3
= $75.30

Duct
Duct diameter necessary to keep a 4,000 fpm exhaust velocity (Air Pollution Engr. Manual, p. 373)

A = (22,000 cfm)(4,000 ft/min)
= 5.55 sq.ft.
$d = \sqrt{4 \cdot A/\pi}$
$= \sqrt{4 \cdot 5.55/\pi}$
= 2.66 ft.

(Fig. 4-21) $50/ft (100') = $5,000

Elbow duct
(Fig. 4-24) $670

Expansion joint
(Fig. 4-26) $2,100

Mechanical collector

Collector inlet area = 8.3 sq.ft.
Collector price (Fig. 4-35) = $4,000

Supports

(Fig. 4-37) $2,570

Dust hoppers

(Fig. 4-38) $694

Scroll

(Fig. 4-39) $1,645

Fans

(40", Class 2, 4" ΔP, Fig. 4-40)
$2,900

Motor

(Fig. 4-41) 800 rpm $850

Starter

(Fig. 4-41) $200

Total cost = $20,704

Capital cost:

(1)	Equipment costs (control device & auxilaires	= $20,704
(2)	Tax and Freight @ 7% of (1)	= 1,449
(3)	Installation cost & hooding labor (Table 4-12, Fig.4-19)	= 15,678
(4)	Subtotal	= $37,831
(5)	Engineering @ 10% of (4)	= 3,783
(6)	Subtotal (4) + (5)	= $41,614
(7)	Contingencies @ 10% of (6)	= 4,161
(8)	Total capital costs	= $45,775
	45,775 (249.6/192.1)	= $59,477

Annual cost

Maintenance: ($0.065/cfm)(22,200 cfm) x (249.6/204.1) = $1,765

Operating cost: ($0.42/hr)(2,000 hr/yr) x (249.6/192.1) = $1,091

Capital charges:

PV = R·PVF

n = 20 yrs, i = 12%

$59,477 = R· (7.469)

R = $7,963

Total annual charges = $1,765 + 1,091 + 7,963 = $10,819

$$C/B = \frac{\$10,819/yr}{(0.35\ \frac{lb}{ton})(16,320\ \frac{tons}{yr})(0.8)}$$

≈ $2.37

b. Hooding, vent to fabric filter

Capital cost = $100,000 (249.6/204.1)
= $122,292

Annual cost:

Operating cost: $21,000 (249.6/204.1) = $25,682

Capital charges:

PV = R·PVF

n = 20 yrs, i = 12%

$122,292 = R (7.469)

R = $16,373

Total annual cost ≈ $42,000

$$C/B = \frac{\$42,000}{(0.35\ \frac{lb}{ton})(16,320\ \frac{tons}{yr})(0.99)} = \$7.43$$

③ Sawdust pile loading, unloading and storage (sawmills)

a. Wet suppression

$$\frac{(2,493\ \frac{tons}{yr})(\ \ yr\ \ )}{(\ \ \ \ \ )(2,000\ hrs)} = 1.25\ tons/hr$$

1.25 [(100 lb/cu.ft. stone)/(10 lb/cu.ft. sawdust)]
= 12.5 tons/hr

Capital cost (p. 4-9 NMI)

($20,000)(249.6/204.1) = $24,459
≈ $24,500

Annual cost (p. 4-12 NMI)

($6,000)(249.6/204.1) = $7,338
or ≈ $7,300

$$C/B = \frac{\$7{,}300/yr}{(1\ \frac{lb}{ton})(2{,}493\ \frac{tons}{yr})(0.5)} = \$5.86$$

b. Enclosure

[Based on average cost of $5.13/cu.ft. x (249.6/204.1) = $6.27/cu.ft.]

$$\text{Storage needed} = (2{,}493\ \frac{tons}{yr})(\frac{yr}{12\ mo.})$$
$$= 207.8\ tons/mo.$$

Assume 1 month storage capacity needed

Capital cost

Storage capacity needed =
(207.8 tons)(2,000 lbs/ton)(cu.ft./10 lbs)
= 41,560 cu.ft.
(41,560 cu.ft.)($6.27/cu.ft.) = $260,581

Annual cost

PV = R·PVF
n = 20 yrs, i = 12%
$260,581 = R· (7.469)
R = $34,888

$$C/B = \frac{\$34{,}888/yr}{(1\ \frac{lb}{ton})(2{,}493\ \frac{tons}{yr})(1)} = \$13.99$$

c. Telescopic tubes (Fug. Emissions from Integrated Iron & Steel, p. 6-6)

Capital cost

$7,000 (249.6/204.1) = $8,561

Annual cost

Capital charges only
PV = R·PVF
n = 20 yrs, i = 12%
8,561 = R (7.469)
R = $1,146

$$C/B = \frac{\$1{,}146/yr}{(1\ \frac{lb}{ton})(2{,}493\ \frac{tons}{yr})(0.75)} = \$0.61$$

(4) Wood waste storage bin vent

a. Fabric filter (non-aspirated)

Capital cost

$5,000

Annual cost

Capital charges only

$PV = R \cdot PVF$

$n = 20$ yrs, $i = 12\%$

$5{,}000 = R\ (7.469)$

$= \$670$

$$C/B = \frac{\$670/yr}{(1\ \frac{lb}{ton})(1{,}500\ \frac{tons}{yr})(0.99)} = \$0.45$$

(5) Wood waste storage bin loadout

a. Telescopic chutes (same as 3)

b. Enclosure (3-sided)

$$C/B = \frac{\$6{,}100/yr}{(2\ \frac{lb}{ton})(1{,}500\ \frac{tons}{yr})(0.6)} = \$3.39$$

c. Enclosure, vent to cyclone

Assume a comparable system to hooding, vent to cyclone for sawing at sawmills is adaptable to this area.

Capital cost

$\$59{,}500 + 27{,}700$ (for 3-sided enclosure)

$= \$87{,}200$

Annual cost

$\$10{,}900 + 6{,}100 = \$17{,}000$

$$C/B = \frac{\$17{,}000}{(2\ \frac{lb}{ton})(1{,}500\ \frac{tons}{yr})(0.8)} = \$7.08$$

d. Enclosure, vent to fabric filter

Assume a comparable system to hooding, vent to fabric filter for sawing at sawmills is adaptable to this area.

Capital cost

$\$122{,}000 + 27{,}700$

$= \$149{,}700$

Annual cost

$\$42{,}000 + 6{,}100$

$= \$48{,}100$

$$C/B = \frac{\$48{,}100}{(2\ \frac{lb}{ton})(1{,}500\ \frac{tons}{yr})(0.99)} = \$16.20$$

2.18 AGGREGATE PROCESSING PLANTS

2.18.1 Process Description

This category presents a study of the fugitive dust emissions from sources at aggregate processing plants.

Aggregate processing plants produce a product consisting of rock or slag particles which are usually graded into specific size ranges. Aggregate may be obtained from gravel or carbonate rock deposits, or slag. It is used extensively as a base material for roadways and as an ingredient for the manufacture of portland cement concrete, and asphaltic concrete. It is also used in agriculture, glass manufacturing, metal refining, fireproofing and waste treatment.[1]

Ohio basically has three major sources of aggregate. These are 1) sand and gravel, 2) crushed stone, and 3) blast-furnace and steel furnace slag.[1]

Sand and gravel deposits are found extensively throughout the State with some production of the materials occurring in at least 68 counties. They basically occur in unconsolidated natural sedimentary deposits consisting of various sizes of stone particles. Sand is defined as any aggregate which will pass through a No. 4 sieve, while gravel is any rock particles or pebbles which are retained on a No. 4 sieve. The sand and gravel production in Ohio in 1977 was approximately 40 million tons with 22 million tons of that figure being gravel production.[1,2]

Crushed stone products in Ohio consist of limestone and dolomite. These minerals are essentially hard rocks that occur in beds or strata, and which generally require drilling and blasting in order to shatter the deposit into fragments small enough to be processed.[1] The crushed stone production in Ohio in 1977 was approximately 44 million tons.[3]

Slag is a nonmetallic byproduct of metallurigal operations, consisting of silicates and aluminosilicates of lime and other bases. It is produced simultaneously with iron in a blast furnace. It is also produced simultaneously with steel in open hearth, basic oxygen or electric arc furnaces. Slag is used as a substitute for aggregate produced from natural deposits.[1]

This study is concerned only with the fugitive dust emission sources at aggregate processing plants and not the mining or quarrying operations. For information on fugitive dust emission from mineral extraction operations, the reader is referred to Section 2.1.4. of this document.

As used in this study, an aggregate processing plant is a production facility where aggregate is crushed, pulverized, screened and classified into a variety of products. The specific processes employed by an aggregate processing plant depend on the type of aggregate and the customer's specifications on size and the amount of impurities. Process flow diagrams for sand and gravel, crushed stone and slag processing plants are illustrated in Figures 2.18-1 thru 2.18-3, respectively. The following narrative discusses each process in detail.

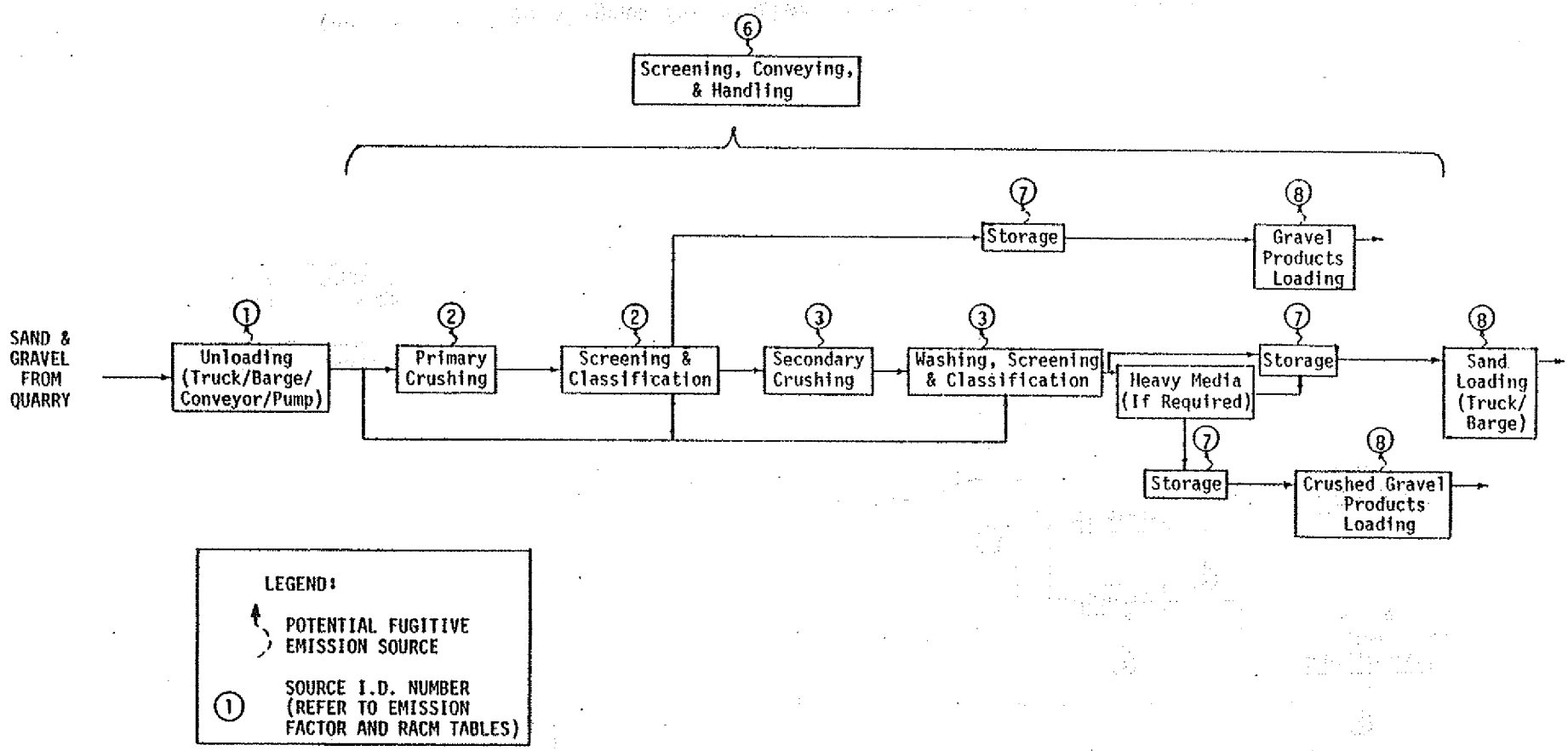

Figure 2.18-1. Simplified process flow diagram for sand and gravel processing plants and associated fugitive particulate emission sources.

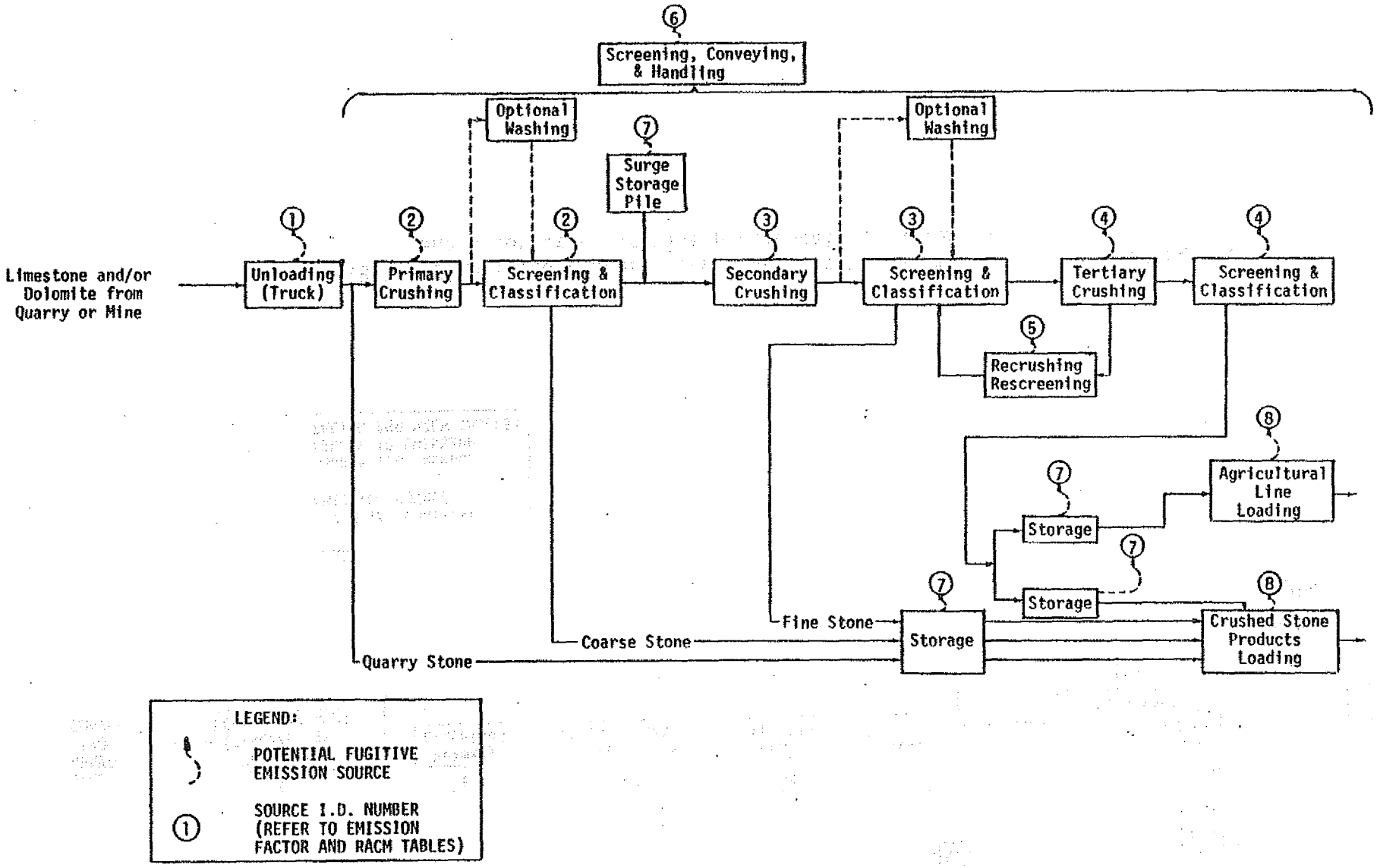

Figure 2.18-2. Simplified process flow diagram for crushed stone processing and associated fugitive particulate emission sources.

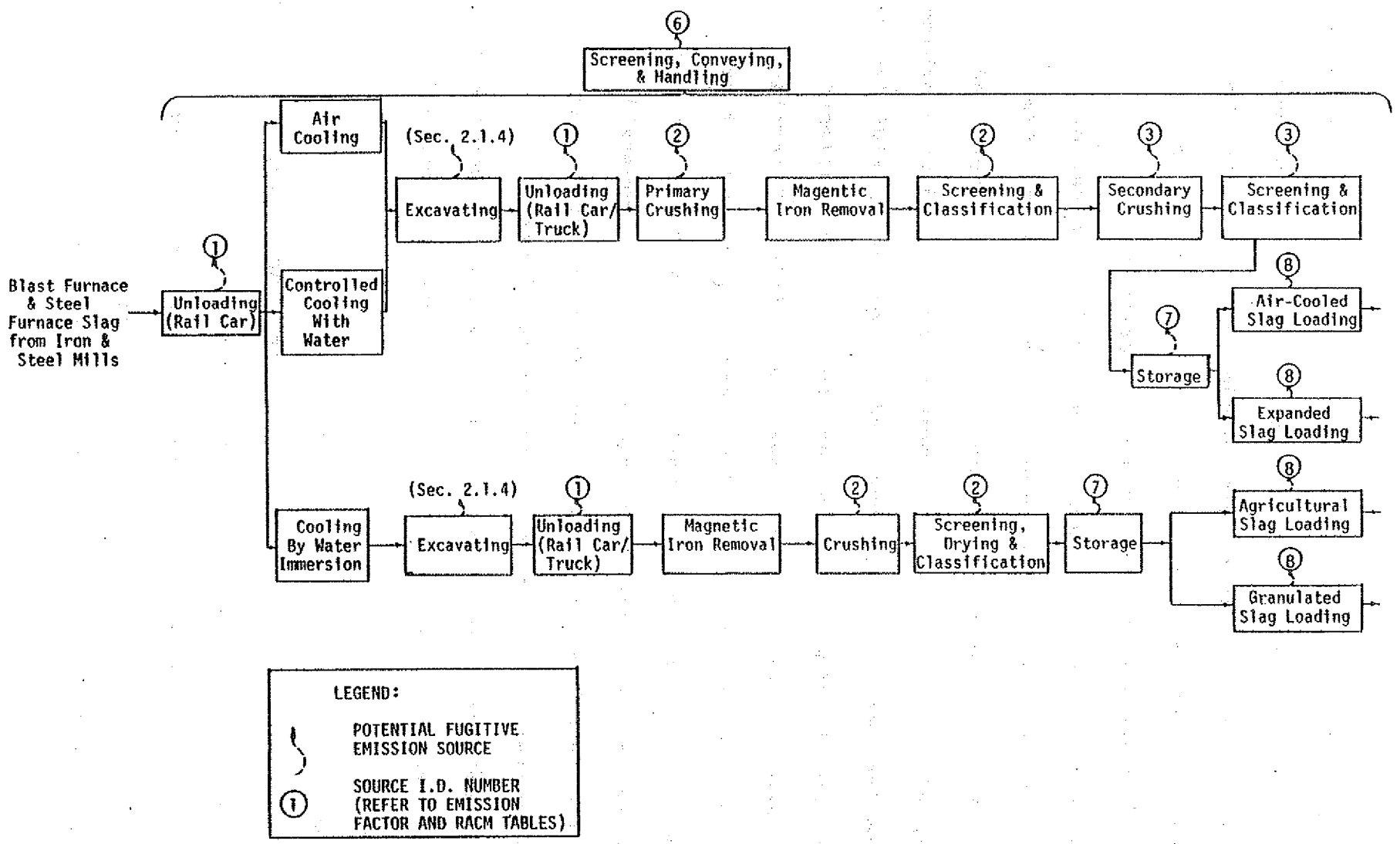

Figure 2.18-3. Simplified process flow diagramfor slag processing and associated fugitive particulate emission sources.

Sand and gravel deposits are either dredged or quarried depending on the location of the deposit. The material is extracted by power shovels, draglines, cableways or suction dredge pumps. It is then usually transferred to the processing plant through the use of suction pumps, earth movers, barges, trucks or conveyors.[4]

At the processing plant, the material may undergo a variety of process operations depending on the purpose of the plant and the type of material being processed. The operations at a typical sand and gravel processing plant may include primary and secondary crushing, screening, conveying, washing, and heavy media cleaning in addition to the unloading and loading activities and the open and enclosed storage of processed and partially processed materials. Generally, sand and gravel operations tend to differ significantly from other types of mineral processing plants in that less processing equipment is used and the raw material and processed material are generally wet. Consequently these operations emit less fugitive dust than from comparable crushed stone and slag processing plants.

Sand and gravel operations typically produce a wide spectrum of products ranging from various sizes of sand and gravel to crushed gravel products.

Typical operations at a crushed stone processing plant may include primary, secondary, and tertiary crushing, screening, conveying washing, unloading and loading activities, and open and enclosed storage of processed and partially processed aggregates. These operations produce a variety of crushed stone products ranging in size from quarry stone to the pulverized stone used for agricultural lime.

Lastly, typical operations at slag processing plants begin with the unloading of hot slag into slag pits from railroad cars. The slag is then either air-cooled or cooled with water sprays or by immersion in water. After cooling, the slag is excavated and hauled to an unloading area. Subsequent processing operations may include primary and secondary crushing, screening, conveying, iron removal, loading, and open and enclosed storage of processed and partially processed material. Drying of slag may also be performed; however, such processing is rarely performed.

These operations may also produce a variety of slag products as shown in Figure 2.18-3. The air-cooled slag product is produced from molten slag that has been allowed to solidify under atmospheric conditions. Expanded slag product is produced from molten slag which has been treated with controlled quantities of water in order to speed solidification and increase the cellular structure. This type of slag is consequently a light-weight product. Granulated slag is produced from molten slag which has been quickly quenched in water so as to produce a glassy, granular, sand-size product. Agricultural slag is simply granulated slag which has been finely pulverized for use as a soil neutralizer.[1]

Although there is a variety of operations at aggregate processing plants, each differing in equipment and process employed, a general process description can be given which covers all three types of plants. The process description begins with unloading.

Generally, unloading operations consist of truck dumping into a hoppered feeder which subsequently feeds into a primary crusher. The crushed material and the grizzly troughs are then transported via belt conveyor to either a surge pile or silo for temporary storage.[5]

The crushed material in the surge pile is usually removed by use of a series of vibrating feeders under the surge pile. These feeders distribute the material onto a belt conveyor which moves the material to a scalping screen. At the scalping screen, the material is segregated into three fractions: oversize, undersize and troughs. The oversize material is fed into a secondary crusher in order to obtain further size reduction. The undersize material is discharged to storage since it needs no further processing. The troughs (unwanted fines and screenings) are removed from the process and are stockpiled as crusher-run material (total unscreened product of a stone crusher).[1,6]

The discharge from the secondary crushers (usually 1 inch or less in size) is conveyed to a secondary screen for sizing. The oversize material from this screen is conveyed or discharged directly to a tertiary crusher (if required). (The crushed material from the tertiary crusher is usually routed back to the secondary screen for sizing.) The undersize material from the secondary screens goes directly to the finish screens. The trough material from the secondary screens is also conveyed to the finish screens. The subsequent products are gravity fed to finish-product storage bins or are stockpiled in open storage piles by using conveyors or trucks.[7]

Some product specifications, such as for concrete aggregate, require washing of the material. This is generally performed after the aggregate has been initially crushed in the primary crusher. Washing is performed by dropping the material onto fine mesh screens, onto which a heavy water spray is directed.

The finished product at an aggregate processing plant is stored either in open piles or in storage bins. Loading from open storage piles is generally accomplished through the use of front-end loaders. Loading from elevated silos is performed by gravity dumping into open-bed trucks.

As previously mentioned, there is considerable variety in the type of equipment used in aggregate processing. With respect to crushing equipment, there are four types of crushers used in the industry: jaw, gyratory, roll and impact crushers.[8]

Jaw crushers are generally used by the industry for primary crushing. The most commonly used jaw crusher is the Blake or double-toggle type which is illustrated in Figure 2.18-4. The lesser-used single-toggle jaw crusher is shown in Figure 2.18-5. The aggregate in these crushers is subjected to crushing by compression against a fixed jaw.[10]

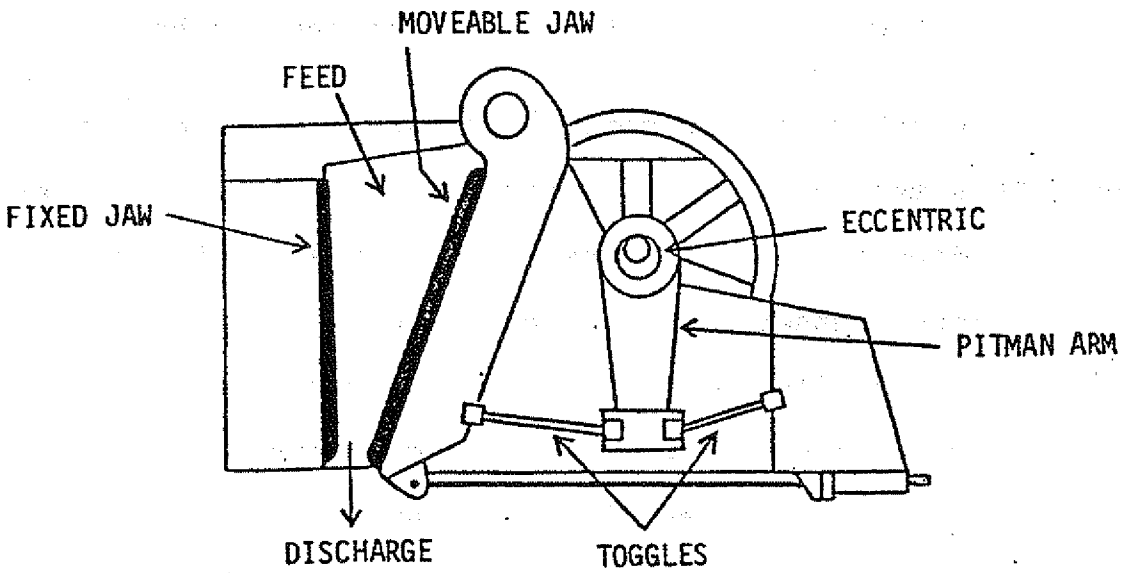

Figure 2.18-4. Double-toggle jaw crusher.[9]

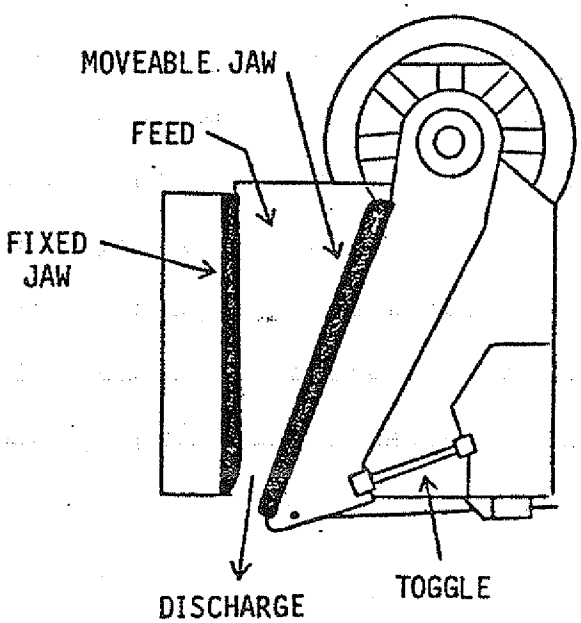

Figure 2.18-5 Single-toggle jaw crusher.[9]

Gyratory crushers are commonly employed for secondary and tertiary crushing. This type of crusher is similar to a jaw crusher, except that circular jaws are used to crush the material. The three basic types of gyratory crushers are pivoted-spindle, fixed-spindle and cone. The fixed-spindle and pivoted-spindle crushers are used for primary and secondary crushing, while the cone crushers are the most commonly used crushers for secondary and tertiary crushing. The pivoted-spindle and cone gyratory crushers are illustrated in Figures 2.18-6 and 2.18-7, respectively.[11]

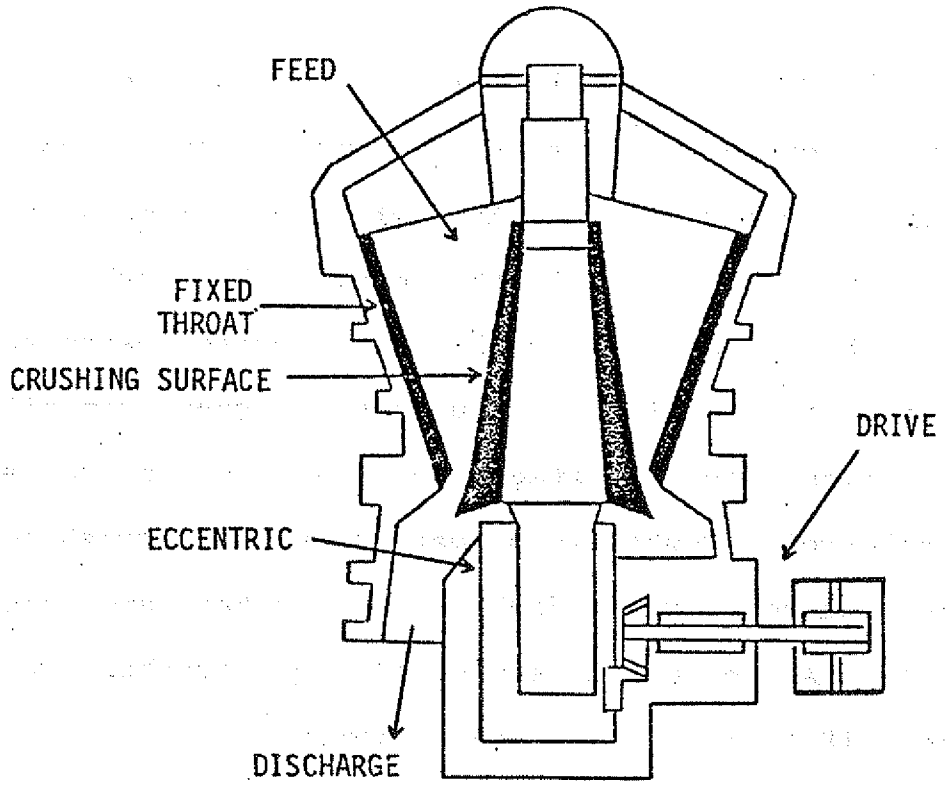

Figure 2.18-6. Pivoted-spindle gyratory crusher.[12]

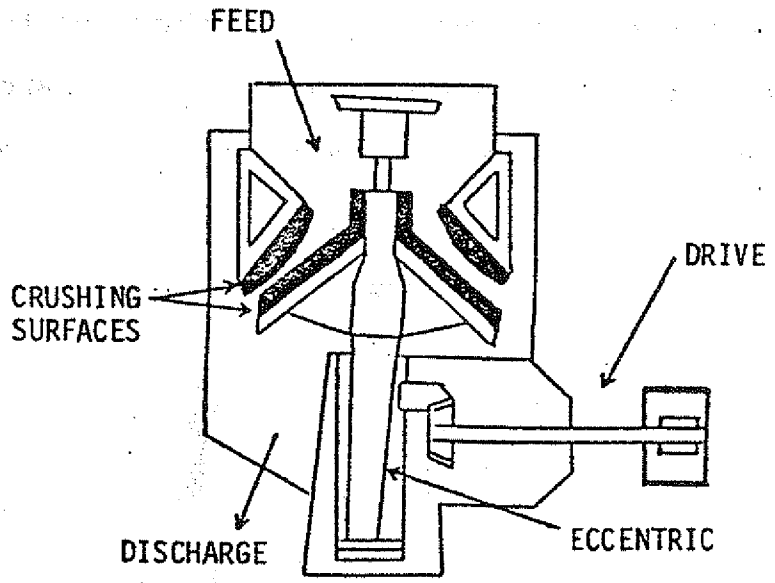

Figure 2.18-7. Cone gyratory crusher.[12]

Single-roll and double-roll crushers consist of one or two rotating rolls which crush the material by compression. Crushing is accomplished in a single-roll crusher by the action of a single rotating roll upon a fixed crushing plate. In the double-roll crusher, crushing is performed by two parallel rolls which rotate toward each other. Single-roll and double-roll crushers are used primarily at intermediate or final size reduction stages and frequently at portable plants. The single-roll crusher is primarily used for crushing soft materials such as limestone, while double-roll crushers are used for hard materials. A single-roll and double-roll crusher are illustrated in Figures 2.18-8 and 2.18-9, respectively.[13]

Other crushing equipment commonly used in aggregate processing are impact crushers. These crushers include hammermills and impactors (Figures 2.18-10 and 2.18-11). An impact crusher uses fast, rotating impellers or hammers to shatter the falling aggregate. Due to the high size reduction capabilities of those units, they are primarily used where it is desirable to have a wider range of particle sizes and a larger proportion of fines, such as for agricultural aggregate.[15]

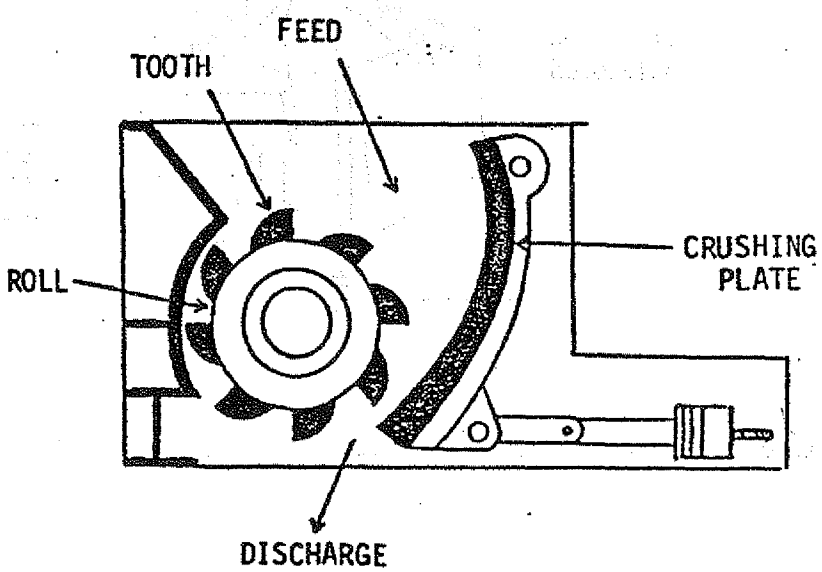

Figure 2.18-8. Single-roll crusher.[14]

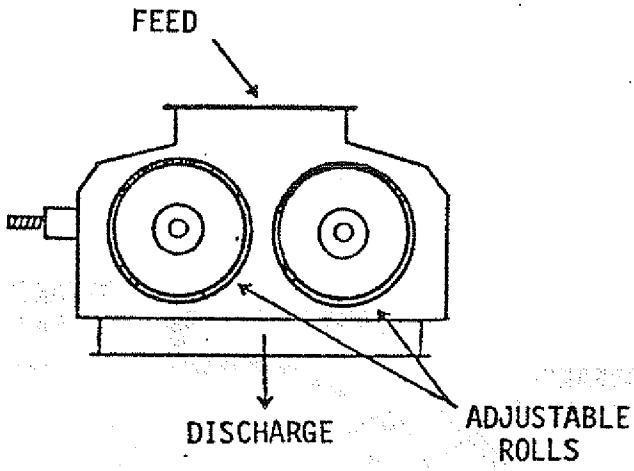

Figure 2.18-9. Double-roll crusher.[14]

Because impact crushers generate a large quantity of fine particles and impart high velocities to the particles as a result of the whirling hammers, fugitive dust emissions are usually much greater from the impact crushers than other types of crushers.[17]

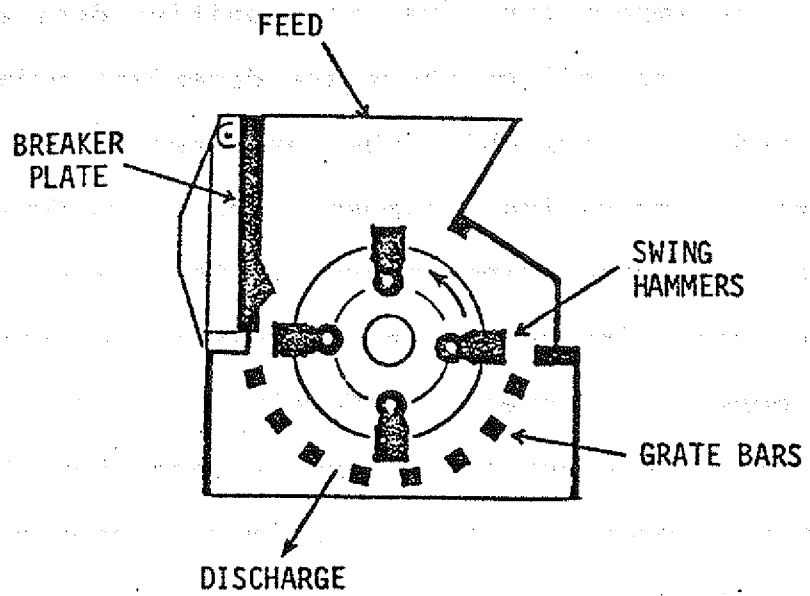

Figure 2.18-10. Hammermill crusher.[16]

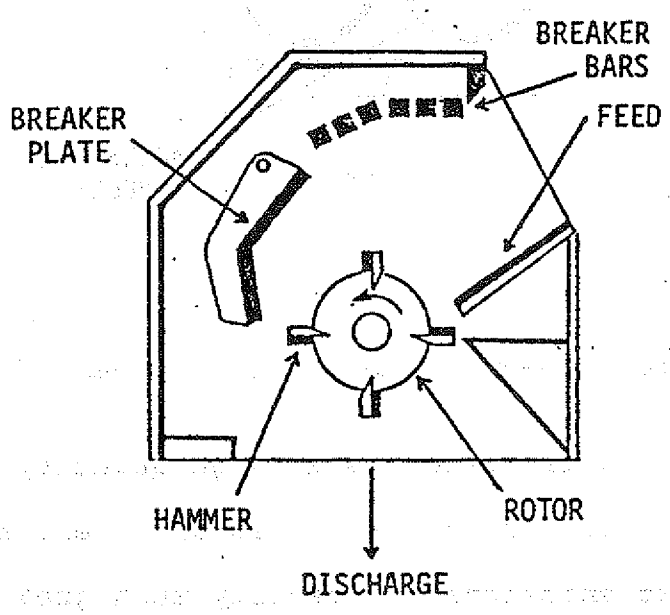

Figure 2.18-11. Impact crusher.[16]

In contract to impact crushers, the fugitive dust emissions from jaw, gyratory, cone and roll crushers are dependent primarily on the degree of size reduction for which they are used.[17]

With respect to screening equipment, there are four basic types used in the aggregate processing industry. These are grizzlies, shaking screens, vibrating screens and revolving screens.[18]

Grizzlies consist of several uniformly spaced horizontal or inclined bars which are wider on the top surface than the bottom surface to prevent clogging. They are primarily used to remove fines before primary crushing. There are three types of grizzlies which are used by the industry. These are stationary, cantilevered (one end fixed and the discharge end vibrated), and mechanically vibrating types. A vibrating grizzly is illustrated in Figure 2.18-12.[18]

Shaking screens consist of a rectangular frame with perforated plate or wire cloth as a screening medium. These screens are mechanically shaken to assist separation. They are primarily used for screening coarse material (1/2 inch or larger).[19]

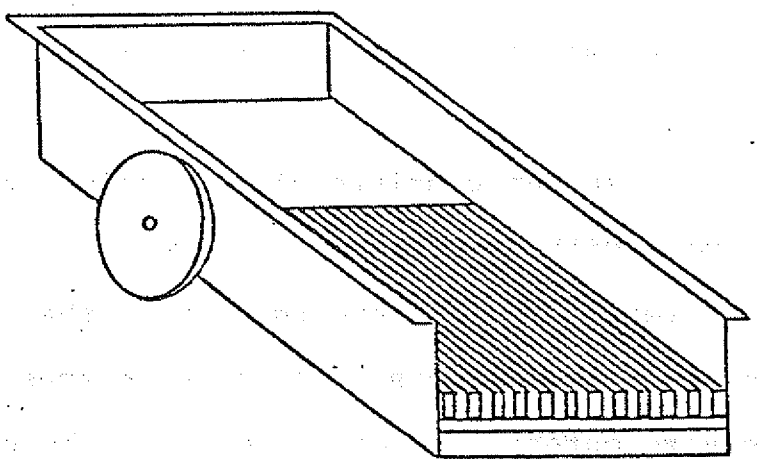

Figure 2.18-12. Vibrating grizzly.[20]

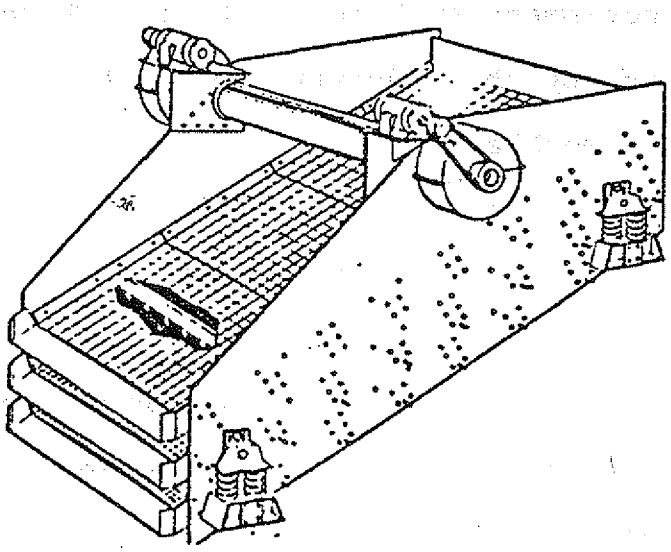

Figure 2.18-13. Vibrating screen.[20]

The most commonly used type of screen in the aggregate processing industry is the vibrating screen. It consists of an inclined, flat or slightly convex screening surface which is rapidly vibrated in a plane normal to the screening surface. This type of screen may have from one to three screening decks. A vibrating screen is shown in Figure 2.18-13.[21]

A revolving screen consists of an inclined cylindrical frame which is wrapped with a screening surface of wire cloth or perforated plate. The material is fed into the top of the frame as the screen is being rotated. The undersize material passes through the screen, and the oversize material is discharged out the other end.[22]

An aggregate processing plant also employs a number of material handling devices. The most commonly used devices include feeders, belt conveyors, bucket elevators and screw conveyors.[23]

Feeders are used to discharge material at a uniform rate into processing equipment such as crushers. There are five basic types which are used by the industry: apron, belt, reciprocating-plate, vibrating and wobbler.[23]

Apron feeders consist of overlapping metal pans or aprons which are hinged together by chains to form a conveyor that is supported by rollers.[23]

Belt feeders are simply short conveyor belts with roller supports, where the material feed rate is controlled by adjustable gates.[23]

Reciprocating-plate feeders consist of a horizontal plate which is driven in a oscillating motion that causes the material to move forward. The material feed rate is controlled by adjusting the frequency and length of the oscillating motion.[24]

Vibrating feeders are similar to reciprocating-plate feeders, except that the feed rate is controlled by the slope of the feeder bed and the amplitude of the vibration.[24]

Wobbler feeders consist of a series of closely spaced elliptical bars that are mechanically rotated, thereby causing the oversize material to tumble to the discharge end of the feeders and the undersize material to pass through the bed spaces. The material feed rate in this type of unit is controlled by the bar spacing and the speed of the rotating bars.[24]

The most commonly used method of material handling is the belt conveyor. A belt conveyor consists of an endless belt that is supported by a series of idlers which are angled such that the belt forms a trough. The belt is stretched over a drive pulley at one end and a tail pulley at the other. A belt conveyer system which is used to transport material to another conveyor is illustrated in Figure 2.18-14.[25]

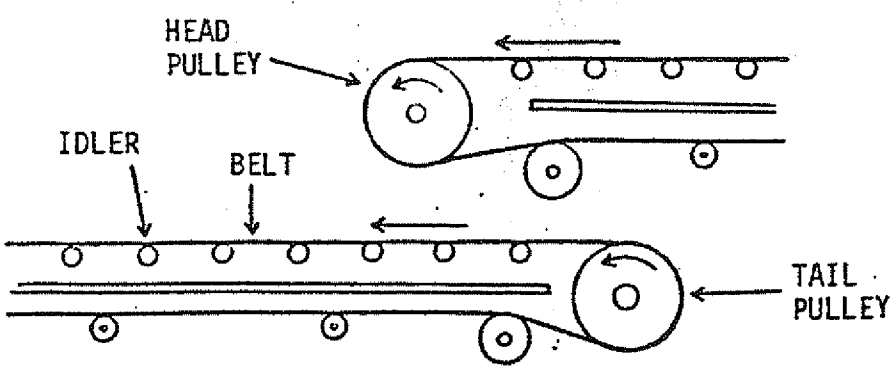

Figure 2.18-14. Belt conveyor transfer point.[26]

Another means of elevating material is through the use of bucket elevators. These elevators consist of buckets attached to a single-or double-strand chain or belt which is driven by a head-and-foot assembly. The three most common types of bucket elevators are high-speed centrifugal-discharge, slow-speed positive- or perfect-discharge and continuous discharge. These are depicted in Figure 2.18-15.[27]

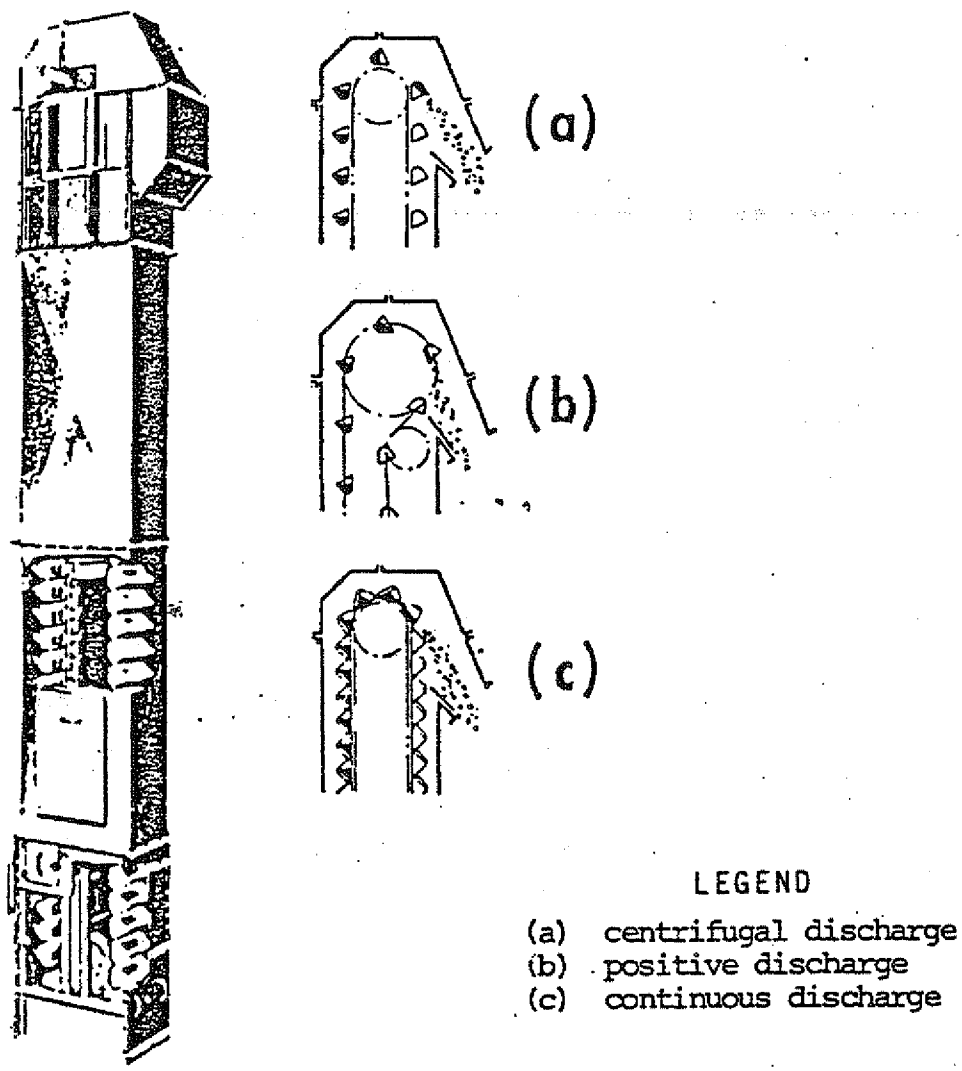

Figure 2.18-15. Types of bucket elevators.[28]

The centrifugal discharge elevator consists of evenly spaced buckets on a single-strand chain or belt. As the buckets round the tail pulley, they scoop material and elevate it to the discharge point at the head pulley. The material is discharged from the bucket by the centrifugal force of the bucket rounding the head pulley.[27]

The positive-discharge elevator is similar to the centrifugal-discharge elevator, except that it has a double-strand chain and a sprocket set below the head pulley. These added devices bend the strands causing the buckets to be totally inverted and resulting in a positive discharge.[29]

The continuous-discharge elevator uses closely spaced buckets attached to either a single- or double-strand belt or chain. The buckets are loaded directly during ascent and are discharged by gravity free fall. The back of each preceding bucket is used as a discharge chute.[29]

Lastly, screw conveyors are also used for material handling and elevating. They consist of a steel shaft with a helical fin that pushes material along the trough when the shaft is rotated.[29]

Heavy media cleaning equipment is infrequently used at aggregate processing plants. Generally only a few sand and gravel plants employ heavy media cleaning equipment. For a description of this type of equipment, see Section 2.19.1.

Figures 2.18-1 through 2.18-3 also identify the sources of fugitive dust emissions. Those sources are 1) raw material unloading, 2) primary, 3) secondary and 4) tertiary crushing and screening, 5) recrushing and screening, 6) screening, conveying, and handling, 7) open storage and 8) finished product loading. Inplant haul roads and vehicle movement around open storage piles are also significant

sources of fugitive dust emissions. These sources are discussed in detail in Section 2.1.1 and, consequently, will not be discussed in this section. Also, for further information with respect to aggregate storage piles, material handling and mineral extraction at aggregate processing plants, the reader may want to refer to Sections 2.1.2 through 2.1.4.

2.18.2 Fugitive Dust Emission Factors

The estimated emission factors for aggregate processing plant fugitive dust sources, as identified in Section 2.18.1, are summarized in Table 2.18-1. The emission factor reliability ratings indicate that these engineering estimates are applicable only to a group of such sources and are of questionable accuracy for site-specific estimates.

The quantification of fugitive dust emissions from aggregate processing plants is extremely difficult due to the variety of factors that may affect the emissions. Such factors include the moisture content of the raw material, the type of raw material processed, the type of equipment used and the operating practices employed.[30]

The moisture content of the raw material may vary from zero to several percent depending upon the geographic and climatic conditions. The degree of wetness in the raw material will have a significant affect on the initial processing operations. The surface wetness will cause fine particles to adhere to the larger pieces of aggregate, thereby reducing the potential for fugitive dust emissions. Thus, surface wetness is an important factor in minimizing the fugitive dust emissions from primary crushing and the operations preceding primary crushing. In subsequent operations, such as secondary crushing, attrition and moisture evaporation result in more surface area being exposed. Thus, the previous dust suppression effects resulting from surface moisture diminish and may become insignificant.[31]

TABLE 2.18-1. FUGITIVE DUST EMISSION FACTORS FOR AGGREGATE PROCESSING PLANTS

Source	Emission factor	Reliability rating	Reference
(1) Unloading (truck)			
Sand & gravel	0.02 lb/ton unloaded	E	33
Crushed stone	0.04 lb/ton unloaded	E	33
Slag	0.02 lb/ton unloaded	E	33
(2) Primary crushing & screening			
Sand & gravel	0.1 lb/ton crushed[a]	NA	34
Crushed stone	0.5 lb/ton crushed[b]	c	35
Slag	0.5 lb/ton crushed[b]	E	35
(3) Secondary crushing & screening			
Sand & gravel	0.1 lb/ton crushed[a]	NA	34
Crushed stone	1.5 lbs/ton crushed[b]	c	35
Slag	1.5 lbs/ton crushed[b]	E	35
(4) Tertiary crushing & screening			
Crushed stone	6.0 lbs/ton crushed[b]	c	35
(5) Recrushing & rescreening			
Crushed stone	1.0 lbs/ton crushed[b]	c	35
(6) Screening, conveying, & handling			
Sand & gravel	0.3 lb/ton handled	E	36
Crushed stone	2.0 lbs/ton stored[d]	c	35
Slag	2.0 lbs/ton stored[d]	E	35
(7) Storage piles[e]			
Loading onto piles			
Sand & gravel	0.0012 lb/ton loaded	E	37
Crushed stone	0.0014 lb/ton loaded	E	37
Slag	0.0058 lb/ton loaded	E	37
Loading out			
Sand & Gravel	0.0023 lb/ton loaded	E	37
Crushed stone	0.0029 lb/ton loaded	E	37
Slag	0.012 lb/ton loaded	E	37
Wind erosion			
Sand & gravel	0.47 lb/ton stored	E	37
Crushed stone	0.093 lb/ton stored	E	37
Slag	0.074 lb/ton stored	E	37
Vehicular traffic			
Sand & gravel	0.064 lb/ton stored	E	37
Crushed stone	0.032 lb/ton stored	E	37
Slag	0.13 lb/ton stored	E	37

Continued

TABLE 2.18-1. FUGITIVE DUST EMISSION FACTORS FOR AGGREGATE PROCESSING PLANTS

Source	Emission factor	Reliability rating	Reference
8 Loading (truck)			
Sand & gravel	0.02 lb/ton loaded	E	33
Crushed stone	0.04 lb/ton loaded	E	33
Slag	0.02 lb/ton loaded	E	33

NA = Not available.

[a] Emission factor represents total emissions from primary and secondary crushing and screening.

[b] Based on raw material entering primary crusher.

[c] Based on an assumption of 20 percent of the primary crusher throughput undergoing recrushing and rescreening.

[d] Based on units of stored product.

[e] Assuming $S_{cs} = S_s = 2$, $S_{sg} = 10$, $M_{cs} = 2$, $M_{sg} = 5$, $M_s = 1$, $D_{cs} = D_{sg} = 76$, $D_s = 60$, $d_{cs} = d_{sg} = d_s = 225$, $K_{cs} = 0.25$, $K_{sg} = K_s = 1.0$, $Y_{cs} = Y_{sg} = Y_s = 3$, $U = 10$, $f = 26$, and substituting these values into the equations presented in Section 2.1.2.

The type of raw material processed is also a significant factor in the degree of fugitive dust emissions from aggregate processing sources. The extent of dust emissions appears to be related to the softness or hardness of the raw material itself. Soft aggregates produce a larger amount of screenings than do hard aggregates due to their greater friability. As a result, the processing of softer aggregates tend to produce more fugitive dust emissions. For example, the major rock types and their degree of hardness in order of increasing hardness is as follows: limestone and dolomite, sandstone, granite, trap rock, quartzite and quartz. Thus, one would expect more fugitive dust emissions from the processing of limestone than quartz.[32]

The type of equipment and operating practices used are also significant factors which affect the extent of fugitive dust emissions. The type of equipment used is generally dependent a number of factors including the type of quarry, the material processed and the final product desired. The extent of fugitive dust emissions from processing equipment is generally dependent on the size distribution of the processed material and the velocity imparted to the material.[32]

Since the above-mentioned factors may significantly affect the uncontrolled fugitive dust emissions, they also therefore, may directly affect the reliability of the selected emission factors presented in Table 2.18-1.

The emission factors for unloading operations (truck dumping) were taken from the published USEPA emission factor (0.04 lb/ton) for truck dumping of aggregate. However, for sand and gravel and slag unloading operations, a value of half the above factor was used due to the larger size of the broken slag being dumped and also due to the higher moisture content of the sand and gravel and the water quenched slag. This 50 percent reduction in the emission factor

was based on the estimated control efficiency for watering, which was assumed to be comparable to the effects of higher moisture content and larger aggregate size. As a result of these estimations, the reliability of these emission factors is considered poor.[33]

The emission factors for primary, secondary and tertiary crushing and screening, and recrushing and rescreening were taken from published USEPA emission factors for sand and gravel processing,[34] and stone quarrying and processing.[35] Since comparable processes and equipment are found at crushed stone and slag processing plants, and because there is a similarity in visible emissions, the emission factors for stone processing were also used for slag processing operations. The reliability of the emission factor for sand and gravel processing is not known. An average reliability was reported for the emission factors for the above operations at stone processing plants. Since the emission factors for slag processing were based on only engineering judgment and visual observations, those factors should be considered of poor reliability.

For screening, conveying, and handling of aggregate, the emission factor for sand and gravel operations was based on a reported value for transfer and conveying of sand. The reported reliability of this emission factor was poor.[36] The emission factor for crushed stone was taken from published USEPA data. This factor was rated as an average reliability.[35] The emission factor for crushed stone was used for slag operations due to the similarity of the materials and equipment used. Because of this assumption, the reliability rating for the slag operations was listed as poor.

The emission factors for open storage pile activities are divided into four sources of fugitive dust: loading onto piles (continuous load-in), loading out, wind erosion, and vehicular traffic. These factors were obtained by using the empirical equations presented in Table 2.1.2-5 of this study and the assumed input variables presented in footnote (e) of Table 2.18-1. Since the assumed input variables are estimates based on engineering judgment, and the deriviation, accuracy, and limitations of the equations were not available, the emission factors presented should be considered of poor reliability.[37]

The emission factors presented for the loading activities are those identified for truck unloading. This is a very conservative estimate of the uncontrolled fugitive dust emission generated by loading, since the material loaded is generally drier and finer that which is unloaded. No emission factors were found in the literature for truck loading per se. Again, these factors should be considered as of a poor reliability.

Emission factors for haul roads are not presented in this section. The reader should refer to Section 2.1.1.

2.18.3 Particle Characteristics

There is limited data on general particle characteristics of fugitive dust emissions from aggregate processing plants.

One source does report that fugitive dust emissions from limestone storage, handling and transfer typically have a mean particle diameter of 3 to 6 μm, 45 to 70 percent of which are less than 5 μm.[38]

Other sources have reported information on particle size distribution from stack emissions from hammermills, screening operations and a bagging house. This data should give an indication of the particle size distribution from similar fugitive dust sources at aggregate processing plants. The data is as follows:[39,40]

Operation	Particle size distribution
Hammermill (crusher)	30% < 3 μm, 47% < 5 μm, 60% < 10 μm 74% < 20 μm, 86% < 40 μm
Screening	46% < 3 μm, 72% < 5 μm, 85% < 10 μm 95.5% < 20 μm, 98.8% < 40 μm
Bagging house	71% < 5 μm, 87.3% < 10 μm 96% < 20 μm, 98.8% < 40 μm

No other data is available concerning particle characteristics from the fugitive dust sources at aggregate processing plants.

The American Conference of Governmental Industrial Hygientists has identified limestone particles as nontoxic nuisance particulates if other toxic impurities are not present.[41] However, data on other toxic materials that may be associated with limestone were not available.

Exposure to fugitive dust emissions from sand and gravel operations may be harmful to human health depending on the amount of silica (SiO_2) present in the dust and the length of exposure. Inhalation of silica dust over extended periods of time has been known to cause a respiratory ailment known as silicosis. Silicosis is a chronic lung disease characterized by diffuse fibrosis.

More frequently, fugitive dust emissions from aggregate processing plants result in the creation of nuisance conditions, rather than causing any significant health problems.

2.18.4 Control Methods

A summary of the control methods available for sources of fugitive dust emissions from aggregate processing plants is presented in Table 2.18-2, along with their control efficiencies and costs. This section will discuss each of these control methods.

In general, there are two basic, operationally proven methods of controlling dust emissions from process equipment at aggregate processing plants. These include the use of wet sprays, preferably containing a surface active ingredient or wetting agent that reduces water surface tension, and the use of hoods, ductwork, and fabric filters. Many existing operations use a combination of these two techniques, where wet suppression is used in the early process stages (larger-sized aggregate) and a dry captive system is used in the latter process stages (smaller-sized aggergate).[42]

A wet suppression system may be used to control fugitive dust emissions from all of the sources identified in this study. The application of water, with or without chemical wetting agents, is accomplished by use of spray bars and nozzles which are located at the critical dust producing points such as transfer points and screening areas. Generally, the addition of a chemical wetting agent to the water is necessary, especially in the intermediate and final processing stages, because the addition of water alone can result in excessive moisture being added to the aggregate. This excessive moisture may cause the blinding of screening equipment and/or the inability to achieve product specifications. The addition of a chemical wetting agent drastically reduces the water needed (about 4 to 1) for effective dust suppression. It has been reported that 75 to 85 percent of all crushed stone plants could use a wet suppression system. The other plants, because of stone type and product size, cannot solely use wet suppression and must rely on either dry collection systems or a combination system of dry collection and wet suppression.[43] Recent technological innovations, however, have produced an electrostatic spray system and a foaming agent spray system which may be used in lieu of certain dry collection systems.

The type, number, and location of application points, as well as the amount of water and wetting agent used are dependent on a number of factors which include aggregate size, production rate and equipment accessibility. Generally, the amount of water/wetting agent applied by a complete wet suppression system is about 1.5 gallons per ton of aggregate production. Without the use of chemical agents, the necessary water application rate could well be three or four times higher.[44]

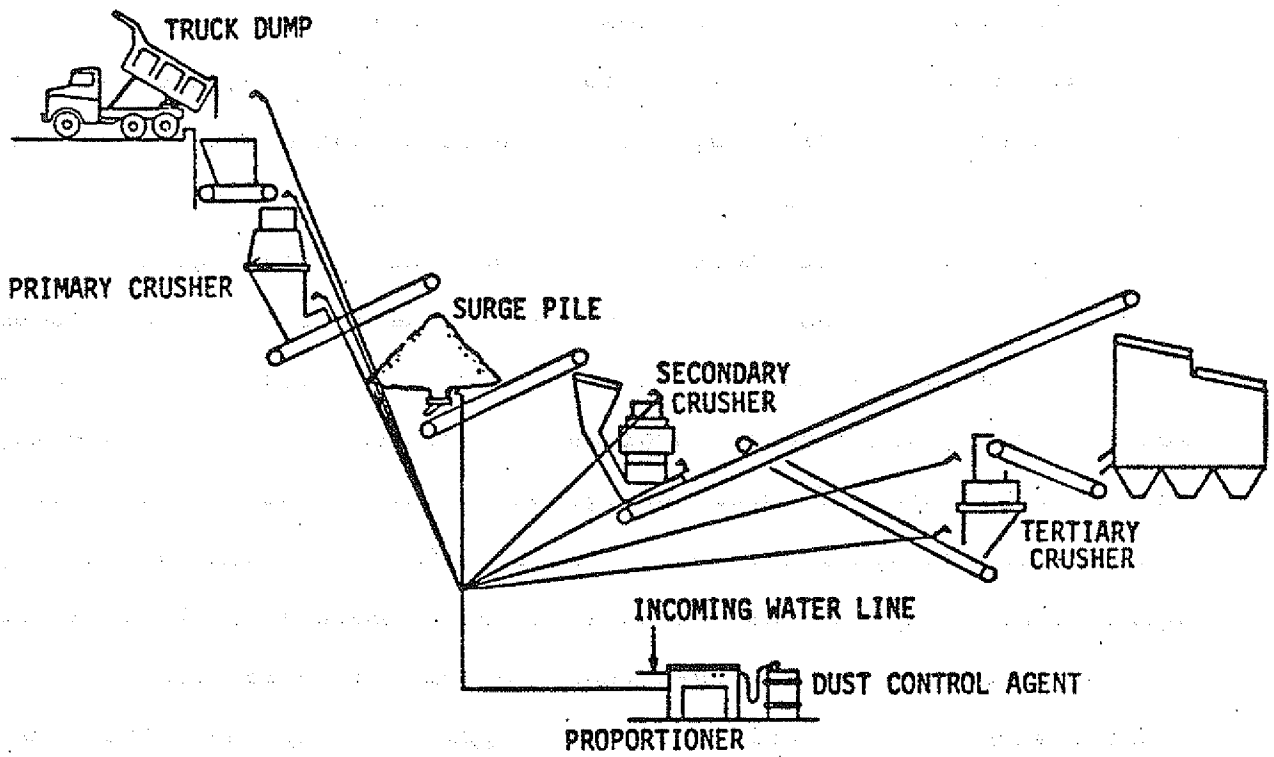

Figure 2.18-16. Wet dust-suppression system.[45]

At a typical aggregate processing plant, water/wetting agent spray application points are usually applied at truck unloading, at the entrance and exits of the crushers, at material transfer points such as belt conveyor transfer points (Figure 2.18-14), at the underfeed from surge piles to belt conveyors, and at the belt conveyor loadouts to open storage piles. Figure 2.18-16 illustrates the design of a typical wet suppression system at a crushed stone plant. Figure 2.18-17 depicts a typical spray system applied at the discharge point from a crusher to a belt conveyor.

A wet suppression system reduces the emission of fugitive dust particles by 1) causing the smaller particles to agglomerate, 2) causing the smaller particles to adhere to large pieces of aggregate and 3) increasing the density of particles. The use of a wetting agent (surfactant) aids this dust suppression effect by reducing the surface tension of water, and, thereby, allowing more particle surface area to become wet.

It has also been reported that wet suppression systems using foams instead of wetting agents have been effective in controlling fugitive dust emissions at several mining and processing operations. However, little experimental data across a range of aggregate processing industries is available. Therefore, the effectiveness of this technique is not fully known.[47]

The fugitive dust emissions generated at crushers, screens, conveyor transfer points, and bins may also be controlled by capturing and venting such emissions to a collection device such as a fabric filter (most commonly used device). Wet scrubbers may also be used; however, they are seldom employed at aggregate processing plants. The above sources may be controlled by using one centrally located fabric filter or by several strategically located fabric filters.

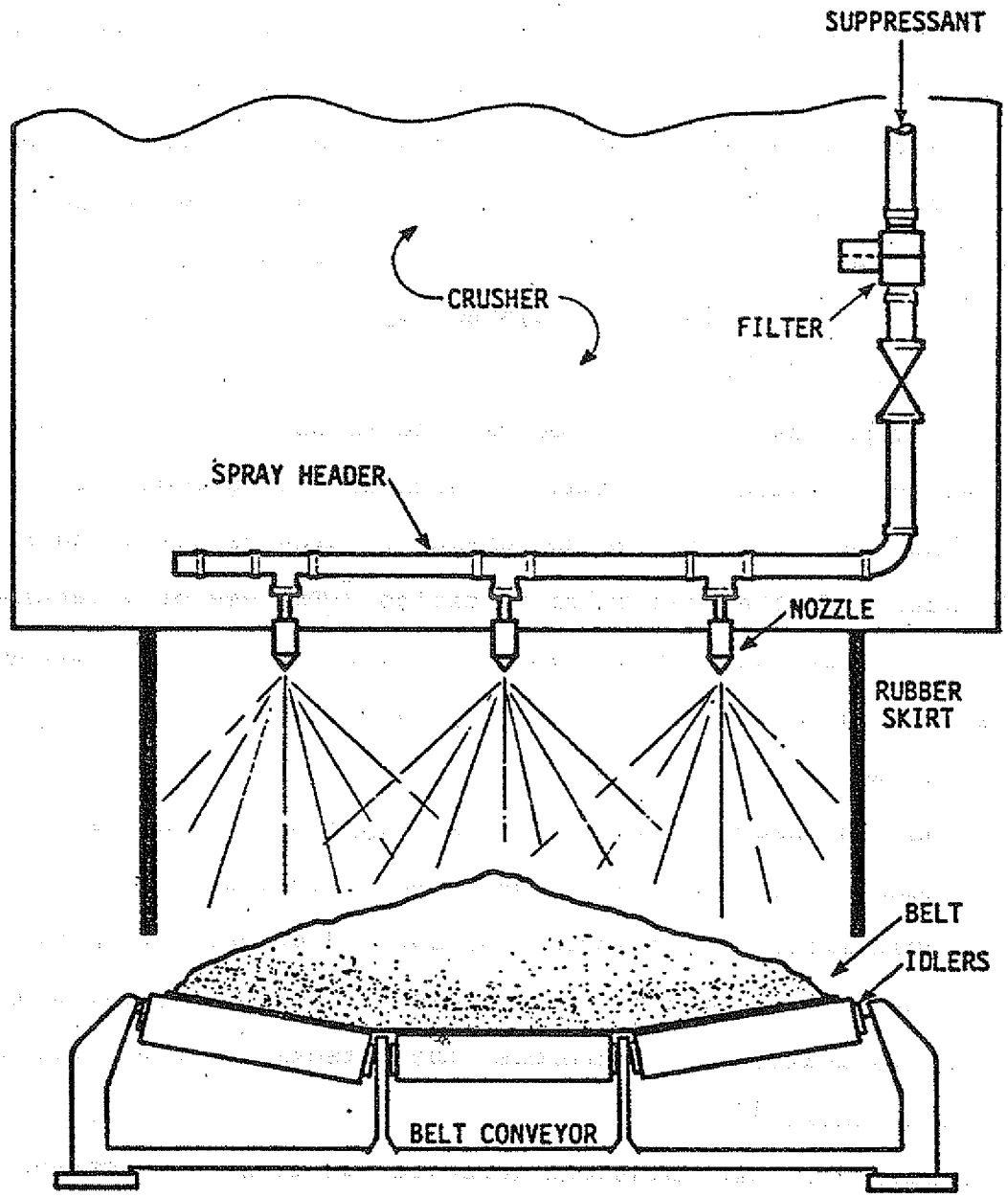

Figure 2.18-17. Wet dust-suppression application at a crusher discharge point.[46]

In order for effective control by fabric filters, an adequate capture system must be designed for each of the above dust sources. For example, the design of a hood enclosure for a material transfer point is dependent on the free-fall distance involved. Figure 2.18-18 and Figure 2.18-19 show an effective hood configuration for free-fall distances of less than or greater than 3 feet.

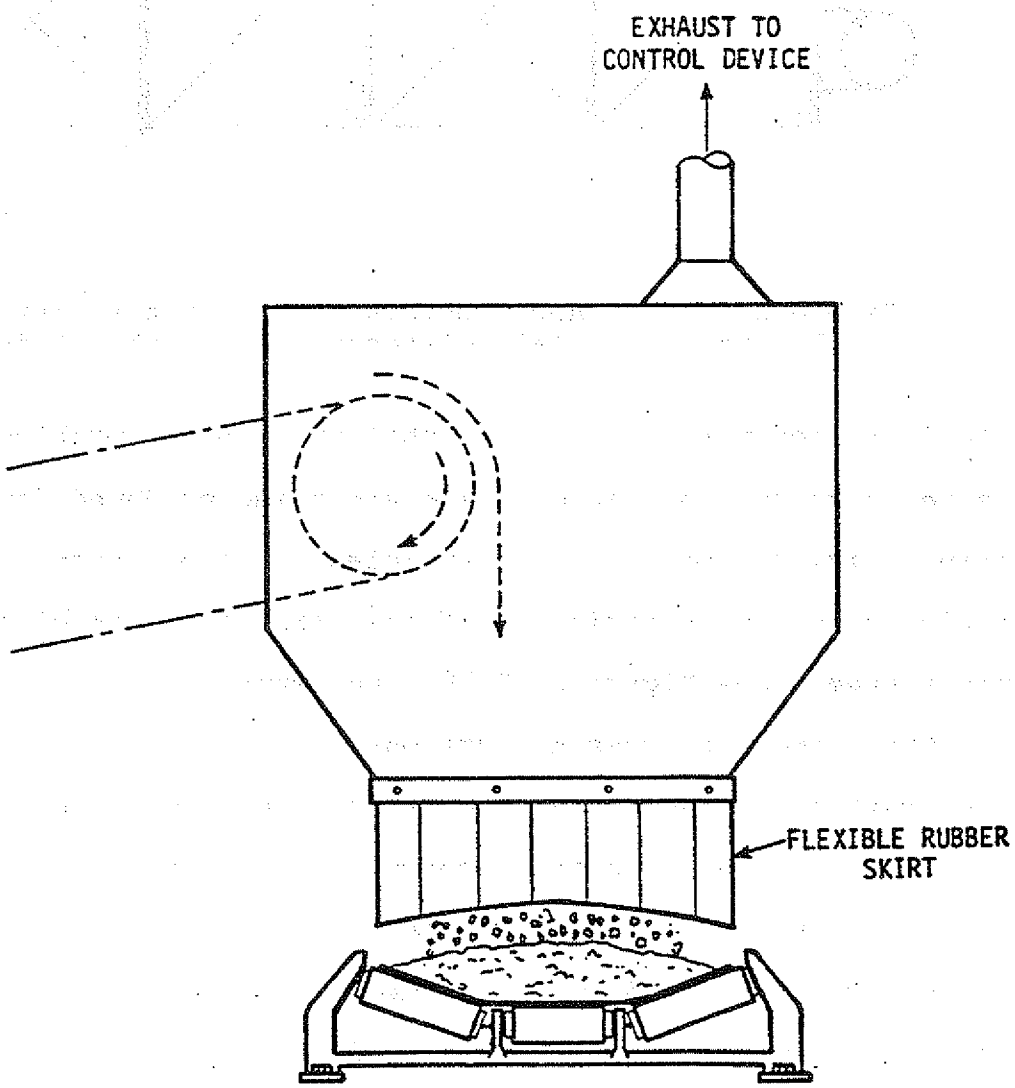

Figure 2.18-18. Hood configuration for a transfer point having a free-fall distance less than 3 feet.[48]

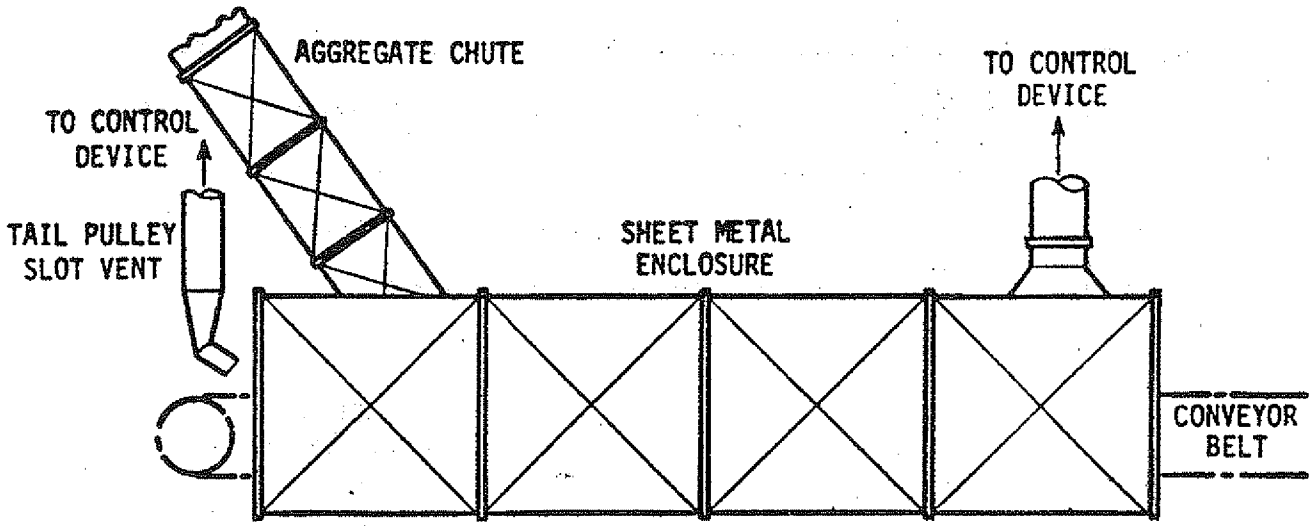

Figure 2.18-19. Hood configuration for a transfer point having a free-fall distance greater than 3 feet.[49]

In instances where water availability is not a problem and where fine-sized products that aggomerlate are being produced (crushing and screeningoperations on 1/4 inch particles) a combination system consisting of wet suppression and fabric filtration is often used. In such systems (see Figure 2.18-20), wet suppression is generally used at the primary processing portions of the process, i.e., the primary crushing and screening operations, reclaim feeders and conveyor transfer points. The processing operations following these activities, such as secondary and tertiary crushers, screens and recirculating conveyors, are controlled by a baghouse collector. The combination systems generally have higher annualized costs than a full wet suppression system, but less than a complete dry system assuming water is readily

available. If water must be transported into a plant via truck, the added cost of hauling must be considered. In a combination system, since the wet suppression system is only used at a portion of the plant, the water use will be only about 40 percent of the use for a total wet suppression system.[50]

Therefore, the combination system represents a practical alternative to a fully dry collection system due to 1) less capital cost, 2) less water usage, and 3) the elimination of screen clogging when finer material is being processed.[50]

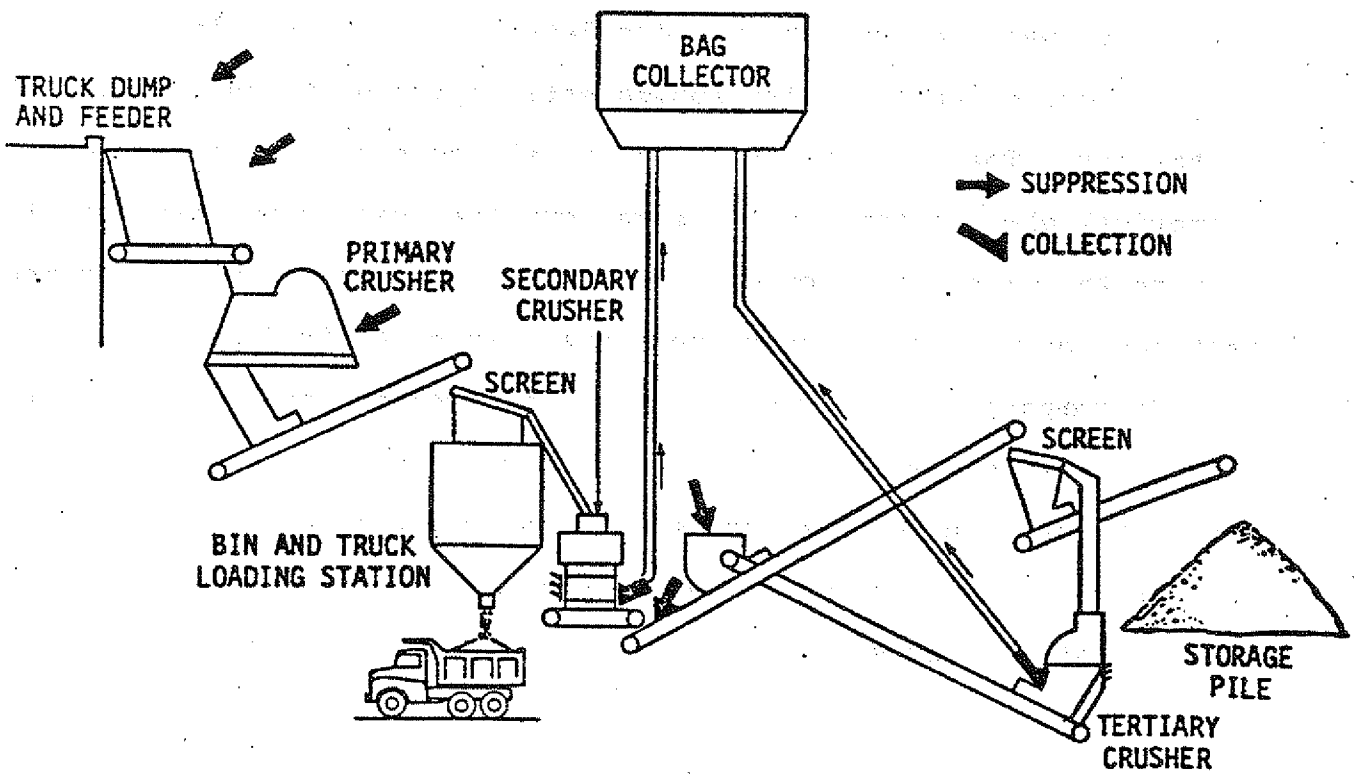

Figure 2.18-20. A combination control system consisting of wet suppression and dry collection.

Another dust control technique for aggregate processing activities which has been recently developed is electrostatic spray systems. Very little data is available on their actual performance. In fact, one source indicated that there is no known electrostatic spray system that has been demonstrated to be effective in an outside environment at an aggregate processing plant. The most promising feature of this control measure is that it shows promise for use in applications where very fine dusts are emitted and where use of water, as in wet dust suppression systems, is technically infeasible. According to the limited knowledge of the principles behind this new technique, in general, particles below 8 microns in diameter tend to be negatively charged while larger particles tend to have positive charges or to be uncharged. This technique uses an appropriately charged water fog to attract the oppositely charged particulates. Contact is made between the fog droplets and the particulates.

The wetted particulates subsequently agglomerate and settle out of the air. The equipment used may merely consist of a modified commerical electrostatic paint spray gun that uses compressed air to atomize the water into fog droplets. The fog droplets may be formed uncharged or with positive or negative charges as is desired.[51]

In comparison to a comparable wet suppression system using 450 gallons of water per hour for a plant production rate of 300 tons per hour, the water usage rate for an electrostatic spray system is 9.5 gallons/hr. Thus, the water usage is drastically reduced with an electrostatic spray system.[52]

Therefore, electrostatic spray systems should be considered for further experimentation on small (< 10 microns) dust particles generated, for example, by tertiary crushing where wet suppression techniques cannot be used due to product specifications or moisture content. Also, it could be used in advance of a control device such as a wet scrubber in order to improve efficiency and reduce energy requirements.[52]

Fugitive dust emissions may be significant from conveyor and transfer points. The control alternatives for conveyor emissions include wet suppression and enclosure of the conveyor.

Fugitive dust emissions from aggregate storage piles originate from four sources: 1) loading onto pile, 2) loading out, 3) wind erosion and 4) vehicular traffic.

For fugitive dust emissions from loading onto storage piles from belt conveyors, wet suppression and minimizing the free-fall distance are effective methods of control. For loading onto finished product storage piles, the use of wet suppression sprays at the conveyor drop points may not be necessary if sufficient dust suppressant has been applied in the previous stages of processing. However, if excessive visible emissions are noted during loading onto storage piles, the source may be controlled by either increasing the application rate of dust suppressant at the prior application points, or by installing a separate spray system at the conveyor drop point.

Minimizing free-fall distances from loading onto piles may be accomplished through the use of stone ladders, telescopic chutes and hinged-boom stacker conveyors.

Loading out from storage piles also may create fugitive dust emissions. Generally, loading out at aggregate processing plants is performed by the use of a front-end loader or by an under pile, gravity-feed conveyor system (usually for surge storage piles only). Control methods for this fugitive dust source may consist of wet suppression, which keeps the stored material wet, and the use of an under pile, gravity-feed conveyor system (in place of loading with a front-end loader).

For control of fugitive dust emissions due to wind erosion of storage piles, wet suppression, watering, and enclosure of the pile are the generally available control options. For very inactive storage piles, surface crusting agents may be sprayed over the entire surface of the pile. Also, the location of storage piles behind natural or manufactured windbreaks, and maintaining the working area on the leeward side of the storage piles can help to further reduce fugitive dust emissions.[53]

The control methods for fugitive emissions due to vehicular traffic around storage piles are presented in Section 2.1.1.

Fugitive dust emissions from product loading by front-end loaders into trucks may be controlled by keeping the stored material as moist as possible so that emissions are minimized. Furthermore, the use of operating precautions, such as emptying the loaded bucket as close to the bed of the truck as possible, will help minimize emissions.[54]

For produce loading by gravity free fall from storage bins into open bed trucks, the loading area may be partially enclosed or partially enclosed and exhausted to a fabric filter. The use of telescopic chutes at the loadout is also an effective control method.

2.18.5 Recommended Reasonably Available Control Measures (RACM)

The RACM selections for aggregate processing plant, fugitive dust emission sources are presented in Table 2.18-2.

For the unloading of raw material (usually by truck), the selected RACM is the use of a wet suppression system (spray application at the transfer point where the material falls off the truck). This system, when used for control on other sources at an aggregate processing plant, provides effective control at a relatively low annual cost. Of course, for operations such as the unloading of wet sand and gravel, no control is acceptable if visible emissions during unloading are negligible.

Similarly, wet suppression is selected as the RACM for all crushing, screening, conveying and handling operations. This selection is based on the low cost to benefit ratio for wet suppression as compared to the more costly alternative of enclosure with ventilation to a fabric filter. For those facilities which are not able to totally employ a wet suppression system for these operations because of problems with screen clogging, inability to achieve product specifications due to excessive fines in the material, and/or infeasibility (e.g., no water can be used in processing of agricultural lime due to the fine particle sizes), then a combination system should be used. The combination system may consist of wet suppression with either 1) enclosure with ventilation to a fabric filter, 2) electrostatic spray systems or 3) foaming agent spray systems.

Wet suppression was also selected as RACM for loading, loading out and wind erosion from storage piles. If an adequate dust suppressant has been applied in prior processing stages, separate spray application points at the storage pile may not be necessary.

TABLE 2.18-2. A SUMMARY OF THE CONTROL ALTERNATIVES, EFFICIENCIES AND COSTS, AND THE RACM SELECTIONS FOR FUGITIVE DUST EMISSIONS FROM AGGREGATE PROCESSING PLANTS

Fugitive dust sources	Control alternatives	Control efficiency, %	Control costs, Jan. 1980 $		Cost benefit, $/lb			RACM selection
			Capital	Annualized	Stone	Sand	Slag	
(1) Raw material unloading (trucks)	Enclosure, vent to fabric filter	99[a]	87,400[b]	13,500[c]	0.85	2.27	2.13	Wet suppression (chemical)
	Enclosure	70[d]	11,000[e]	1,900[f]	0.17	0.45	0.42	
	Wet suppression (chemical)	90[g]	72,000[h]	26,000[h]	0.008	0.18	0.04	
	Water sprays	50[i]	NA	NA	-	-	-	
(2) Primary crushing and screening	Enclosure, vent to fabric filter	99[a]	154,000[j]	53,000[j]	0.01	0.45	0.07	Wet suppression (chemical)
	Wet suppression (chemical)	90[g]	h	h	0.008	0.18	0.04	
	Water sprays	70[a]	NA	NA	-	-	-	
(3) Secondary crushing and screening	Enclosure, vent to fabric filter	99[a]	j	j	0.01	0.45	0.07	Wet suppression (chemical)
	Wet suppression (chemical)	90[g]	h	h	0.008	0.18	0.04	
(4) Tertiary crushing and screening	Enclosure, vent to fabric filter	99[a]	j	j	0.01	-	-	Wet suppression (chemical)
	Wet suppression (chemical)	90[g]	h	h	0.008	-	-	
(5) Recrushing and rescreening	Enclosure, vent to fabric filter	99[a]	j	j	0.01	-	-	Wet suppression (chemical)
	Wet suppression (chemical)	90[g]	h	h	0.008	-	-	
(6) Screening, conveying and handling	Enclosure, vent to fabric filter	99[a]	j	j	0.01	0.45	0.07	Wet suppression (chemical)
	Wet suppression (chemical)	90[g]	h	h	0.008	0.18	0.04	

(continued)

TABLE 2.18-2 (continued)

Fugitive dust sources	Control alternatives	Control efficiency, %	Control costs, Jan. 1980 $		Cost benefit, $/lb			RACM selection
			Capital	Annualized	Stone	Sand	Slag	
(7) Storage piles								
Wind erosion	Enclosure	100[k]	3,890,000[k](s) 4,550,000(sg) 6,090,000(cs)	661,000[f](s) 747,000(sg) 1,035,000(cs)	134	27	169	Wet suppression (chemical)
	Wet suppression (chemical)	90[g]	h	h	0.008	0.18	0.04	
	Watering	80[k]	13,500[k]	2,700[l]	0.44	0.59	0.68	
	Windbreaks	30[m]	NA	NA	-	-	-	
Loading onto piles	Enclosure (stone ladders)	80[m]	24,500[m]	4,200[f]	9.38	14.58	2.83	Wet suppression (chemical)
	Wet suppression (chemical)	90[g]	h	h	0.008	0.18	0.04	
	Telescopic chutes	75[m]	8,600[h]	1,500[f]	3.57	5.55	1.08	
	Stacker conveyors	25[m]	122,000[m]	21,000[f]	150	233	45.30	
Loading out	Wet suppression (chemical)	90[g]	h	h	0.008	0.18	0.04	Wet suppression (chemical)
	Under pile conveyor	80[n]	NA	NA	-	-	-	
(8) Product loading (truck)								
Front-end loaders	Watering material prior to loading	70[a]	NA	NA	-	-	-	Wet suppression (chemical) and precautions
(coarse aggregate)	Wind breaks	50[m]	NA	NA	-	-	-	
	Precautions (minimize free-fall distance, etc.)	NA	NA	NA	-	-	-	
	Wet suppression (chemical)	90[g]	h	h	0.008	-	-	

(continued)

TABLE 2.18-2 (continued)

Fugitive dust sources	Control alternatives	Control efficiency, %	Control costs, Jan. 1980 $		Cost benefit, $/lb			RACM selection
			Capital	Annualized	Stone	Sand	Slag	
Loading from storage bins (fine aggregate)	Telescopic chutes	75[m]	8,600[m]	1,500[f]	0.13	0.33	0.31	Wet suppression (chemical) and telescopic chutes
	Enclosure of loading area	70[d]	11,000[e]	1,900[f]	0.17	0.45	0.42	
	Enclosure, vent to fabric filter	99[a]	87,400[b]	13,500[c]	0.85	2.27	2.13	
	Wind breaks	50[m]	NA	NA	-	-	-	
	Water sprays	50[l]	NA	NA	-	-	-	
	Wet suppression (chemical)	90[g]	h	h	0.008	-	-	

[a] Engineering estimate.

[b] Based on a 20' x 20' x 15' enclosure and a jet pulse baghouse treating 10,000 acfm @ 70°F with a 6.5 to 1 air/cloth ratio.

[c] Reference 55. Based on 1,000 hrs/yr operation.

[d] Reference 56.

[e] See Section 2.3 for truck unloading.

[f] Includes capital charges only at 17% of capital.

[g] Reference 57.

[h] Reference 58. Based on a 300 tph plant. Includes application at unloading, primary, secondary and tertiary crusher inlets and outlets, conveyor transfer points, storage pile sources, and loading out.

[i] Reference 59.

[j] Reference 60. Based on a 300 tph plant. Includes control of primary, secondary, and tertiary crushers, conveying and transfer.

[k] Reference 61. Based on a wind-activated sprinkler system.

[l] Includes capital charges and maintenance at 20% of capital.

[m] Reference 61.

[n] Reference 62.

Fugitive dust emissions from product loading via front-end loader should be controlled by the use of wet suppression in preceding operations and by precautions such as minimizing the drop distance from the loader bucket to the material surface in the truck. Wet suppression may also be used directly on the material during loading, if necessary, with minimal detriment to product quality (due to agglomeration of fines), since the aggregate that is loaded via front-end loader is coarse material.

For product loading from storage bins, RACM consists of the use of telescopic loading chutes and wet suppression as applied in preceding operations. Generally, the application of a dust suppressant in the previous process operations and the use of telescopic chutes are sufficient to reduce fugitive dust emissions from fine product loading.

REFERENCES FOR SECTION 2.18

1. Ohio Aggregates, Production and Uses. Ohio Aggregates Association. April 1974.

2. 1977 Division of Mines Report. State of Ohio. Department of Industrial Relations. p. 20.

3. Ibid. p. 19.

4. Formica, P.N. Controlled and Uncontrolled Emission Rates and Applicable Limitations For Eighty Processes. TRC-The Research Corporation of New England. Prepared for U.S. Environmental Protection Agency, Office of Air and Waste Management, Office of Air Quality Planning and Standards, Research Triangle Park, North Carolina. Contract No. 68-02-1382. Task No. 12. EPA-450/3-77-016. September 1976. p. VIII-50.

5. Control Techniques for the Crushed and Broken Stone Industry. PEDCo Environmental, Inc. Prepared for U.S. Environmental Protection Agency, Emission Standards and Engineering Division, Research Triangle Park, North Carolina. Contract Nos. 68-01-4147 and 68-02-2603. July 1979. p. 2-2.

6. Ibid. pp. 2-2 and 2-4.

7. Ibid. p. 2-4.

8. Ibid. p. 2-13.

9. Non-Metallic Mineral Processing Plants, Background Information for Proposed Standards. Draft. U.S. Environmental Protection Agency, Office of Air, Noise, and Radiation, Office of Air Quality Planning and Standards, Research Triangle Park, North Carolina. p. 3-26.

10. Op. cit. Reference 5. p. 2-15.

11. Ibid. pp. 2-19 and 2-22.

12. Op. cit. Reference 9. p. 3-29.

13. Op. cit. Reference 5. pp. 2-25 and 2-28.

14. Op. cit. Reference 9. p. 3-31.

15. Op. cit. Reference 5. p. 2-28.

16. Op. cit. Reference 9. p. 3-33.

17. Op. cit. Reference 5. p. 2-32.

18. Ibid. p. 2-35.

19. Ibid. p. 3-27.

20. Op. cit. Reference 9. p. 3-37.

21. Op. cit. Reference 5. pp. 2-37 and 2-39.

22. Ibid. p. 2-39.

23. Ibid. p. 2-40.

24. Ibid. p. 2-41.

25. Ibid. pp. 2-41 and 2-43.

26. Op. cit. Reference 9. p. 3-40.

27. Op. cit. Reference 5. p. 2-43.

28. Op. cit. Reference 9. p. 3-42.

29. Op. cit. Reference 5. p. 2-45.

30. Ibid. p. 2-6.

31. Ibid. pp. 2-6 and 2-7.

32. Ibid. p. 2-7.

33. Jutze, G., K. Axetell, and R. Amick. Evaluation of Fugitive Dust Emissions from Mining. PEDCo Environmental, Inc. Prepared for U.S. Environmental Protection Agency, Industrial Environmental Research Laboratory, Office of Research and Development, Cincinnati, Ohio. Contract Nos. 68-02-1321, Task No. 36, EPA-600/9-76-001. June 1976. p. 38.

34. Compilation of Air Pollutant Emission Factors, 2nd Edition. U.S. Environmental Protection Agency, AP-42, February 1976. p. 8.19-1.

35. Ibid. p. 8.20-1.

36. Technical Guidance for Control of Industrial Process Fugitive Particulate Emissions. PEDCo Environmental, Inc. Prepared for U.S. Environmental Protection Agency, Office of Air and Waste Management, Office of Air Quality Planning and Standards, Research Triangle Park, North Carolina. Control No. 68-02-1375, Task No. 33, Project No. 3155-GG. March 1977. p. 2-7.

37. Reasonably Available Control Measures for Fugitive Dust Sources, Ohio EPA, September 1980. p. 2-39.

38. A Study of Fugitive Emissions from Metallurgical Processes. Midwest Research Institute. Control No. 68-02-2120. Monthly Progress Report No. 8. Kansas City, Missouri. May 1, 1971.

39. Particulate Pollutant System Study. Volume III-Handbook of Emissions Properties. Midwest Research Institute. Contract No. EPA 22-59-104. Kansas City, Missouri. May 1, 1971.

40. Shannon, L.J., P.G. Gorman, and M. Reichel, Particulate Pollutant System Study, Volume II - Fine Particulate Emissions. Midwest Research Institute. Prepared for U.S. Environmental Protection Agency, Air Pollution Control Office. Contract No. 22-69-104. Chapel Hill, North Carolina. August 1, 1971.

41. Threshold Limit Values for Chemical Substances and Physical Agents in the Workroom Environment with Intended Changes for 1973. American Conference of Governmental Industrial Hygienists. Cincinnati, Ohio 1973. p. 53.

42. Control of Air Emissions form Process Operations in the Rock Crushing Industry. JACA Corp. Prepared for U.S. Environmental Protection Agency, Division of Stationary Source Enforcement, Washington, D.C. Contract No. 68-01-4135, Task No. 19, EPA-340/1-79-002. February 1979. p. iii.

43. Ibid. pp. 15-19.

44. Ibid. p. 17.

45. Op. cit. Reference 5. p. 3-13.

46. Ibid. p. 3-14.

47. Cole, H.W. "Foam suppressants for control of dust", Coal Mining & Processing. Date unknown. pp. 98-104.

48. Op. cit. Reference 5. p. 3-18.

49. Ibid. p. 3-19.

50. Op. cit. Reference 42. pp. 52 and 53.

51. Ibid. pp. 53 and 58.

52. Ibid. p. 62.

53. Op. cit. Reference 5. p. 3-27.

54. Ibid. pp. 3-28 and 3-29.

55. Non-Metallic Mineral Industries Control Equipment Costs. Industrial Gas Cleaning Institute. Prepared for U.S. Environmental Protection Agency, Strategies and Air Standards Division, Economic Analysis Branch, Research Triangle Park, North Carolina. Contract No. 68-02-1473, Task No. 19. February 1977.

56. Bohn, R., T. Cuscino Jr., and C. Cowherd Jr. Fugitive Emissions from Integrated Iron and Steel Plants. Midwest Research Institute. Prepared for U.S. Environmental Protection Agency, Office of Research and Development, Washington, D.C. Contract No. 68-02-2120. EPA-600/2-78-050. March 1978. p. 6-2.

57. Chem-Jet Dust Suppression System, Johnson - March Corporation, 1971, p. 6.

58. Op. cit. Reference 42. p. 33.

59. Op. cit. Reference 36. p. 2-245.

60. Op. cit. Reference 42. p. 45.

61. Op. cit. Reference 56. p. 6-6.

62. Op. cit. Reference 36. p. 2-39.

APPENDIX FOR SECTION 2.18

Assume a typical plant for each aggregate type:

	tph	tpy	hrs/yr	tons stored
Crushed stone	300	400,000	1,300	83,000
Sand & gravel	300	300,000	1,000	62,000
Slag	300	320,000	1,100	53,000

Wet Suppression System for Control of all Sources:

Capital cost (1977 $) = $58,643 p. 33, JACA

$$\$58{,}643 \left(\frac{249.6}{204.1}\right) \approx \$72{,}000$$

Annualized cost (1977 $) = $21,493

$$\$21{,}493 \left(\frac{249.6}{204.1}\right) \approx \$26{,}000$$

$$C/B_{cs} = \frac{\$26{,}000/\text{yr}}{(.9)(400{,}000\ \text{tpy})(0.04 + 0.5 + 1.5 + 6.0 + 1.0 + 0.0014 + 0.0029 + 0.04) + (.9)(83{,}000)(2.0 + 0.093)}$$

C/B_{cs} = $0.008 or ∿ $0.01/lb TSP removed

$$C/B_{sg} = \frac{\$26{,}000/\text{yr}}{(.9)(300{,}000\ \text{tpy})(0.02 + 0.1 + 0.3 + 0.0012 + 0.0023 + 0.02) + (.9)(62{,}000)(0.47)}$$

= $0.18/lb TSP removed

$$C/B_{s} = \frac{\$26{,}000/\text{yr}}{(.9)(320{,}000\ \text{tpy})(0.02 + 0.5 + 1.5 + 0.0058 + 0.012 + 0.02) + (.9)(53{,}000)(2.0 + 0.074)}$$

= $0.0376 ≈ $0.04/lb TSP removed

Fabric Filter System for Control of Sources ②, ③, ④, ⑤, and ⑥:

Capital cost (1977 $) = $125,922 p. 45, JACA

$$\$125{,}922 \left(\frac{249.6}{204.1}\right) = \$154{,}000$$

Annualized cost (1977 $) = $43,412

$$\$43{,}412 \left(\frac{249.6}{204.1}\right) = \$53{,}000$$

$$C/B_{cs} = \frac{\$53,000/yr}{(0.99)(400,000\ tpy)(0.5 + 1.5 + 6.0 + 1.0) + (.099)(83,000)(2.0)}$$

= \$0.01/lb TSP removed

$$C/B_{sg} = \frac{\$53,000/yr}{(0.99)(300,000\ tpy)(0.1 + 0.3)}$$

= \$0.45/lb TSP removed

$$C/B_{s} = \frac{\$53,000/yr}{(.99)(320,000\ tpy)(0.5 + 1.5) + (.99)(53,000)(2.0)}$$

= \$0.07/lb TSP removed

Raw Material Unloading Via Truck:

A. Enclosure, vent to fabric filter

Capital cost = \$87,400 (See Section 2.3, Lime)

Annual cost (1977 \$) = \$11,000 NMI, p. 3-5, @ 1,000 h/y

$$\$11,000 \quad \frac{(249.6)}{(240.1)} \simeq \$13,500$$

$$C/B_{cs} = \frac{\$13,500/yr}{(0.99)(400,000\ tpy)(0.04)}$$

= \$0.85/lb TSP removed

$$C/B_{sg} = \frac{\$13,500/yr}{(0.99)(300,000\ tpy)(0.02)}$$

= \$2.27/lb TSP removed

$$C/B_{s} = \frac{\$13,500/yr}{(0.99)(320,000\ tpy)(0.02)}$$

= \$2.13/lb TSP removed

B. Enclosure

Capital cost = \$11,000 (See Section 2.19, Truck Unloading)

Annual cost = \$1,900

Control efficiency = 70%

$$C/B_{cs} = \frac{\$1,900/yr}{(0.70)(400,000\ tpy)(0.04)}$$

$$= \$0.17/lb\ TSP\ removed$$

$$C/B_{sg} = \frac{\$1,900/yr}{(0.70)(300,000\ tpy)(0.02)}$$

$$= \$0.45/lb\ TSP\ removed$$

$$C/B_{s} = \frac{\$1,900/yr}{(0.70)(320,000\ tpy)(0.02)}$$

$$= \$0.42/lb\ TSP\ removed$$

Storage Piles:

A. Wind erosion

1. Enclosure

Control efficiency = 100% MRI, p. 6-6

Capital cost (1977 $) =

($60/ton stored)	(53,000 tons)	=	$3,180,000
"	(62,000 tons)	=	3,720,000
"	(83,000 tons)	=	4,980,000

	(249.6) / (204.1)		
$3,180,000		=	$3,890,000
3,720,000	(")	=	4,550,000
4,980,000	(")	=	6,090,000

Annualized cost (@17%)

$3,890,000	(.17)	=	$661,000
4,550,000	(.17)	=	774,000
6,090,000	(.17)	=	1,035,000

$$C/B_{cs} = \frac{\$1,035,000/yr}{(.093)(83,000\ tons)}$$

$$= \$134/lb\ TSP\ removed$$

$$C/B_{sg} = \frac{\$774,000/yr}{(.47)(62,000\ tons)}$$

$$= \$27/lb\ TSP\ removed$$

$$C/B_{s} = \frac{\$661,000}{(.074)(53,000\ tons)}$$

$$= \$169/lb\ TSP\ removed$$

2. Watering (wind activated sprinkler system)

Control efficiency = 80%

Capital cost (1977 $) = $11,000

$$\$11{,}000 \quad \frac{(249.6)}{(204.1)} = \$13{,}500$$

Annual cost (@ 20%)

$13,500 (.2) = $2,700

$$C/B_{cs} = \frac{\$2{,}700/yr}{(.8)(.093)(83{,}000)}$$

= $0.44/lb TSP removed

$$C/B_{sg} = \frac{\$2{,}700/yr}{(.8)(.093)(62{,}000)}$$

= $0.59/lb TSP removed

$$C/B_{s} = \frac{\$2{,}700/yr}{(0.8)(0.093)(53{,}000)}$$

= $0.68/lb TSP removed

B. Loading onto piles

1. Enclosure (stone ladder)

Control efficiency = 80% MRI, p. 6-6

Capital cost (1977 $) = $20,000

$$\$20{,}000 \quad \frac{(249.6)}{(204.1)} = \$24{,}500$$

Annual cost (@ 17%)

$24,500 (0.17) = $4,200

$$C/B_{cs} = \frac{\$4{,}200/yr}{(0.8)(0.0014)(400{,}000\ tpy)}$$

= $9.38

$$C/B_{sg} = \frac{\$4{,}200/yr}{(0.8)(0.0012)(300{,}000\ tpy)}$$

= $14.58

$$C/B_{s} = \frac{\$4{,}200/yr}{(0.8)(0.0058)(320{,}000\ tpy)}$$

= $2.83

2. Telescopic chutes

Control efficiency = 75% MRI, p. 6-6

Capital cost (1977 $) = $7,000

$$\$7,000 \frac{(249.6)}{(204.1)} = \$8,600$$

Annual cost (@ 17%)

$$\$8,600\ (.17) = \$1,500$$

$$C/B_{cs} = \frac{\$1,500/yr}{(.75)(.0014)(400,000\ tpy)}$$

$$= \$3.57/lb\ TSP\ removed$$

$$C/B_{sg} = \frac{\$1,500/yr}{(.75)(.0012)(300,000\ tpy)}$$

$$= \$5.55/lb\ TSP\ removed$$

$$C/B_{s} = \frac{\$1,500/yr}{(.75)(.0058)(320,000\ tpy)}$$

$$= \$1.08/lb\ TSP\ removed$$

3. Stacker conveyor (stationary stacker)

Control efficiency = 25% MRI, p. 6-6

Capital cost (1977 $) = $100,000

$$\$100,000 \frac{(249.6)}{(204.1)} = \$122,000$$

Annual cost (@ 17%)

$$\$122,000\ (.17) = \$21,000$$

$$C/B_{cs} = \frac{\$21,000/yr}{(.25)(.0014)(400,000\ tpy)}$$

$$= \$150/lb\ TSP\ removed$$

$$C/B_{sg} = \frac{\$21,000/yr}{(.25)(.0012)(300,000\ tpy)}$$

$$= \$233/lb\ TSP\ removed$$

$$C/B_{s} = \frac{\$21,000/yr}{(.25)(.0058)(320,000\ tpy)}$$

$$= \$45.30/lb\ TSP\ removed$$

Product Loading:

A. Loading from storage bins

1. Telescopic chutes

Control efficiency = 75% MRI, p. 6-6

Capital cost = $8,600

Annual cost = $1,500

$$C/B_{cs} = \frac{\$1,500/yr}{(.75)(.04)(400,000)}$$

$$= \$0.13/lb \text{ TSP removed}$$

$$C/B_{sg} = \frac{\$1,500/yr}{(.75)(.02)(300,000)}$$

$$= \$0.33/lb \text{ TSP removed}$$

$$C/B_{s} = \frac{\$1,500/yr}{(.75)(.02)(320,000)}$$

$$= \$0.31/lb \text{ TSP removed}$$

2. Enclosure of loading area

Assume same as truck unloading

3. Enclosure, vent to fabric filter

Assume same as truck unloading

2.19 COAL PROCESSING PLANTS

2.19.1 Process Description

This section presents a study of the fugitive dust emissions from sources at coal processing plants. For purposes of this study, the term "coal processing plants" includes all coal preparation plants and coal handling facilities.

Coal preparation plants include any facility (excluding underground mining operations) which prepares coal by one or more of the following processes: breaking, crushing, screening, wet or dry cleaning, and thermal drying. Generally, coal preparation plants can be classified into three types:

(1) those performing complete preparation, i.e., cleaning of both coarse and fine coal;

(2) those performing partial preparation, i.e., cleaning only coarse coal; and

(3) those performing only crushing of coal to a specific size.[1]

Coal handling facilities include any facility (excluding those associated with mining) which processes coal solely by use of one or more of the following operations: transferring, conveying, loading, unloading, or storing.

The subject of fugitive dust emissions from coal mining operations is not discussed in this section. For information on this subject, the reader should refer to Section 2.1.4 where an analysis of fugitive dust emissions from 1) overburden removal, 2) drilling and blasting, 3) off-highway truck loading, 4) waste disposal, and 5) reclamation is provided.

Generally, all coal mining operations have either a preparation or handling facility for the processing of the mined coal (commonly known as run-of-mine or ROM coal). These facilities are usually located at permanent sites near the mining operation in order to minimize transportation costs; however, some processing plants (generally small operations) have portable equipment and move with the mining location.

Coal processing plants can vary in size, complexity and purpose. For example, the type of coal processing plant can range from a simple coal loading station (tipple) which handles only a few tons of coal per hour to a complex coal washing plant processing over 1,000 tons of coal per hour. The type of coal processing performed depends on the requirements of the end user. Figure 2.19-1 illustrates the various types of coal processing plants that can be encountered.

As shown in Figure 2.19-1, this study of fugitive dust emissions from coal processing plants begins at the point where ROM coal is brought to the processing plant via some mode of transportation (truck, rail car, conveyor) and is unloaded. The study concludes at the point where the processed coal is loaded into transportation equipment (truck, rail car, conveyor, barge) for shipment to the end user.

At most surface coal mines in Ohio, ROM coal is usually loaded into off-highway trucks and/or rail cars and then transported to a central processing plant or transfer area. At underground coal mines in Ohio, if the processing plant is located near the mine mouth, the ROM coal is usually delivered directly from the mine to the processing plant or transfer area via rail cars or belt conveyors. If the processing plant is located a great distance from the underground coal mine mouth, the ROM coal is usually delivered by overland conveyors or by rail cars.

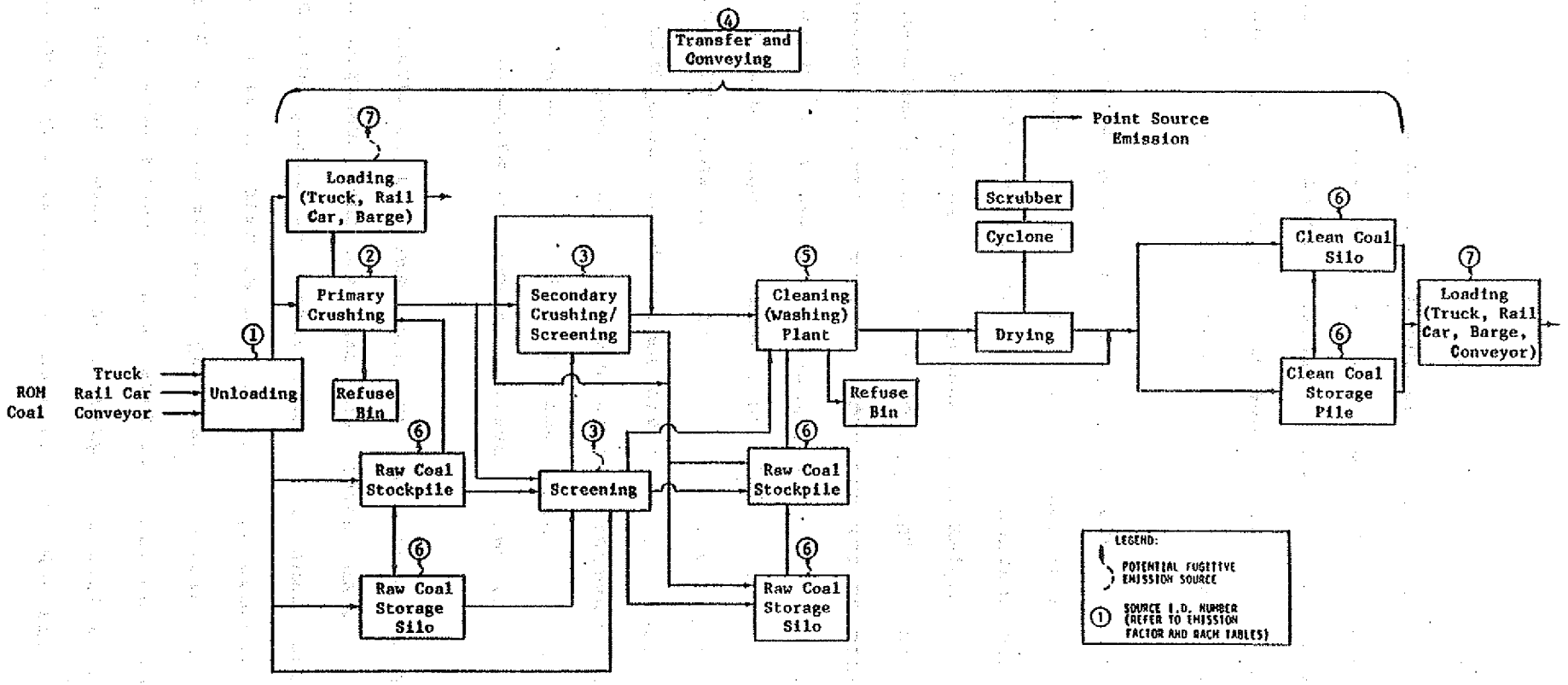

Figure 2.19-1 Simplified process flow diagram for coal processing plants and associated fugitive particulate emission sources.

At the processing plant, the ROM coal is unloaded from trucks or rail cars by dumping into a receiving hopper which discharges to a primary crusher, a tipple or to a feeder. A feeder subsequently empties onto a conveyor for transfer to an open storage pile or enclosed silo. ROM coal that is carried directly to the processing plant by conveyors is unloaded by dropping onto open storage piles or into enclosed silos.

Coal is normally stored in either open storage piles or silos to allow for optimum scheduling of processing and transportation equipment. The coal is transferred from open storage piles to either crushing, screening or loading operations by either front-end loaders or self-feeding tunnel conveyors. The coal which is stored in silos is transferred to processing equipment through the use of belt conveyors or is loaded into trucks or railroad cars by gravity.

Belt conveyors which have large carrying capacities are the most common method of transporting material at a coal processing plant. This is due to the large amount of material which must be transported. Therefore, screw, vibrating or continuous-flow conveyors are seldom used.[2]

ROM coal at any preparation plant undergoes at least a crushing operation. At many smaller plants, the coal that is processed by crusher is loaded directly into either a truck, rail car or barge for shipment to the user. Most of the larger mining operations will also provide secondary crushing, screening, wet or dry cleaning, and drying of the crushed coal. The remainder of this process description will discuss such processing at a typical coal preparation plant.

The cleaning or beneficiation of coal at preparation plants is performed for a number of reasons. One such reason is to improve the coal quality.

The quality of coal is improved through cleaning by the removal of undesirable impurities. This increases the heating value of the coal and provides a better fuel for the user. In fact, coal cleaning is often necessary in order to market ROM coal, since mined coal may contain up to 60 percent of reject material.[3]

Another reason for the cleaning of coal is that air pollution control requirements on the user often dictate the partial removal of pyrites with the ash in order to reduce the sulfur content of the coal. Also, ash content must often be monitored and reduced to levels stipulated in sales contracts. However, a minimum ash content must be maintained in order to ensure optimum combustion characteristics.[4]

Lastly, substantial savings in freight costs for shipping coal may be achieved by the removal of impurities before loading. Also, it is much easier to dispose of the impurities at the mining site rather than at the burning site because the burning site is generally located in a populated urban area.[4]

Whatever the reason for coal cleaning, a significant amount of coal mined in Ohio is washed. In 1977, approximately 37 percent (17.4 million tons) of all coal mined in Ohio was washed at a preparation plant. About 87 percent of this coal originated from underground mining operations, while the remainder came from surface mines.[5]

At coal preparation plants, the initial process operations consist of "tramp iron" removal and size reduction.[6] These removal and size reduction operations, which precede coal cleaning, are shown in Figure 2.19-2, where a typical coal preparation plant is illustrated.[7]

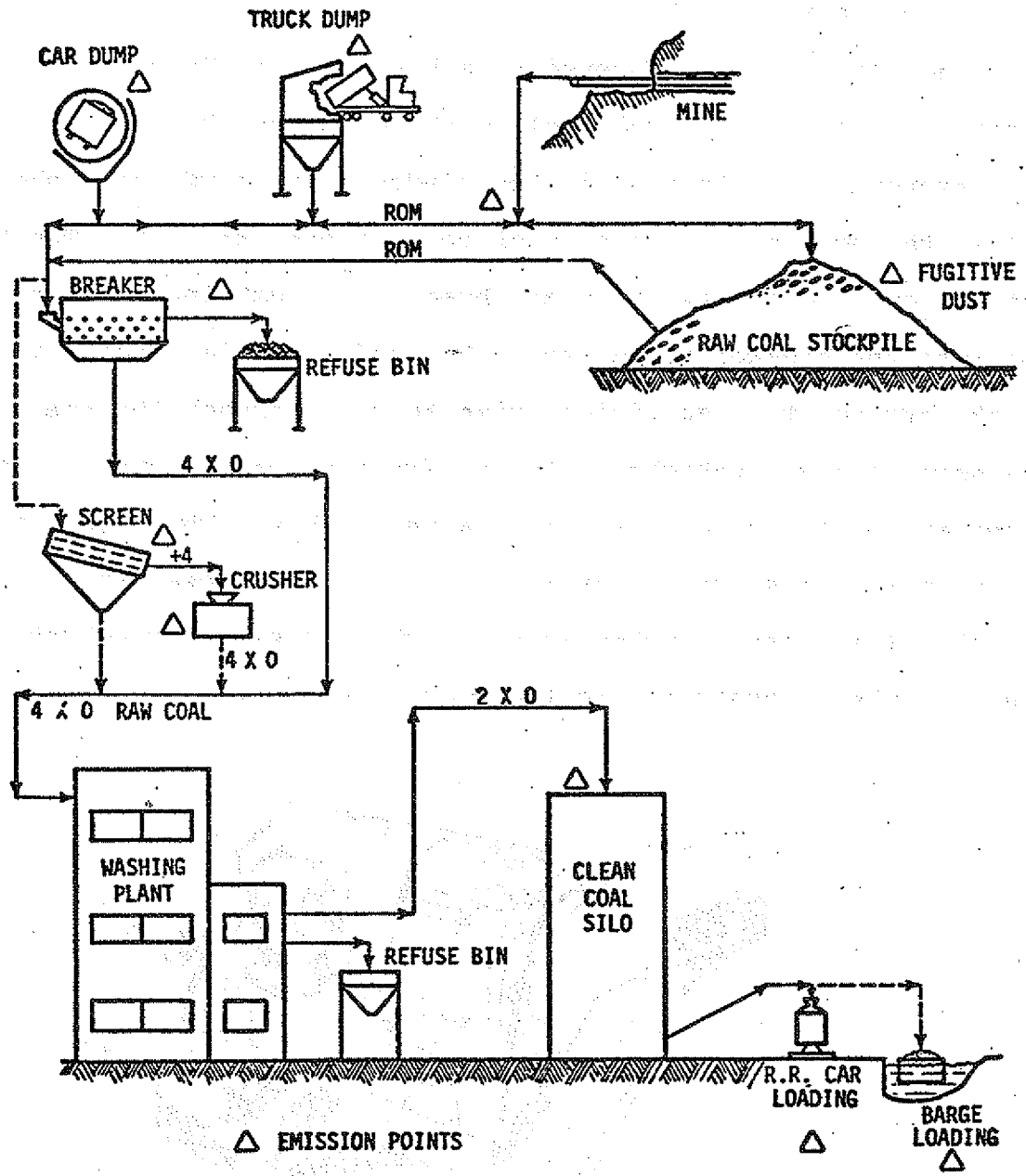

Figure 2.19-2. A coal sizing circuit at a coal preparation plant.[7]

The ROM coal is first exposed to a high-intensity magnet, which is usually suspended over the incoming belt conveyor, and the iron impurities are extracted from the coal. This high-intensity magnet may also be located after the breaker, but it is always located prior to the screen and crusher.

The coal is next conveyed to a breaker (see Figure 2.19-3) which consists of a cyclindrical shell with perforated holes (2 to 8 inches in diameter) and interior lifting blades. The perforated shell allows the smaller size ranges of coal to pass through. The breaker rotates on a horizontal axis and breaks the tumbling coal which is fed into the breaker at one end. The soft material (coal) is broken in the breaker to a sufficient size to pass through the shell, while the hard, larger, unbroken material (reject) passes out through the other end of the breaker and into a refuse bin. The reject material is eventually disposed by hauling to a waste disposal area. The coal (usually less than 4 inches in size) which passes through the breaker shell is then transferred to the cleaning plant.[6]

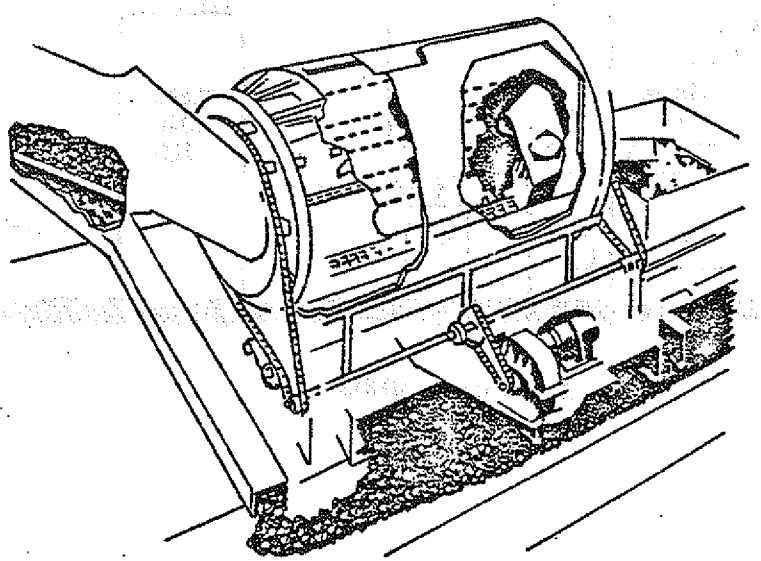

Figure 2.19-3. Rotary breaker.[8]

Instead of entering the breaker, some ROM coal is diverted to a scalping screen. From the scalping screen, the oversized material (> 4 inches) falls into a crusher and is reduced in size to less than 4 inches. This material is then combined with the screenings from the scalping screen and is transferred to the cleaning plant. This alternative flow is used more often than the breaker circuit despite the disadvantage of exposing the crusher to large pieces of material. A heavy-duty single roll crusher with tramp iron protection is most often used for this process.[9]

There are a number of crushers which may be used for crushing at a coal preparation plant. The most common types used are the hammermill, and the single, double-roll and ring crushers. The type to be used is dependent on the size of coal desired. These crushers are illustrated in Figures 2.19-4 through 2.19-7.[10]

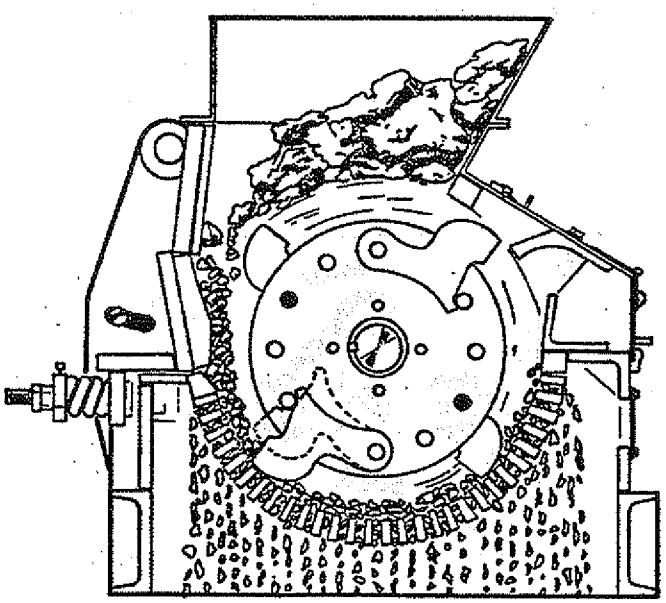

Figure 2.19-4. Hammermill.[8]

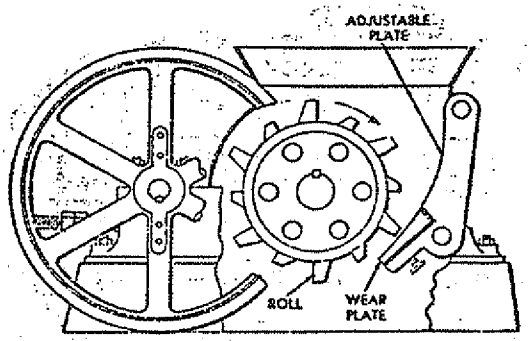

Figure 2.19-5. Single-roll coal crusher.[11]

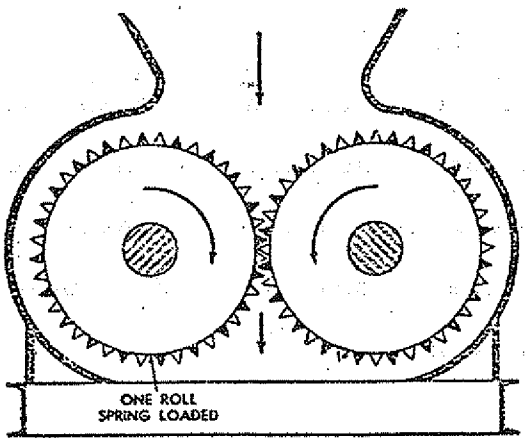

Figure 2.19-6. Double-roll coal crusher.[11]

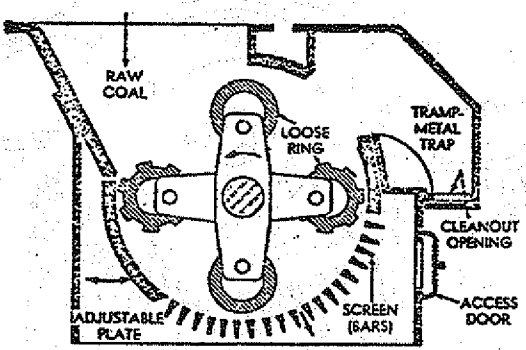

Figure 2.19-7. Ring coal crusher.[12]

As in the case of crushing equipment, coal preparation plants also use a variety of screening equipment for coal sizing. The types generally used are the grizzly, shaker and vibrating screens.

Grizzly screens, which size coal by gravity only, are usually used on ROM coal preceding a crusher or belt conveyor loading operation.[13]

Shaker screens are used infrequently and rarely provide a separation less than 2 inches.[14]

Vibrating screens are the most common type of separating device. They are used in both dry and wet processing plants.[14]

After crushing and screening, the raw coal at a preparation plant is usually stored in an open pile or in a silo prior to washing to allow for the smooth, efficient operation of the cleaning plant.[9]

At the cleaning plant, the type of mechanical cleaning equipment used is dependent on the size range of the coal entering the plant and the desired coal size. For example, coal that is larger than 8 inches is usually crushed; however, if lump coal is desired, the large fraction above 8 inches is cleaned by slate pickers. Table 2.19-1 lists the nominal size ranges and the corresponding cleaning equipment generally used. This cleaning equipment is discussed in the following sections.[21]

Table 2.19-1. COAL SIZE RANGES FOR CLEANING EQUIPMENT[15]

+8 inches	Picking tables
8" x 1/4"	Heavy media bath or drums Jigs
1/4" x 48 mesh	Diester tables Heavy media cyclones Air tables
48 mesh x 0	Froth flotation

Coal of a size range less than 3/8 inches is often cleaned by using pneumatic cleaning devices or air tables. These devices have a perforated bottom plate over which a layer of coal passes. A current of air is passed upward through the bed which removes the finer particles. The fines are eventually removed from the air stream by cyclones and fabric filters. By the time the coal reaches the ends of the air tables, it is separated into layers. The bottom layer contains heavy (high-ash content) material, the center layer is medium-weight coal and bone (high-ash content), and the top layer is coal (low-ash content). The center layer is removed, added to the refuse from the bottom layer and rewashed or included with the coal from the top layer and discharged to storage. Figure 2.19-8 shows a typical pneumatic cleaning circuit; and in Figure 2.19-9, an air table is illustrated.[16]

Generally, air tables are not very efficiency with respect to their ability to remove ash from coal. One source reports that their efficiency of ash removal is limited to 2 to 3 percent.[16]

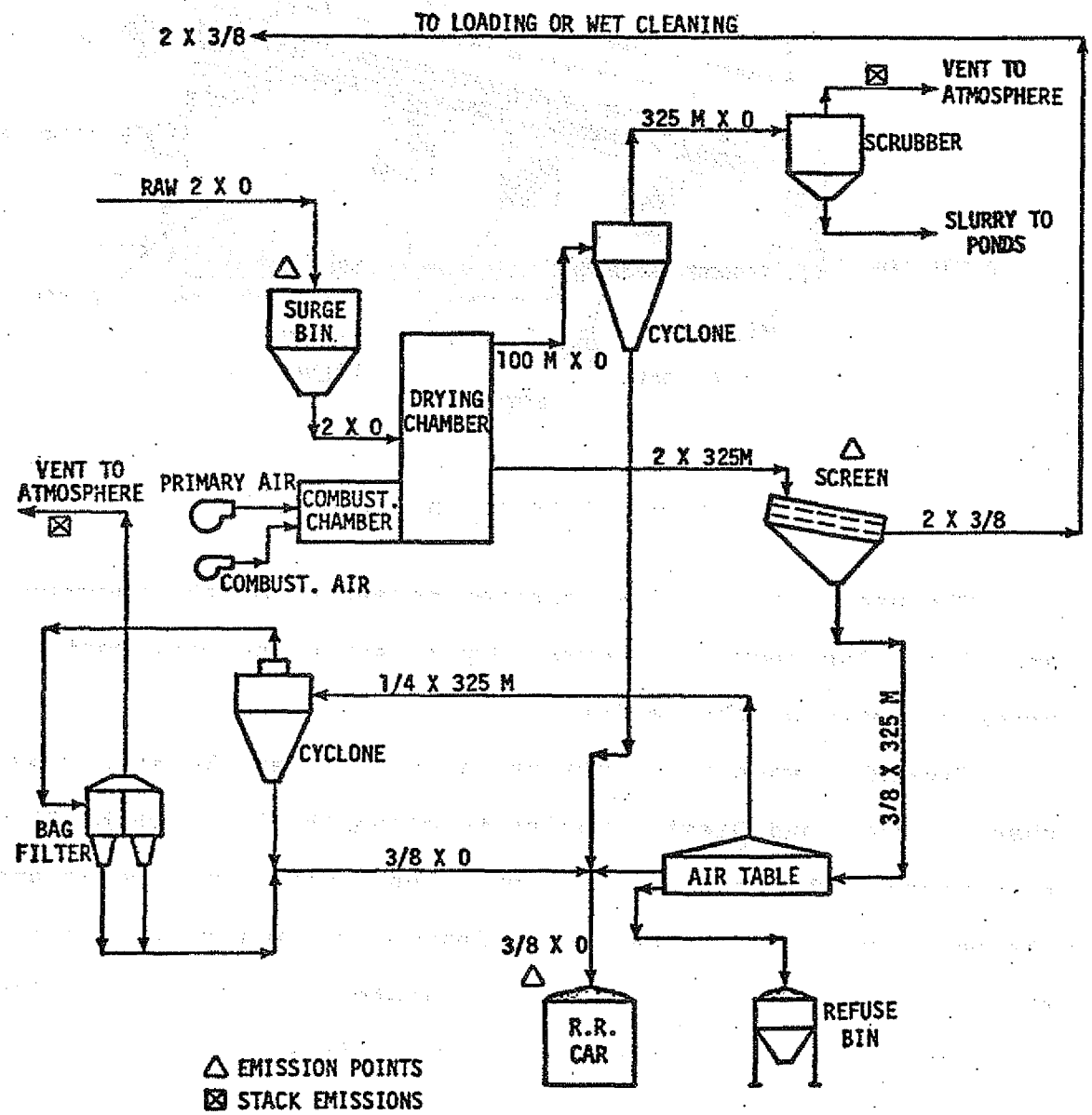

Figure 2.19-8. Pneumatic cleaning circuit.[17]

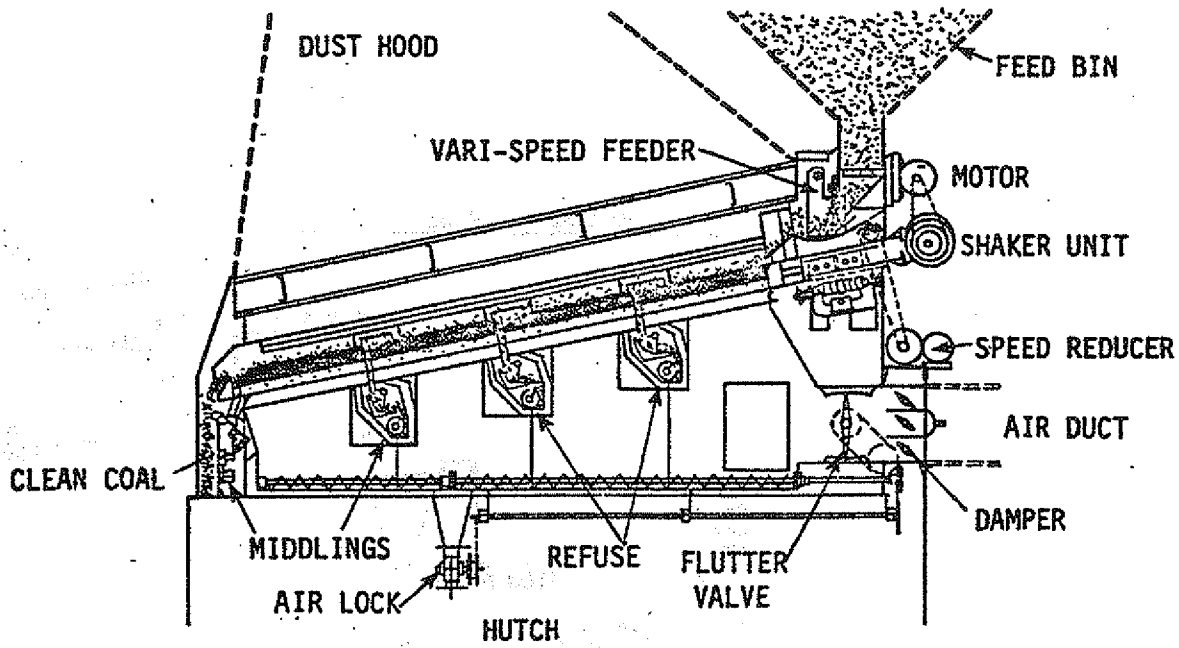

Figure 2.19-9. Air table.[18]

The use of air tables requires screening of the incoming coal, and often also requires thermal drying since the coal must be dry prior to entry on the tables.[16]

Jig-table washing plants use jigs to clean the size range greater than 1/4 inch and Diester tables to clean the 1/4 inch by 28 mesh size range. This equipment is often used with Froth cells and/or thermal dryers. A typical coal cleaning circuit using a jig-table is shown in Figure 2.19-10. The air-pulsated type of jig is illustrated in Figure 2.19-11, and the Diester table is shown in Figure 2.19-12.[19]

In a jig-table wash plant, the raw coal (< 8 mesh) is first separated on a wet screen (usually 1/4 inch mesh). The larger sized coal enters the jig, while the remaining coal is transferred to another separate cleaning circuit. The coal exiting the jig is dewatered on screens and in centrifuges, crushed, and loaded or stored.

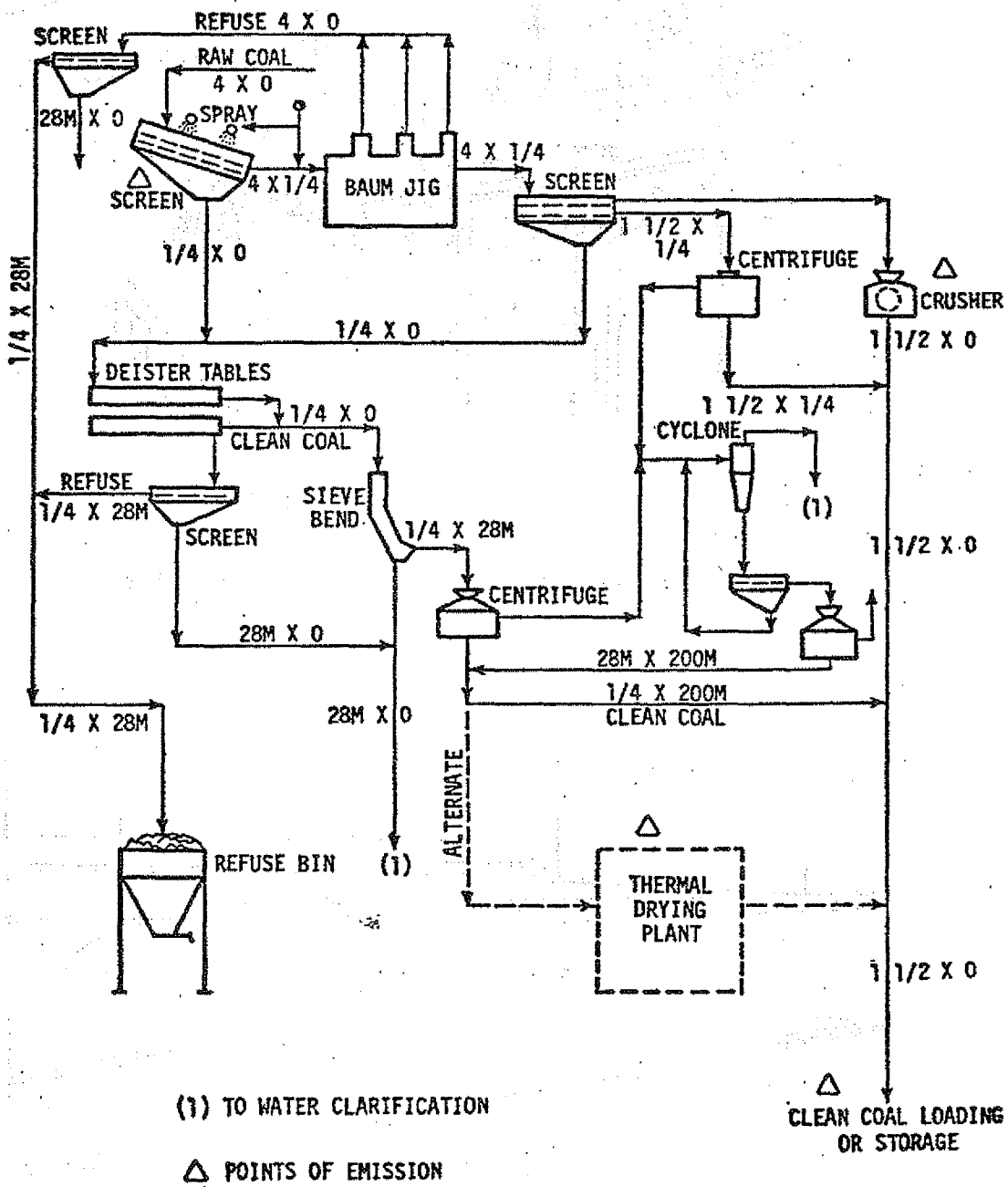

Figure 2.19-10. Jig-table cleaning circuit.[20]

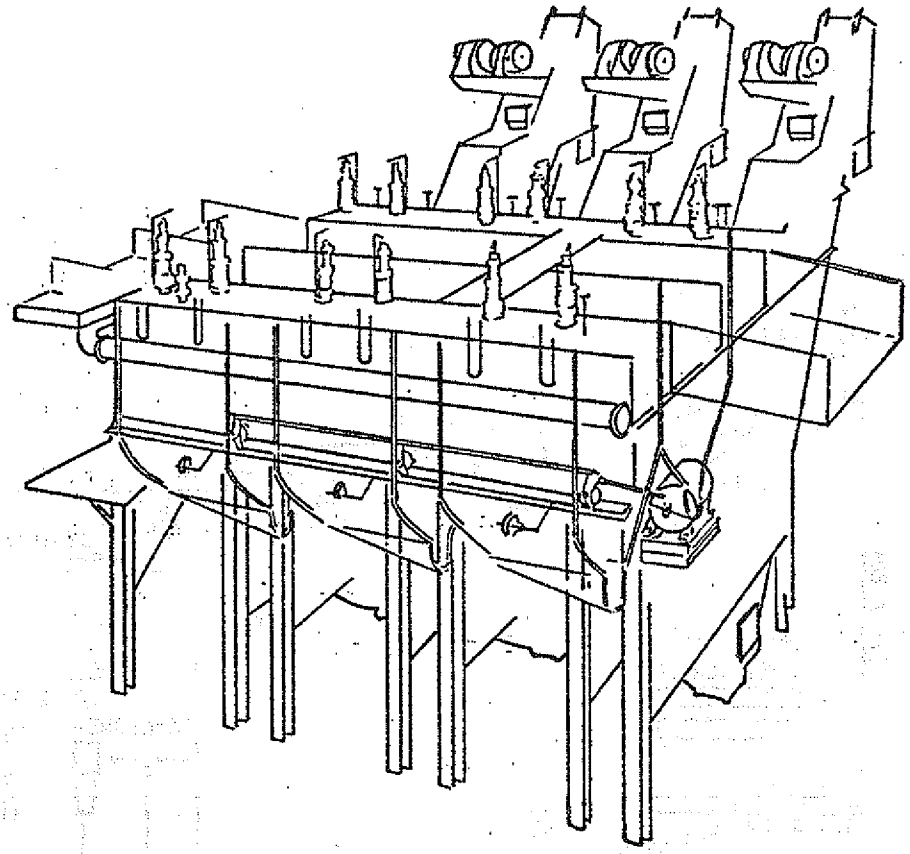

Figure 2.19-11. Air-pulsated jig.[21]

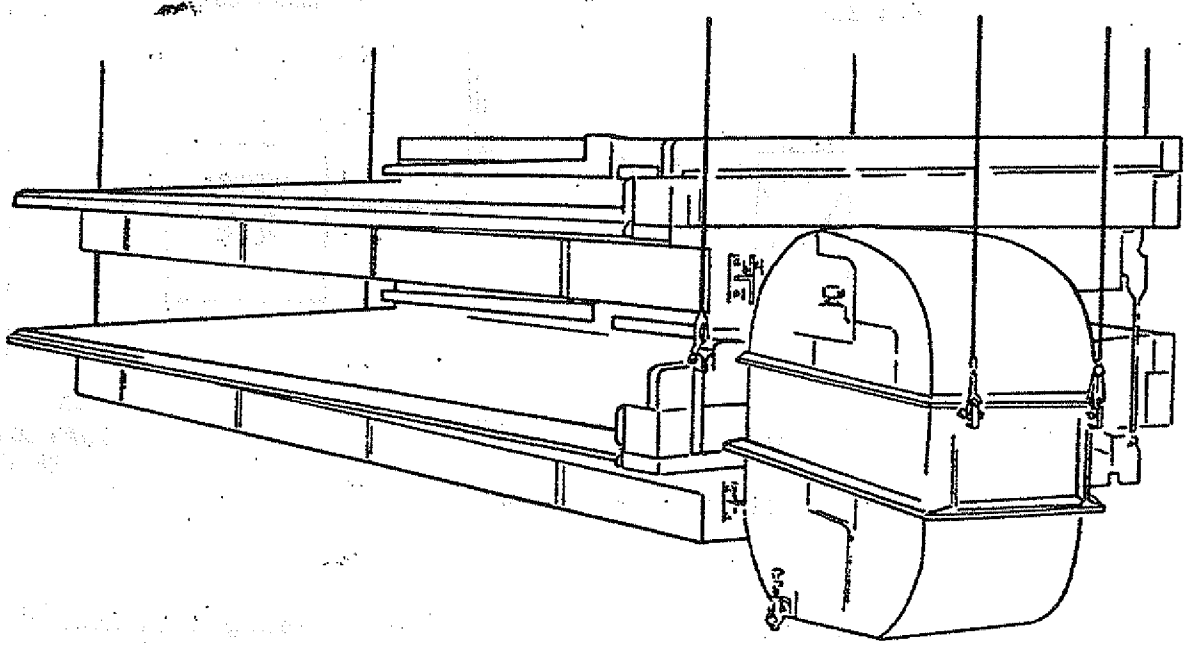

Figure 2.19-12. Deister table.[21]

The jig operates on the principles of setting in rising and falling water currents. The finer coal (< 1/4 inch) is mixed with water and then poured into the tables, where the refuse is separated from the coal. Water is removed from the refuse by screening and the refuse is deposited into a bin for storage until it may be hauled to a disposal area. The washed coal is then dewatered by using a stationary gravity screen or "sieve bend", where the fines are removed and sent to a centrifuge for dewatering and extraction of the fines. Finally, the washed coal is loaded or conveyed to a thermal dryer.[19]

A Diester table has a flat, riffled surface (about 12 square feet in area) which oscillates perpendicularly to the riffles toward the flow of coal. The heavy reject material falls off one end of the table, while the light coal is discharged off the opposite end. The remaining material is distributed in between.[19,20]

A heavy-media wash plant performs the cleaning of coal by flotation in a medium with a selected specific gravity, in which a dispersion of finely ground magnetite (Fe_3O_4) is maintained. Figure 2.19-13 depicts a typical heavy-media cleaning circuit.[22]

In this type of plant, the raw coal is first separated at 1/4 inch on an inclined screen. The oversize fraction is transferred to a flat, wet screen, where the finer particles are sprayed off the > 1/4 inch coal. The oversize material from this wet screen is then discharged into a heavy-media bath, where the refuse is separated from the coal. The refuse is then dewatered by discharging to a screen. The medium which is removed from the bath is divided into two parts, one returning to circulation via the heavy-medium sump and the other being pumped to the magnetite recovery system. The refuse is discharged from the screen for disposal. The coal is next removed from the washer to a rinse screen, where the coal is dewatered and

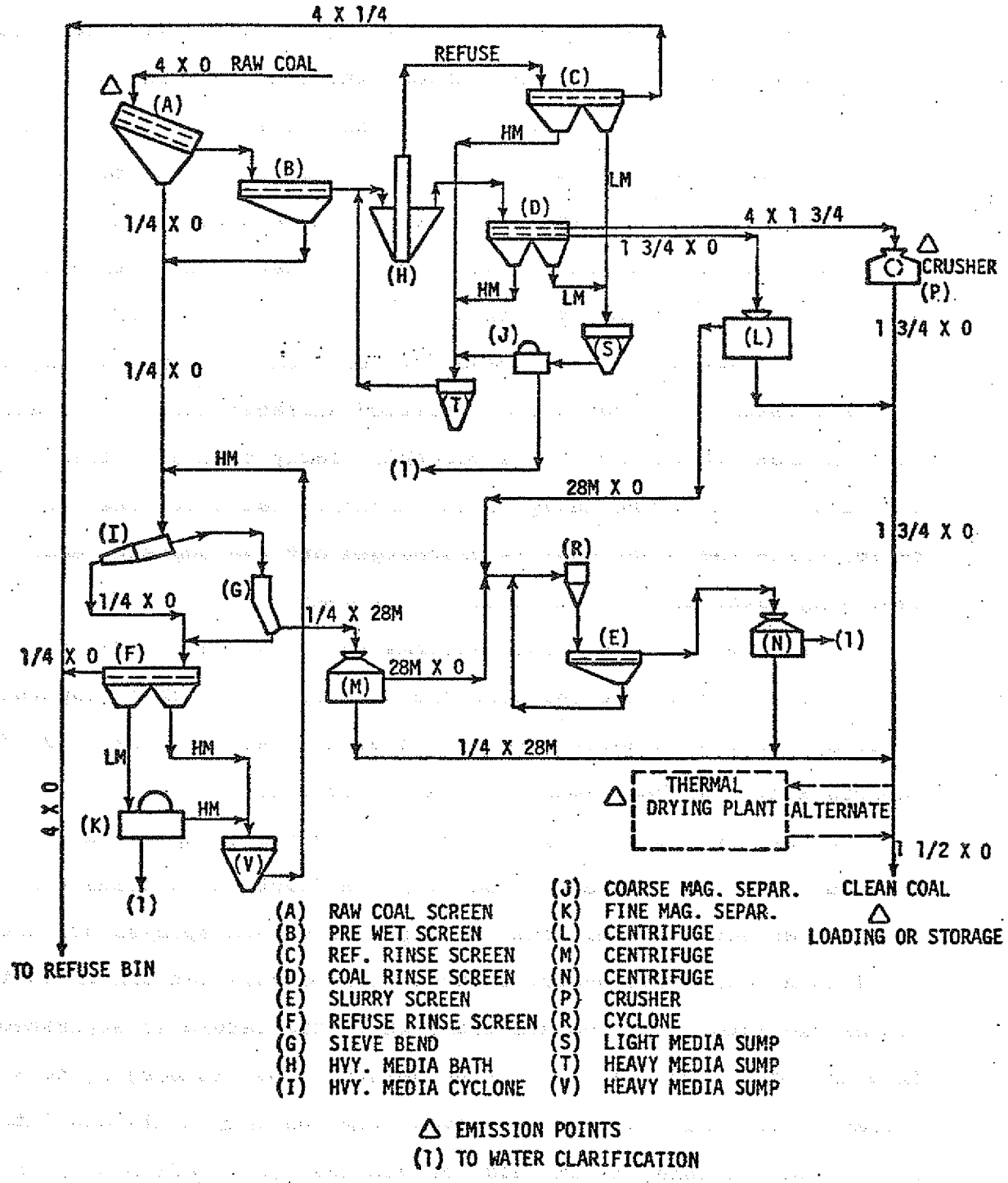

Figure 2.19-13. Heavy-media cleaning circuit.[23]

the resulting medium is treated similarly to that from the refuse screen. The washed coal is then centrifuged, crushed, and stored or loaded. The fine coal (< 1/4 inch) from the raw coal screens is combined with magnetite and water and pumped to a heavy-media cyclone as shown in Figure 2.19-14, where the coal is separated from the refuse by cyclonic action. The heavy-medium used in the cyclone is generally finer than that used in the heavy-media bath. The refuse from the heavy-media cyclone is then dewatered and the medium is recovered in a manner similar to that in the previous processes. Finally, this coal is then discharged over a sieve bend, centrifuged and transferred to a thermal dryer or to storage or loading.[24]

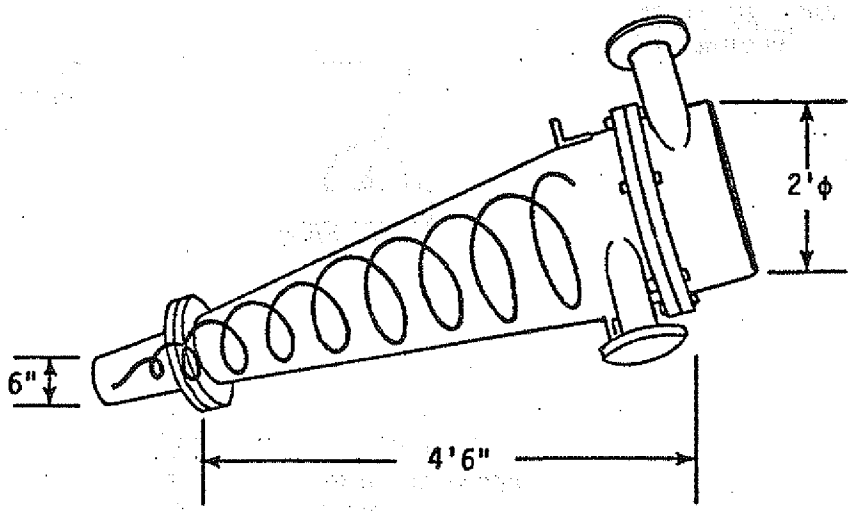

Figure 2.19-14. Heavy-media cyclone.[25]

The diluted magnetite is recovered via magnetic separators which consist of a shaft-mounted steel drum containing an interior fixed magnet. This cylinder rotates within a vessel containing coal slurry and magnetite, thereby retrieving the solid magnetite from the slurry via a magnetic field within the drum. Generally, each bath and cyclone have their own separate magnetic separator.[26]

The centrifuge effluents contain < 28 mesh coal which was broken from larger pieces of clean coal. These effluents are thickened in a cyclone, deslimed on a screen, and centrifuged before storage or loading.[27]

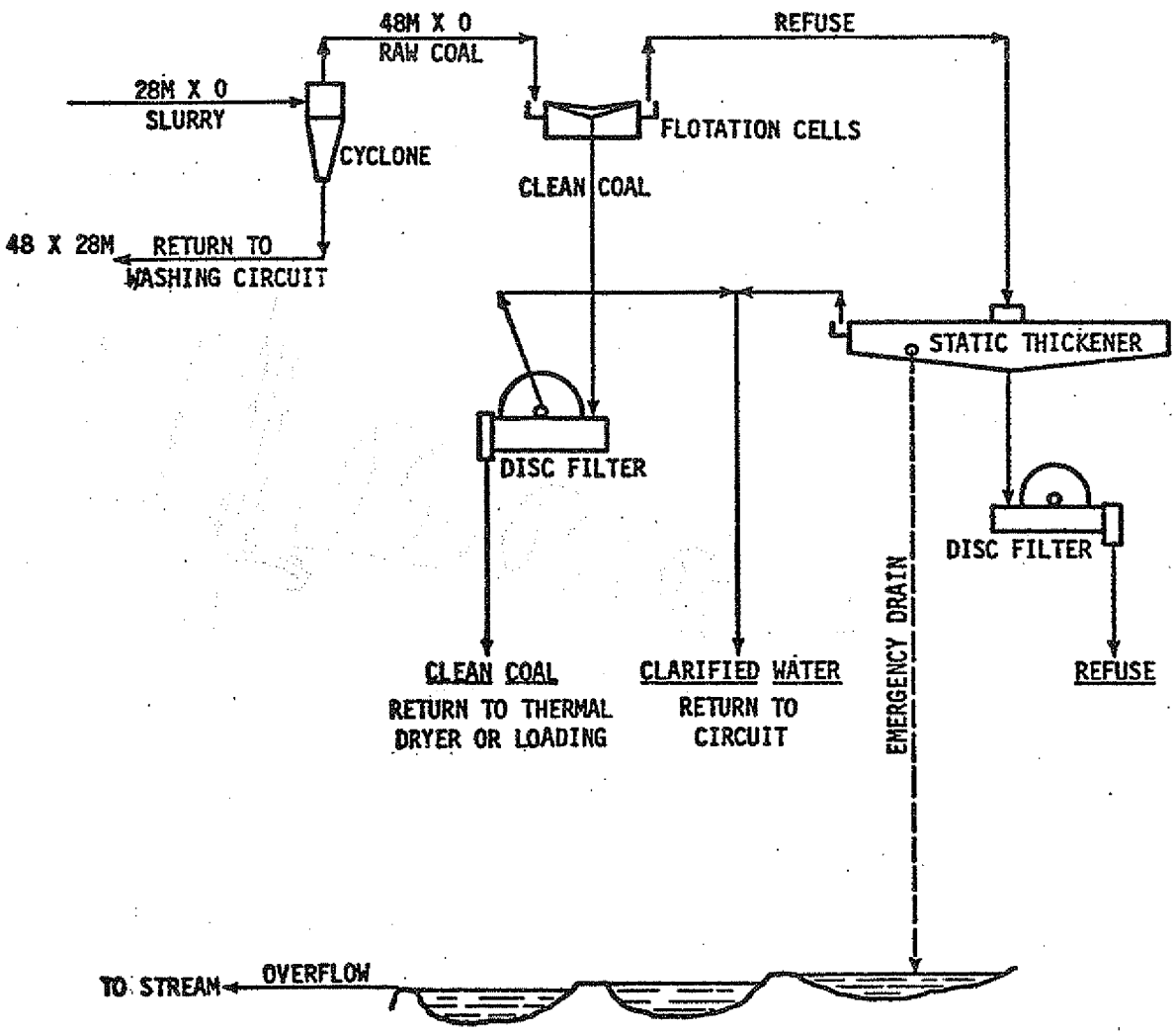

Figure 2.19-15. Water clarification circuit.[28]

A water clarification plant is also an integral part of a coal wash plant. It receives all of the slurry from the washing plant, separates the 48 mesh by 0 fraction for cleaning, and recycles water back to the plant. A typical clarification plant is shown in Figure 2.19-15. The 48 mesh by 0 fraction is discharged to froth flotation cells, where it is mixed with a light oil. The coal becomes coated with the oil and floats off the top of the cells to a disc filter, where the excess water is vacuumed off through a filter. The water is then recycled by pump back to the wash plant, and the coal fines are transported to a thermal dryer, storage or loading. A froth flotation unit is shown in Figure 2.19-16.[27]

The refuse, which does not accept the oil coating, sinks to the bottom of the flotation cells and is removed along with the incoming water to a static thickener. A static thickener is a large setting tank which allows enough retention time for the refuse to sink to the bottom. The clarified water is drawn off the top of the thickener by skimming troughs located around the perimeter of the tank, and is sent back to the wash plant.[27]

The static thickener contains a rotating rake which rakes the refuse at the bottom of the tank to the center where it is collected by a pump and transferred to a disc filter. The disc filter returns some of the water back to the wash plant and discharges the solids as refuse.[30]

The thermal drying of coal is used at coal processing facilities employing washing equipment. Generally, coal is dryed via a thermal dryer for one or more of the following reasons:

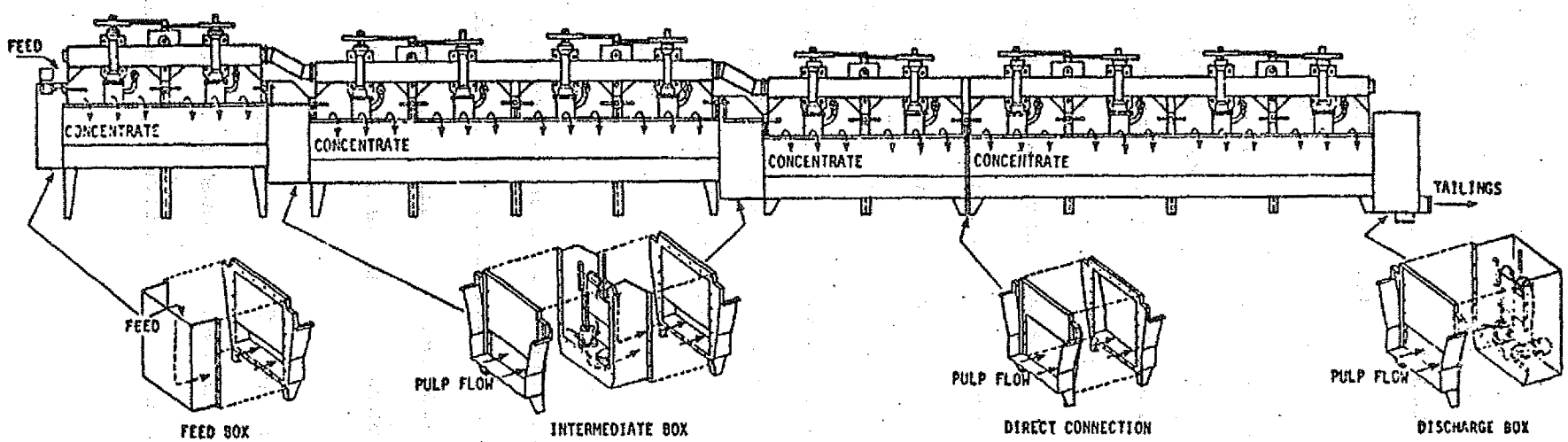

Figure 2.19-16. Froth flotation unit.[29]

1. to avoid freezing difficulties and to facilitate handling during shipment, storage, and transfer;
2. to maintain high pulverizer capacity;
3. to improve the quality of coal used for coking; and
4. to decrease transportation costs.[31]

Thermal dryers are generally used to dry the 1/4 by 0 inch fraction. However, sometimes the plus 1/4 inch portion is dried for ease of screening.[15]

Thermal dryers are simply contacting devices where hot exhaust gases from the combustion process in the dryer are used to heat the wet coal and to evaporate the surface moisture. There are seven basis types of thermal dryers which are presently used: rotary, screen, cascade, continuous carrier, flash or suspension, multilouver, and fluidized bed. However, the most prevalent types of thermal dryers are the flash and fluidized bed dryers.[32]

A rotary dryer consists of a rotating cylindrical drum (8 to 10 feet in diameter, 65 to 80 feet long) in which the wet coal flows countercurrently to the flow of hot gases. The dryer contains lifting vanes which help drop the coal through the hot gases.[32,33]

A screen dryer performs the drying function by transporting the wet coal over reciprocating screens while hot gases are passed through the bed. This dryer is usually used for coal in a size range from 1/2 mm to 2 inches. Figure 2.19-17 illustrates a typical screen dryer.[32,33]

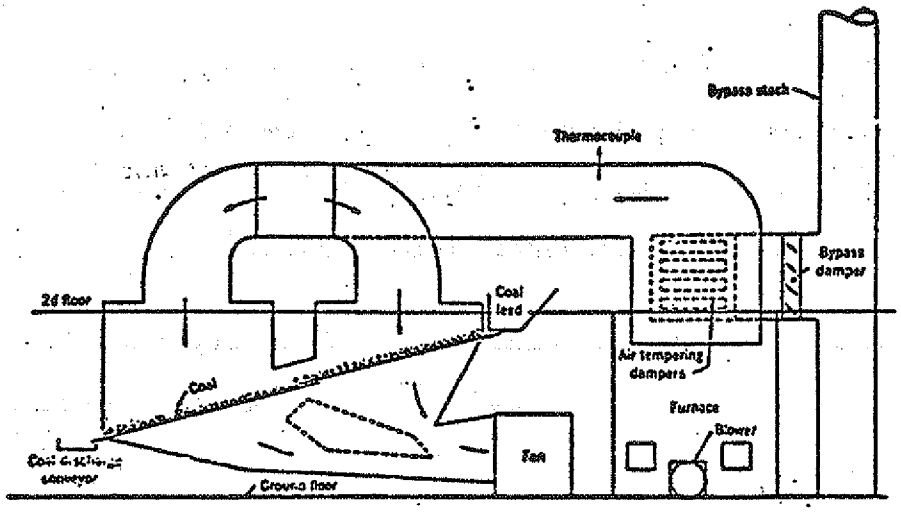

Figure 2.19-17. Screen-type thermal coal dryer.[32]

In a cascade dryer, wet coal is first fed to the dryer via a rotary feeder. The wet coal cascades through wedge-wire shelves which vibrate. Simultaneously, hot gases are drawn upward through and between the wedge-wire shelves. The dried coal is then collected at the bottom of the dryer and removed. This type of dryer is most commonly used for drying fine coal (3/8 x 0 inch). A cascade dryer is shown in Figure 2.19-18.

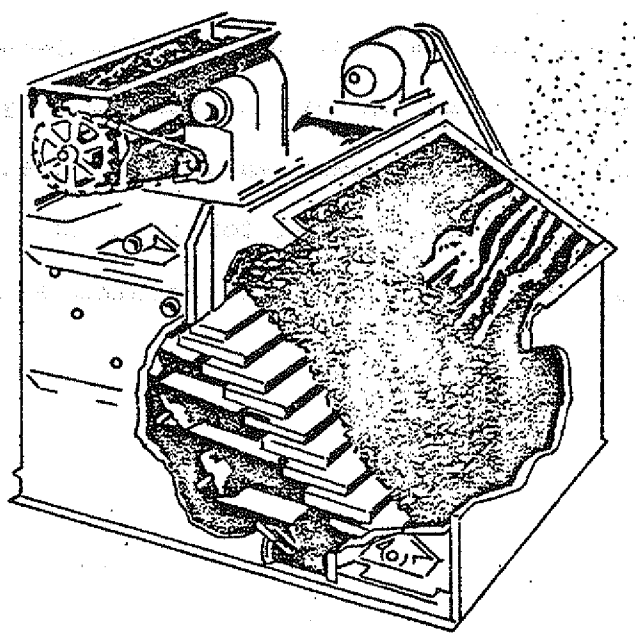

Figure 2.19-18. Cascade thermal coal dryer.[35]

A continuous carrier thermal coal dryer is a very uncommon type of dryer. A literature survey provided no description or illustration of this type of dryer.

A flash or suspension dryer is the second most used type of dryer. In this dryer, the hot gases generated in the combustion furnace of the dryer transport the wet coal up a riser. The turbulence created in the riser provides an excellent drying environment. This type of dryer is used for extremely fine coal with the top size not exceeding 3/8 inch. A flash or suspension dryer is shown in Figure 2.19-19.[32,36]

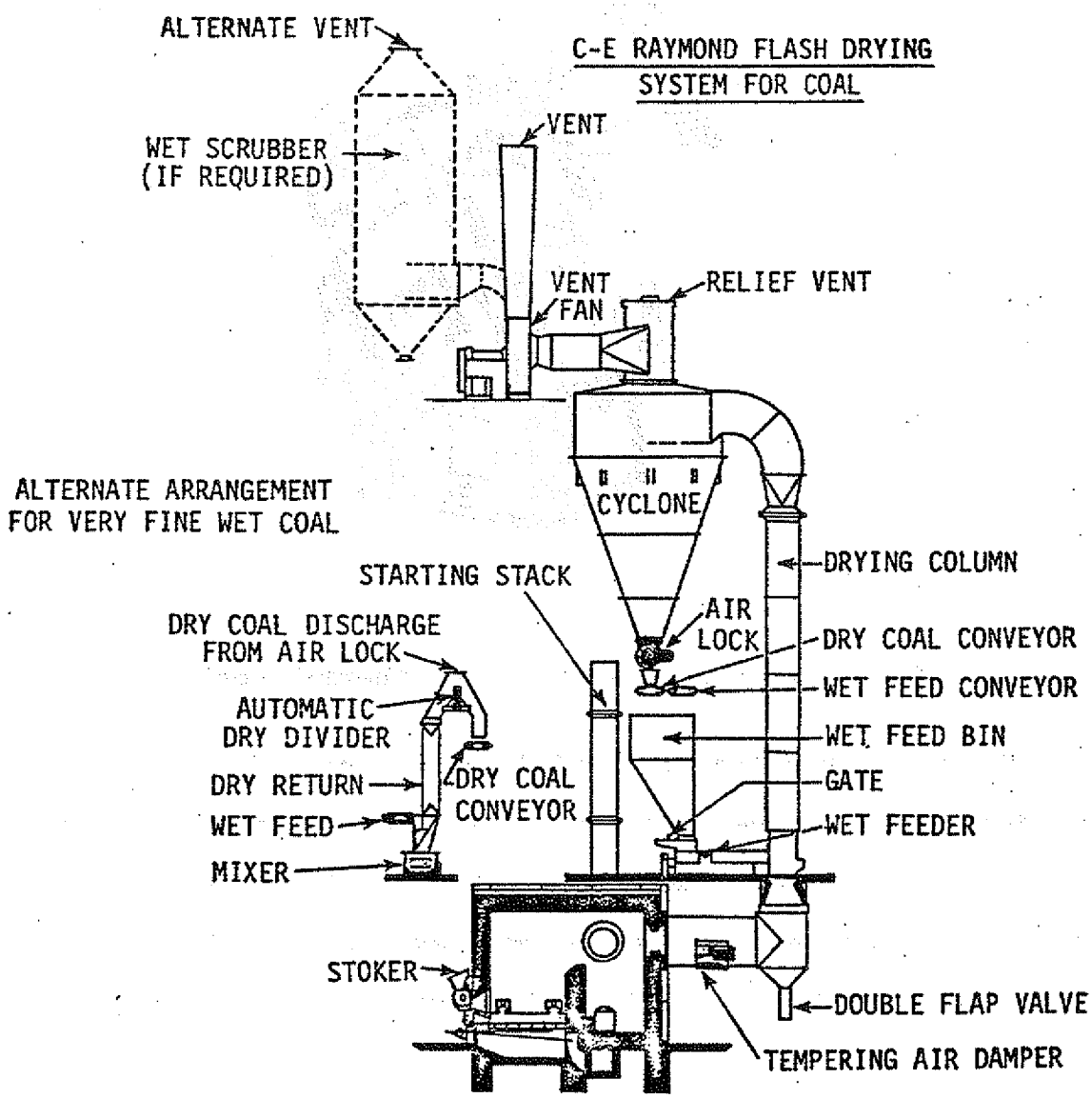

Figure 2.19-19. Flash or suspension thermal coal dryer.[37]

A multilouver dryer, shown in Figure 2.19-20, is used primarily for drying large volumes of coal and for drying coal which requires rapid drying. In this type of dryer, wet coal is transported up in flights and then flows downward in a shallow bed over the ascending flights. The coal gradually moves across the dryer during each pass from the feed entrance to the discharge area.[38]

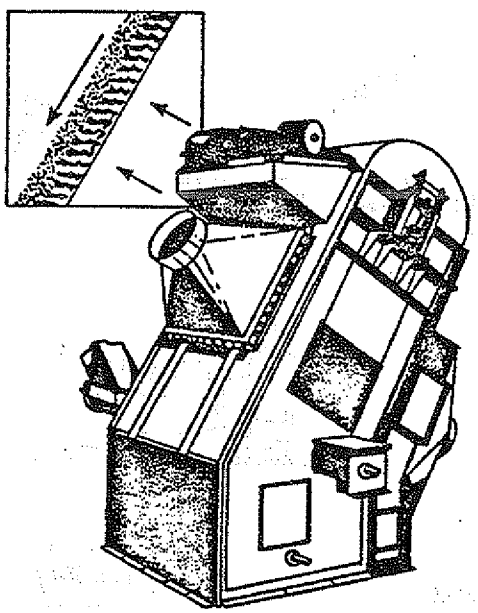

Figure 2.19-20. Multilouver thermal coal dryer.[35]

The most prevalent type of dryer in use today is the fluidized bed dryer. This dryer contains a perforated plate in a negative pressure fluidizing chamber above which coal is suspended by a rising column of hot gases. The dried coal exists from the dryer at an overflow weir. Figure 2.19-21 illustrates a typical fluidized bed dryer.[32,39]

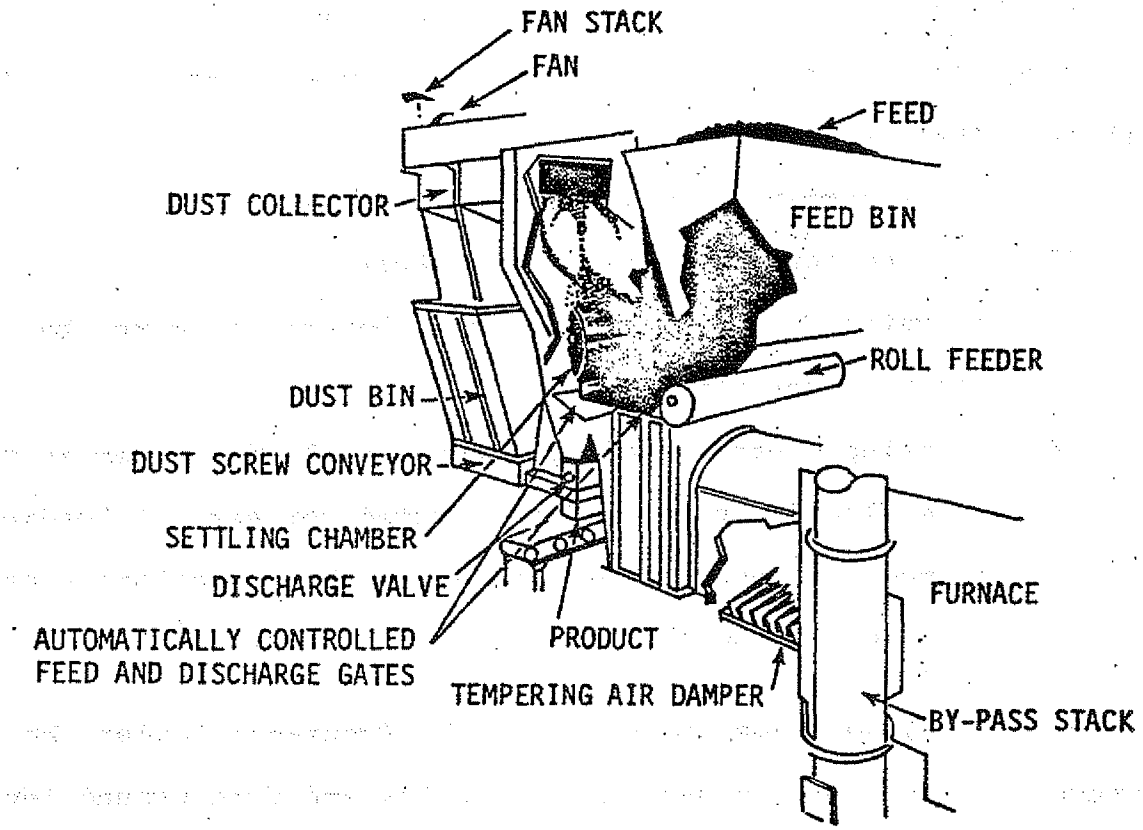

Figure 2.19-21. Fluidized bed thermal coal dryer.[40]

After washing and drying, mines using unit train shipment, usually store enough clean coal to fill a train. Silos are often used for this purpose. Furthermore, silo storage prevents accumulation of moisture and exposure to wind. Some mines employ open storage, using conveyors for loading. Lastly, at some mines, railroad cars or barges are loaded directly as the coal is processed.

In general, the method of loading coal is dependent on the size of the processing plant, the available transportation mediums, and the location of the end users. The transportation mediums most often used are barge, rail, truck, and overland conveyor.

Barge loading of coal is usually performed by any one of five methods. These are:

(1) truck dumping directly into the barge,

(2) loading through a stationary chute,

(3) elevating - boom loading, where barges are moved back and forth in the river beneath,

(4) floating - barge loading, where the loading boom is mounted on a floating barge and is pivoted for ease of loading, and

(5) tripper - conveyor loading, where the barges are stationary and the loading chute moves back and forth.[41]

Rail car loading may be performed by front-end loader, belt conveyor, booms from overhead storage silos and from ground level storage piles with underground loading. Silo loading into rail cars is used frequently at large coal processing plants where unit trains are flood-loaded through telescopic chutes. Such silos commonly have a capacity ranging from 10,000 to 15,000 tons.[42]

Truck loading is performed through the use of front-end loaders, belt conveyors and overhead storage silos.

With overland conveyors the coal is transported directly to the end user (usually a power plant).

In Ohio, the majority of all coal is loaded into either trucks or railroad cars. In 1977, of the approximately 47 million tons of coal produced, the disposition of the coal was as follows:[43]

Truck	23.54 million
Rail	13.17 "
Conveyor	6.48 "
Barge	3.28 "
Storage	0.33 "
Other	0.14 "

The potential sources of fugitive dust emissions from coal processing plants are the unloading of ROM coal, primary crushing, secondary crushing/screening, transfer and conveying, cleaning, storage of processed coal, and the loading of coal. These sources are indicated in Figure 2.19-1.

The fugitive dust emissions created by vehicle traffic over roadways at the processing plant is addressed in Section 2.1.1. The fugitive dust emissions created by vehicular movement around storage piles is also addressed in Section 2.1.1.

For additional information with respect to fugitive dust emissions from coal storage piles and coal handling, the reader is referred to Section 2.1.2 and 2.1.3, where a detailed discussion is presented.

2.19.2 Fugitive Dust Emission Factors

The estimated emission factors for coal processing plant fugitive dust sources as identified in Section 2.19.1 are summarized in Table 2.19-2. As noted in Table 2.19-2, the reliability of all of the emission factors is poor since they were based on engineering estimates.

TABLE 2.19-2. FUGITIVE DUST EMISSION FACTORS FOR COAL PROCESSING PLANTS

Source	Emission factor	Reliability rating	Reference
(1) Unloading			
Truck	0.02 lb/ton unloaded	E	44
Rail car	0.40 lb/ton unloaded[a]	E	45, 46
(2) Primary crushing	0.02 lb/ton crushed	E	47
(3) Secondary crushing/ screening	0.16 lb/ton crushed/ screened	E	47
(4) Transfer and conveying	0.20 lb/ton transferred or conveyed	E	48
(5) Cleaning	Negligible		49
(6) Storage			
Loading onto pile	0.08 lb/ton loaded	D	50
Vehicular traffic	0.16 lb/ton stored	D	50
Loading out	0.10 lb/ton loaded	D	50
Wind erosion	0.09 lb/ton stored	D	50
(7) Loading			
Truck	0.02 lb/ton loaded	E	44
Rail car	0.40 lb/ton loaded	E	45, 46
Barge	0.40 lb/ton loaded	E	45, 46

[a] For bottom dumping only. Emission factors for railroad car unloading by side and rotary dumping were unavailable.

Since there were a number of published emission factors for many of the fugitive dust sources, the factors selected for this study were those most widely referenced in the literature and those which would be more applicable to a "typical" fugitive dust source rather than to a site-specific source.

The emission factor for truck unloading was developed by PEDCo by taking half of the published EPA emission factor for truck dumping. The rationale for this derivation was that coal dumping would be expected to generate less fugitive dust emissions than comparable dumping of aggregate. This is because of the larger size of the coal being handled and its higher moisture content. The 50 percent reduction was based on the estimated control efficiency of watering which PEDCo believes is comparable to the effects of higher moisture content and larger material size.[44]

The emission factor for rail car unloading was taken from Section 2.4 for rail car unloading at coal-fired power plants.[45] This factor is also cited by another source for all modes of transport.[46]

The estimated emission factors for primary crushing and secondary crushing and screening were based on estimates by PEDCo from limited test data and engineering judgment.[47]

The estimated emission factor for transfer and conveying was derived from emission estimates made by ERT for combined processing sources at coal mines in northwestern Colorado. The emission factor of 0.20 pound per ton was developed by subtracting the emission estimates for crushing (0.18 lb/ton) and storage (0.054 lb/ton) from the estimated emission factor (0.44 lb/ton) for the processing sources which were identified as transfer and conveying, crushing, and storage. One study points out that the resulting emission factor for transfer and conveying does seem high when compared to estimated

emissions from conveying other material. This may be an indication that other sources may have been included in the ERT emission factor for the processing sources.[48]

Our reference in this study indicated that fugitive dust emissions from coal cleaning operations were negligible.[49] No published fugitive dust emission factors for coal cleaning were found in the literature.

The emission factors for storage were based upon limited test data and engineering judgment. Their reliability is, however, considered below average.[50]

The emission factors for loading were assumed to be the same as for unloading. This assumption was made by one source with respect to unloading and loading operations in general.[46]

2.19.3 Particle Characteristics

No data were located on the particle size distributions for fugitive dust emissions from coal processing plant sources.

For coal dust emissions, one source reports that at a concentration of 2 mg/m^3 detrimental health effects may occur if the respirable dust fraction contains less than 5 percent quartz.[51] Furthermore, another source indicates that the potential health hazards of coal dust are dependent on the amount of silica (SiO_2) present in the dust.[52] Exposure to silica by breathing over extended periods of time has resulted in a respiratory problem known as silicosis. Silicosis is a chronic lung disease characterized by diffuse fibrosis.

Coal dust emissions from fugitive dust sources at coal processing plants often result in the creation of nuisance conditions if the plant is located near a densely populated area. Coal dust may cause significant property damage through the soiling of the exterior of vehicles and homes, since such dust is difficult to remove without an extensive cleaning effort.

2.19.4 Control Methods

This section presents the fugitive dust control methods which are or may be used by the coal processing industry for those sources identified in this study.

The fugitive dust emissions from truck or rail car may be controlled by 1) total enclosure with ventilation to a fabric filter, 2) a partial enclosure, 3) a water spray system, and 4) a wet suppression system using water and chemical wetting agents, or foams.

For primary and secondary crushing and screening operations, control methods consist of enclosures with ventilation to a fabric filter and wet suppression systems utilizing a chemical wetting agent or foams.

For fugitive dust emissions from conveying operations, the control methods generally used are partial (top) enclosure, total enclosure, or wet suppression. Also, fugitive dust emissions created by the droppings from the return belt conveyors may be controlled through the use of dribble pans.

Fugitive dust emissions from transfer points may be controlled through the use of total enclosure, enclosure with ventilation to a fabric filter, or wet suppression systems using chemical wetting agents.

Cleaning activities are usually performed inside an enclosed building and may undergo wet processing operations. Therefore, cleaning activities are insignificant sources of fugitive dust emissions, and no control is generally required.

The fugitive dust emissions from storage piles consist of four sources: load-in, wind disturbance, vehicular traffic and load-out. The control methods available for those sources vary with the type of source.

For load-in at storage piles, control methods include 1) enclosure through the use of stone ladders, 2) wind guards, 3) telescopic chutes, 4) wet suppression and, of course, operating precautions.

Fugitive dust emissions from wind disturbances at storage piles may be controlled through the use of wet suppression and the application of surface crusting agents. Also, operating precautions such as orienting the storage piles perpendicular to prevailing winds to reduce the exposed surface is helpful in reducing wind erosion.

For vehicular traffic at coal storage piles, the control methods are listed in Section 2.1.1.

For loading out from coal storage piles, control measures consist of the installation of under-pile conveyor systems, bucket wheel reclaimer systems, and wet suppression.

For coal storage in silos or bins, fugitive dust emissions are normally controlled by covering conveyors which transport and dump the coal into the silos or bins. Also, the fugitive dust in the displaced air from silos and bins may be controlled by the addition of either bin vent filters or exhausted fabric filters; however, these emissions are not considered significant.

Control methods for loading operations consist of telescopic chutes and wet suppression. For operations which use wet suppression in subsequent processes, generally only telescopic chutes are required for dust control if an adequate treatment of wetting agent has been previously applied to the coal.

2.19-5 Recommended Reasonably Available Control Measures (RACM)

The RACM selections for coal processing fugitive dust emission sources are presented in Table 2.19-3.

The selected control technique for unloading of coal by both rail car and truck is a wet suppression system utilizing a chemical wetting or foaming agent for more efficient control of fugitive dust. This measure is less costly than the more efficient application of a fabric filter, and is more efficient than the other less reliable methods of control.

Primary and secondary crushing and screening activities may be effectively controlled by using a wet suppression system which is also used for the unloading and transfer and conveying operations. This system is less costly than the alternate of installing an enclosure with ventilation to a fabric filter.

Wet suppression is the selected RACM for transfer and conveying because it is less costly than the alternative of enclosure with or without a fabric filter.

Since cleaning operations are generally performed inside enclosed buildings and/or include wet processing, no control is required.

Coal storage pile load-in activities can be controlled to a high degree by the use of telescopic chutes supplemented by wet suppression systems. For wind erosion and loading activities, wet suppression has also been selected as RACM due to its high efficiency and relatively low cost.

For loading activities, RACM is the use of wet suppression systems and/or telescopic chutes. If an adequate treatment of wetting agent has been applied in subsequent operations, only telescopic chutes need be used. For loading activities which do not use wetting agent applications in subsequent operations, both telescopic chutes and wet suppression systems are recommended.

TABLE 2.19-3. A SUMMARY OF THE CONTROL ALTERNATIVES, EFFICIENCIES AND COSTS, AND THE RACM SELECTIONS FOR FUGITIVE DUST EMISSIONS FROM COAL PROCESSING PLANTS

Fugitive dust sources	Control alternatives	Control efficiency, %	Control costs, Jan., 1980 $		Cost benefit, $/lb	RACM selection
			Capital	Annualized		
(1) Unloading ROM coal						
Rail car	Enclosure, vent to fabric filter	99[a]	120,000[a]	39,000[b]	0.03	Wet suppression (chemical)
	Enclosure	70[c]	33,000[d]	5,600[e]	0.005	
	Wet suppression (chemical)	80[f]	98,000[g]	37,000[h]	0.01	
	Watering	50[i]	NA	NA	NA	
Truck	Enclosure, vent to fabric filter	99[a]	87,400[j]	23,000[k]	0.31	Wet suppression (chemical)
	Enclosure	70[c]	11,000[l]	1,900[e]	0.03	
	Wet suppression (chemical)	80[f]	98,000[g]	37,000[h]	0.03	
	Watering	50[i]	NA	NA	NA	
(2) Primary crushing	Enclosure, vent to fabric filter	99[m]	129,000[n]	38,000[b]	0.06	Wet suppression (chemical)
	Wet suppression (chemical)	90[m]	o	o	0.01	
(3) Secondary crushing/ screening	Enclosure, vent to fabric filter	99[m]	p	p	0.06	Wet suppression (chemical)
	Wet suppression (chemical)	90[m]	o	o	0.01	

(continued)

TABLE 2.19-3 (continued)

Fugitive dust sources	Control alternatives	Control efficiency, %	Control costs, Jan., 1980 $		Cost benefit, $/lb	RACM selection
			Capital	Annualized		
(4) Transfer and conveying	Enclosure of conveyors and transfer points, vent to fabric filter	99[a]	100,000[q]	30,000[r]	0.04	Wet suppression (chemical)
	Enclosure of conveyors and transfer points	70[a]	28,000[s]	8,400[r]	0.02	
	Wet suppression (chemical)	90[m]	o	o	0.01	
(5) Cleaning	Enclosure	100[m]	NA	NA	NA	No control
(6) Storage						
Loading onto piles	Enclosure (stone ladder)	80[t]	24,000[t]	4,000[e]	0.02	Wet suppression (chemical), telescopic chutes
	Telescopic chutes	75[t]	8,600[t]	1,500[e]	0.01	
	Wet suppression (chemical)	75[t]	73,000[t]	36,000[h]	0.20	
	Wind guards	50[t]	61,000[t]	12,000[u]	0.10	
Wind erosion	Enclosures	100[t]	15,000,000[t]	2,550,000[e]	9.44	Wet suppression (chemical)
	Wet suppression (chemical)	99[t]	13,400[t]	6,400[v]	0.02	
Loading out	Under pile conveyor	80[w]	14,520,000[x]	2,900,000[u]	12.08	Wet suppression (chemical)
	Wet suppression (chemical)	95[t]	73,000[t]	36,000[h]	0.13	
	Bucket wheel reclaimer	80[t]	6,480,000[t]	1,300,000[u]	5.42	

(continued)

TABLE 2.19-3 (continued)

Fugitive dust sources	Control alternatives	Control efficiency, %	Control costs, Jan., 1980 $		Cost benefit, $/lb	RACM selection
			Capital	Annualized		
(7) Loading						
Rail car/barge	Wet suppression (chemical)	80[t]	73,000[t]	36,000[h]	0.04	Wet suppression (chemical), telescopic chutes
	Telescopic chutes	75[t]	8,600[t]	1,500[e]	0.01	
Truck	Wet suppression (chemical)	80[t]	73,000[t]	36,000[h]	0.75	Wet suppression (chemical), telescopic chutes
	Telescopic chutes	75[t]	8,600[t]	1,500[e]	0.03	

NA = Not available.

[a] Reference 53.

[b] Reference 54. Based on a 750 tph rock crushing plant and an operating rate of 5,000 hrs/yr.

[c] Reference 55. Partial enclosure without exhausting to a fabric filter.

[d] Reference 56. Based on (50' x 30' x 21') 10 Ga steel enclosure of rail car dump.

[e] Includes capital charges at 17% of capital costs.

[f] Reference 53.

[g] Reference 57. Based on a 750 tph rock crushing plant. Includes spray application at unloading, primary crushing, secondary crushing/screening, transfer and conveying.

[h] Reference 58. Based on 5,000 hr/yr operation.

[i] Reference 59.

[j] See Section 2.3, p. 2-163. Based upon 20' x 20' x 15' enclosure and a jet pulse baghouse treating 10,000 acfm @ 70°F with a 6.5 to 1 air/cloth ratio for a limestone truck unloading operation.

[k] Reference 54. Based on a 750 tph rock crushing plant and an operating rate of 5,000 hrs/yr. Annual cost includes enclosure cost.

(continued)

TABLE 2.19-3 (continued)

[l] Reference 56. Based on (20' x 20' x 15') 10 Ga steel enclosure of rail car dump.

[m] Engineering estimate.

[n] Reference 60. Based on 20,000 acfm fabric filter.

[o] Costs included above, see footnote g. Assumes rail car unloading.

[p] Costs for secondary crushing/screening included in cost for primary crushing.

[q] Reference 53. Based on 400 ft of conveyor and three transfer points. Capital costs based on $70/ft for conveyors and $18,000/transfer point.

[r] Annualized cost based on 30% of capital cost.

[s] Reference 53. Based on 400 ft of conveyor and three transfer points. Capital costs based on $35/ft for conveyors and $3,000/transfer point.

[t] Reference 61.

[u] Includes capital charges and maintenance at 20% of capital.

[v] Reference 61. Based on $.052/ft^2 storage area, 250,000 ton storage and 1 month storage.

[w] Reference 62.

[x] Reference 62. Based on $47.5/ton of storage.

REFERENCES FOR SECTION 2.19

1. Szabo, M. Environmental Assessment of Coal Transportation. PEDCo Environmental, Inc. Prepared for U.S. Environmental Protection Agency, Industrial Environmental Research Laboratory, Office of Research and Development. Cincinnati, Ohio. Contract No. 68-02-1321. EPA-600/7-78-081. May 1978. p. 59.

2. Jutze, G., K. Axetell, and R. Amick. Evaluation of Fugitive Dust Emissions from Mining. PEDCo Environmental, Inc. Prepared for U.S. Environmental Protection Agency, Industrial Environmental Research Laboratory, Office of Research and Development, Cincinnati, Ohio. Contract No. 68-02-1321, Task No. 36. EPA-600/9-76-001. June 1976. p. 44.

3. Inspection Manual for the Enforcement of New Source Performance Standards: Coal Preparation Plants. PEDCo Environmental, Inc. Prepared for U.S. Environmental Protection Agency, Division of Stationary Source Enforcement, Washington, D.C. Contract No. 68-01-3150. EPA-340/1-77-022. November 1977. p. 3-2.

4. Ibid. p. 3-3.

5. 1977 Division of Mines Report. State of Ohio. Department of Industrial Relations. p. 10.

6. Op. cit. Reference 3. pp. 4-5.

7. Ibid. p. 4-6.

8. Ibid. p. 4-7.

9. Ibid. p. 4-8.

10. Weisburg, M. Field Operations and Enforcement Manual for Air Pollution Control. Volume III: Inspection Procedures for Specific Industries. System Development Corporation. Prepared for U.S. Environmental Protection Agency, Office of Air Programs, Research Triangle Park, North Carolina. Contract No. CPA 70-122. APTD-1102. August 1972. pp. 7.13.8, 7.13.9.

11. Ibid. p. 7.13.9.

12. Ibid. p. 7.13.10.

13. Op. cit. Reference 3. p. 6-7.

14. Ibid. p. 6-8.

15. Ibid. p. 4-4.

16. Ibid. p. 4-9.

17. Ibid. p. 4-10.

18. Ibid. p. 4-11.

19. Ibid. p. 4-12.

20. Ibid. p. 4-13.

21. Ibid. p. 4-14.

22. Ibid. p. 4-15.

23. Ibid. p. 4-16.

24. Ibid. pp. 4-15, 4-18.

25. Ibid. p. 4-17.

26. Ibid. p. 4-18.

27. Ibid. p. 4-19.

28. Ibid. p. 4-20.

29. Ibid. p. 4-21.

30. Ibid. pp. 4-19, 4-22.

31. Formica, P.N. Control and Uncontrolled Emission Rates and Applicable Limitations for Eighty Processes. Prepared for U.S. Environmental Protection Agency, Research Triangle Park, North Carolina. Contract No. 68-02-1382, Task Order No. 12, Report No. EPA-450/3-77-016, (PB 266 978), September 1976. p. VIII-20.

32. Ibid. p. VIII-21.

33. Op. cit. Reference 10. p. 7.13.12.

34. Op. cit. Reference 3. p. 4-26.

35. Ibid. p. 4-24.

36. Op. cit. Reference 10. p. 7.13.14.

37. Op. cit. Reference 3. p. 4-25.

38. Ibid. pp. 4-25, 4-26.

39. Ibid. p. 4-22.

40. Ibid. p. 4-23.

41. Op. cit. Reference 1. pp. 36 and 37.

42. Ibid. p. 29.

43. Op. cit. Reference 5. p. 5.

44. Op. cit. Reference 2. pp. 38, 40.

45. Reasonably Available Control Measures for Fugitive Dust. Ohio EPA. p. 2-175.

46. Op. cit. Reference 1. p. 63.

47. Technical Guidance for Control of Industrial Process Fugitive Particulate Emissions. PEDCo Environmental, Inc. Prepared for U.S. Environmental Protection Agency, Office of Air and Waste Management, Office of Air Quality Planning and Standards, Research Triangle Park, North Carolina. Contract No. 68-02-1375, Task No. 33, Project No. 3155-GG. EPA-450/3-77-010. March 1977. p. 2-241.

48. Op. cit. Reference 2. p. 46.

49. Op. cit. Reference 65. p. 2-237.

50. Open Dust Sources Around Iron and Steel Plants, Draft. Midwest Research Institute. Prepared for U.S. Environmental Protection Agency, Industrial Environmental Research Laboratory. Contract No. 68-02-2120. Research Triangle Park, North Carolina. November 2, 1976.

51. Threshold Limit Values for Chemical Substances and Physical Agents in the Wookroom Environment with Intended Changes for 1976. American Conference of Governmental Industrial Hygienists. Cincinnati, Ohio. 1976. p. 33.

52. Sax, N. I. Dangerous Properties of Industrial Materials. Fifth Edition. Litton Education Publication, 1979. p. 382.

53. Bohn, Russel, T. Cuscino, Jr. and C. Cowherd, Jr. Fugitive Emissions from Integrated Iron and Steel Plants. Midwest Research Institute. EPA-600/2-78-050. Washington, D.C. March 1978. p. 6-3.

54. Nonmetallic Minerals Industries Control Equipment Costs. Industrial Gas Cleaning Institute, Inc. Prepared for U.S. Environmental Protection Agency, Strategies and Air Standards Division, Economic Analysis Branch, Research Triangle Park, North Carolina. Contract No. 68-02-1473, Task No. 19, February 1977. p. 3-5.

55. Op. cit. Reference 53. p. 6-2.

56. Capital and Operating Costs of Selected Air Pollution Control Systems. GARD, Inc. Prepared for U.S. Environmental Protection Agency, Office of Air Quality Planning and Standards, Research Triangle Park, North Carolina. EPA-450/3-76-014. pp. 4-24 and 4-25.

57. Op. cit. Reference 54. p. 4-9.

58. Ibid. p. 4-12.

59. Op. cit. Reference 47. p. 2-245.

60. Op. cit. Reference 54. p. 3-4.

61. Op. cit. Reference 53. p. 6-6.

62. Op. cit. Refererence 65. p. 2-39.

APPENDIX FOR SECTION 2.19

Data Used in Calculations:

Hourly rate of ROM coal entering plant = 750 tph
Hourly production rate of clean coal = 600 tph
Annual production rate of clean coal = 3,000,000 tpy
Input to preparation plant (assuming 20% reject) = 3,750,000 tpy

1 Unloading ROM coal:

A. Railroad car

1. Enclosure, vent to fabric filter

Control efficiency = 99% MRI, p. 6-3
Capital cost (1977 $) = $100,000

$$\$100{,}000 \left(\frac{249.6}{204.1}\right) \approx \$120{,}000$$

Annualized cost (1977 $) = $32,000 NMI, p. 3-5

$$\$32{,}000 \left(\frac{249.6}{204.1}\right) \approx \$39{,}000$$

$$C/B = \frac{\$39{,}000}{(0.4\ \text{lb/ton})(3{,}750{,}000\ \text{tpy})(.99)}$$

$$= \$0.03/\text{lb TSP removed}$$

2. Enclosure

Control Efficiency = 70% MRI, p. 6-2
Assume an enclosure of 50' x 21' x 30'
Total area of 10 Ga plate (skirts)

$$= (21' \times 50') + 2(30' \times 50') + 2(30' \times 21')$$
$$= 1{,}050 + 3{,}000 + 1{,}260$$
$$= 5{,}310\ ft^2$$

$$\text{mass} = 5{,}310\ ft^2 \times 5.625\ lb/ft^2 \times 1.2$$
$$= 35{,}800\ \text{lbs.}$$

Cost (labor & materials) =
$(.208/\text{lb} + 0.30/\text{lb})(35{,}800\ \text{lbs}) = \$18{,}200$

Turnkey = 1.4 (18,200) = $25,500

$$\$25{,}500 \left(\frac{249.6}{192.1}\right) \approx \$33{,}000$$

Annualized cost (No O & M)
Fixed = .17(33,000) = $5,600

$$C/B = \frac{\$5,600/yr}{(0.4\ lb/ton)(3,750,000\ tpy)(.7)}$$
= $0.005/lb TSP removed

3. Wet suppression (chemical) for sources ①, ②, ③, ④

Control efficiency = 80% for 1 (MRI, p. 6-3)
= 90% for ②, ③, ④

Capital cost (1977 $) = $80,000 NMI, p. 4-9

$$\$80,000\ \frac{(249.6)}{(204.1)} = \$98,000$$

Annualized cost (1977 $) = $30,000 NMI, p. 4-12
@ 5,000 hpy

$$\$30,000\ \frac{(249.6)}{(204.1)} = \$37,000$$

$$C/B = \frac{\$37,000/yr}{(3,750,000\ tpy)[(.8)(.4)+(.9)(0.2 + .16 + .20)]}$$
= $0.01/lb TSP removed

4. Watering for sources ① and ② only

Control efficiency = 50% TG, p. 2-245
No costs available

B. Truck

1. Enclosure, vent to fabric filter

Control efficiency = 99%
Capital cost = $87,400 (Section 2.3, p. 2-163 for limestone unloading)

Annualized cost (1977 $) = $17,000 (NMI, p. 3-5)

$$\$17,000\ \frac{(249.6)}{(204.1)} = \$21,000$$

plus $2,400 fixed enclosure cost
= $23,000

$$C/B = \frac{\$23,000/yr}{(0.02\ lb/ton)(3,750,000\ tpy)(.99)}$$
= $0.31/lb TSP removed

2. Enclosure

Control efficiency = 70% MRI, p. 6-2.
Assume an enclosure of 20' x 20' x 15'

Total area of 10 Ga plate (skirts)
= (15' x 20') + 2(20'x15') + 2(20'x20')
= 1,700 ft^2

mass = 1,700 ft^2 x 5.625 lb/ft^2 x 1.2
= 11,475 lbs.

Cost (labor & materials) =
(.208/lb + 0.30/lb)(11,475 lbs.) = $5,829

Turnkey = 1.4 (5,829) = $8,160

$$\$8{,}160 \; \frac{(249.6)}{(192.1)} \approx \$11{,}000$$

Annualized cost (No O & M)
Fixed = .17 (11,000) ≈ $1,900

$$C/B = \frac{\$1{,}900/yr}{(0.02\ lb/ton)(3{,}750{,}000\ tpy)(.99)}$$
= $0.03/lb TSP removed

3. Wet suppression (chemical) for sources ①, ②, ③, ④

Control efficiency = 80% for 1 (NMI, p. 6-3)
= 90% for ②, ③, ④

Capital cost (1980 $) = $98,000

Annualized cost (1980 $) = $37,000

$$C/B = \frac{\$37{,}000/yr}{(3{,}750{,}000\ tpy)[(.8)(.02)+(.9)(.02 + .16 + .20)]}$$
= $0.03/lb TSP removed

4. Watering for sources ① and ② only

Control efficiency = 50% TG, p. 2-245
No costs available

② Primary crushing

1. Enclosure, vent to fabric filter for sources ②, ③

Control efficiency = 99%
Capital cost (1977 $) = $105,412 NMI, p. 3-4
@ 20,000 acfm

$$\$105{,}412 \; \frac{(249.6)}{(204.1)} = \$129{,}000$$

Annualized cost (1977 $) = $31,000

$$\$31,000 \left(\frac{249.6}{204.1}\right) = \$38,000$$

$$C/B = \frac{\$38,000}{(3,750,000 \text{ tpy})(.99)(.02 + .16 \text{ lb/ton})}$$

C/B = $0.06/lb TSP removed

2. Wet suppression (chemical) for sources ①, ②, ③, ④

Same as for truck & RR car unloading
Capital cost = $98,000 for RR car unloading
Annualized cost = $37,000 for RR car unloading
C/B = $0.01/lb for RR car unloading

Capital cost = $98,000 for truck unloading
Annualized cost = $37,000 for truck unloading
C/B = $0.03/lb for truck unloading

③ Secondary crushing/screening

1. Enclosure, vent to fabric filter for sources ②③
Same as for primary crushing

2. Wet suppression (chemical) for sources ①, ②, ③, ④
Same as for primary crushing

④ Transfer and conveying

1. Enclosure of conveyors and transfer points, vent to fabric filter

Control efficiency = 99% MRI, p. 6-3
Assume 400 ft of conveyor and three transfer points.

Capital cost (1977 $): (MRI, p. 6-3)
($70/ft)(400 ft) = $28,000 for conveyors
($18,000/TP)(3 TP) = $54,000 for transfer pts.

Total cost = $82,000

$$\$82,000 \left(\frac{249.6}{204.1}\right) \approx \$100,000$$

Annualized cost (@ 30% of capital cost)
= $30,000

$$C/B = \frac{\$30,000/\text{yr}}{(3,750,000 \text{ tpy})(.99)(.2 \text{ lb/ton})}$$

= $0.04/lb TSP removed

2. Enclosure of conveyors and transfer points with no control device

Control efficiency = 70% MRI, p. 6-3
Assume 400 ft of conveyor and three transfer points

Capital cost (1977 $): (MRI, p. 6-3)
($35/ft)(400 ft) = $14,000 for conveyors
($3,000/TP)(3 TP) = $9,000 for transfer pts.

Total cost = $23,000

$$\$23{,}000 \left(\frac{249.6}{204.1}\right) \approx \$28{,}000$$

Annualized cost (@ 30% of capital cost)
($28,000)(.3) = $8,400

$$C/B = \frac{\$8{,}400/yr}{(3{,}750{,}000\ tpy)(.70)(.2\ lb/ton)}$$
$$= \$0.02/lb\ TSP\ removed$$

3. Wet suppression (chemical) for sources 1, 2, 3, 4
Same as for primary crushing

5 Cleaning

No control required -generally a wet process operation and performed in a building

6 Storage

A. Loading onto piles

1. Enclosure (stone ladder)

Control efficiency = 80% MRI, p. 6-6
Capital cost (1977 $) = 20,000

$$\$20{,}000 \left(\frac{249.6}{204.1}\right) \approx \$24{,}000$$

Annualized cost (@ 17% of capital cost)
$24,00 (0.17) = $4,000

$$C/B = \frac{\$4{,}000/yr}{(0.08\ lb/ton)(3{,}000{,}000\ tpy)(.80)}$$
$$= \$0.02/lb\ TSP\ removed$$

2. Telescopic chutes

Control efficiency = 75% MRI, p. 6-6
Capital cost (1977 $) = 7,000

$$\$7{,}000 \left(\frac{249.6}{204.1}\right) = \$8{,}600$$

Annualized cost (@ 17% of capital cost)

$$\$8{,}600\ (.17) = \$1{,}500$$

$$C/B = \frac{\$1{,}500/yr}{(.75)(3{,}000{,}000\ tpy)(.08\ lb/ton)}$$
$$= \$0.01/lb\ TSP\ removed$$

3. Wet suppression (chemical)

Control efficiency = 75% MRI, p. 6-6
Capital cost (1977 $) = $60,000

$$\$60{,}000 \left(\frac{249.6}{204.1}\right) = \$73{,}000$$

Annualized cost = $29,400

$$\$29{,}400 \left(\frac{249.6}{204.1}\right) = \$36{,}000\ \text{NMI, p. 4-11}$$

$$C/B = \frac{\$36{,}000/yr}{(3{,}000{,}000\ tpy)(.75)(.08\ lb/ton)}$$
$$= \$0.20/lb\ TSP\ removed$$

4. Wind guards

Control efficiency = 50% MRI, p. 6-6
Capital cost (1977 $) = $50,000

$$\$50{,}000 \left(\frac{249.6}{204.1}\right) = \$61{,}100$$

Annualized cost (@ 20% of capital costs for maintenance and capital charges)

$$(.2)(61{,}000) = \$12{,}000$$

$$C/B = \frac{\$12{,}000/yr}{(3{,}000{,}000\ tpy)(.5)(.08\ lb/ton)}$$
$$= \$0.10/lb\ TSP\ removed$$

B. Wind erosion

1. Enclosures

Control efficiency = 100% MRI, p. 6-6
Capital cost
($60/ton stored)(3,000,000 tpy)/12 months/yr
= $15,000,000

Annualized costs ($ 17%) =
($15,000,000)(.17) = $2,550,000

$$C/B = \frac{\$2,550,000/yr}{(3,000,000\ tpy)(.09\ lb/ton)}$$

= $9.44/lb TSP removed

2. Wet suppression (chemical)

Control efficiency = 99% MRI, p. 6-6
Capital cost (1977 $) = $11,000

$$\$11,000 \frac{(249.6)}{(204.1)} = \$13,450$$

Annualized cost: (250,000 tons storage)
250,000 tons (40 ft^3/ton)(100 ft height)
= 100,000 ft^2

$$[\$(\frac{.004 + .1}{2})/ft^2](100,000\ ft^2) = \$5,200$$

$$\$5,200 \frac{(249.6)}{(204.1)} = \$6,400$$

$$C/B = \frac{\$6,400/yr}{(0.09\ lb/ton)(3,000,000\ tpy)(.99)}$$

= $0.02/lb TSP removed

C. Loading out

1. Under pile conveyor

Control efficiency = 80% TG, p. 2-39
Capital cost (1977 $)

($47.5/ton)(250,000 tons) = $11,875,000

$$\$11{,}875{,}000 \left(\frac{249.6}{204.1}\right) = \$14{,}520{,}000$$

Annualized cost (@ 20%)
(0.2)(14,520,000) = $2,900,000

$$C/B = \frac{\$2{,}900{,}000/\text{yr}}{(.8)(.1\ \text{lb/ton})(3{,}000{,}000\ \text{tpy})}$$

= $12.08/lb TSP removed

2. Wet suppression (chemical)

Control efficiency = 95% MRI, p. 6-6
Capital cost (1977 $) = $60,000

$$\$60{,}000 \left(\frac{249.6}{204.1}\right) = \$73{,}400$$

Annualized cost = $29,400 NMI, p. 4-11

$$\$29{,}400 \left(\frac{249.6}{204.1}\right) = \$36{,}000$$

$$C/B = \frac{\$36{,}000/\text{yr}}{(3{,}000{,}000\ \text{tpy})(.95)(.1\ \text{lb/ton})}$$

= $0.13/lb TSP removed

3. Bucket wheel reclaimer

Control efficiency = 80% MRI, p. 6-6
Capital cost (1977 $) = $5,300,000

$$\$5{,}300{,}000 \left(\frac{249.6}{204.1}\right) = \$6{,}480{,}000$$

Annualized cost (@ 20% of capital cost)
(.2)(6,480,000) = $1,300,000

$$C/B = \frac{\$1{,}300{,}000/\text{yr}}{(3{,}000{,}000\ \text{tpy})(.8)(.1\ \text{lb/ton})}$$

= $5.42

7 Loading

A. Truck loading

1. Wet suppression (chemical)

Control efficiency = 80% MRI, p. 6-6
Capital cost = $73,000

Annualized cost = $36,000

$$C/B = \frac{\$36,000/yr}{(3,000,000\ tpy)(.80)(.02\ lb/ton)}$$

= $0.75/lb TSP removed

2. Telescopic chutes

Control efficiency = 75% MRI, p. 6-6
Capital cost = $8,600

Annualized cost = $1,500

$$C/B = \frac{\$1,500/yr}{(3,000,000\ tpy)(.75)(.02\ lb/ton)}$$

= $0.03/lb TSP removed

B. Rail car or barge loading

1. Wet suppression (chemical)

Control efficiency = 80% MRI, p. 6-6
Capital cost = $73,000

Annualized cost = $36,000

$$C/B = \frac{\$36,000/yr}{(3,000,000\ tpy)(.8)(.4\ lb/ton)}$$

= $0.04/lb TSP removed

2. Telescopic chutes

Control efficiency = 75% MRI, p. 6-6
Capital cost = $8,600

Annualized cost = $1,500

$$C/B = \frac{\$1,500/yr}{(3,000,000\ tpy)(.75)(.4\ lb/ton)}$$

= <$0.01/lb TSP removed

2.20 BRICK AND RELATED CLAY PRODUCT MANUFACTURING PLANTS

2.20.1 Process Description

The manufacturing plants which produce brick and related clay products such as clay pipe, pottery, and refractory brick (this category does not include ceramic clay manufacturing) usually employ grinding, screening, blending, forming, cutting, drying and firing operations to produce a final product. The basic raw material used in this industry is clay.

Clay is composed of extremely fine crystals or particles of hydrated silicates of aluminum, iron or magnesium with various impurities which include powdered feldspar, quartz, sand, limestone and carbonaceous materials such as coal and pyrities.[1] The unique (and most desirable) properties of clay are that it is plastic when sufficiently pulverized and wetted, rigid when dry, and vitreous when fired at a sufficiently high temperature.[2] Surface clays and shales are mined in open pits while most fine clays are found underground.[3] In general, the industry will use clays that have enough plasticity to be workable, contain a low water of plasticity, exhibit limited dry shrinkage in terms of size and mass, and have limited firing shrinkage.[4]

There are three major technological processes which can be used to manufacture brick or related clay products: the soft-mud process, the stiff-mud process and the dry (or semi-dry) press process.

In the soft-mud process, the clay mixture contains 20 to 30 percent water, and the desired product is formed in molds.[5] This process is particularly suitable for producing bricks from sandy clays that do not extrude well. One disadvantage associated with this process concerns the cost of drying the water from these bricks. Since the clay has a high water content, the drying costs associated with this process will accordingly be higher than those for the stiff-mud and dry press processes.

The stiff-mud process uses clay that has enough water content (15 to 20 percent) to be reasonably workable and has normal drying characteristics. This clay mixture is placed in a screw-type extruder and forced through a die. The extruded clay bar, rectangular in shape, is then cut into the finished product, dried and fired in a kiln.[6] The stiff-mud (or extrusion) process is the predominant method of producing brick and clay products in the United States.

Finally, in the dry (or semi-dry) press process, a clay mixture (4 to 7 percent water) is placed in molds and subjected to extremely high pressures (approximately 5 tons per square inch), and then fired in a kiln.[7] Although the brick or ware produced in this manner is taken directly to the kiln for firing without the intermediary drying process[8], large amounts of energy may still be needed to initially predry the clay so that it can be subjected to the pressing process.

Regardless of which clay process is used, the raw material is subjected to the same grinding, screening and blending processes in order to obtain the specified size and composition. Some plants, however, will eliminate the grinding and screening processes by purchasing finished raw materials. In all other instances, the clay arrives at the plant from a clay mine and is subjected to preliminary crushing.

The crusher normally used for grinding is a pan crusher which consists of one or more grinding wheels or mullers revolving in a pan. The pan may remain stationary while the mullers are driven, or the pan may be driven while the mullers revolve by friction.[9]

Next, the clay is transferred to sizing screens. The proper sized clay particles pass through the screens and are subsequently conveyed to large storage bins. The oversized material from the screens are fed into a hammermill, reduced in size and recycled to the inlet of the screens.

From the storage bins, the clay is supplied to the mixing machines by use of either vibratory feeders or rotary disc-feeders. In the mixing machine (usually a pugmill), water and additives are added.

After mixing, the clay material is formed by means of either the soft-mud, stiff-mud or dry press process. The products of the soft-mud and stiff-mud processes are usually placed in drying rooms before firing in a kiln. In these drying rooms, the drying process is accomplished partially by using waste heat from the kilns.[10] The products of the dry press process go directly into the kilns.

The final step in the production process is the firing of the brick or ware in a kiln. Although several types of kilns are in use today, practically all modern brick and tile plants use a tunnel kiln to fire their ware.[11]

In the operation of a tunnel kiln, the brick or ware moves continuously on cars through the kiln as indicated in Figure 2.20-1.[12] As the ware moves, it is gradually heated, reaching a maximum temperature in the area between the furnaces. The charge is then cooled as it passes out of the kiln. Air is passed through the kiln countercurrent to the direction of movement of the ware. Cold air is forced in the discharge end of the kiln to cool the charge. Some air is withdrawn from this section for use as the primary air for combustion in the burners. The temperatures of the air exiting the kiln range from 320 to 640°F depending upon the length of the preheating zone.

The capacities of tunnel kilns vary from 100 to 250 tons/day.[13]

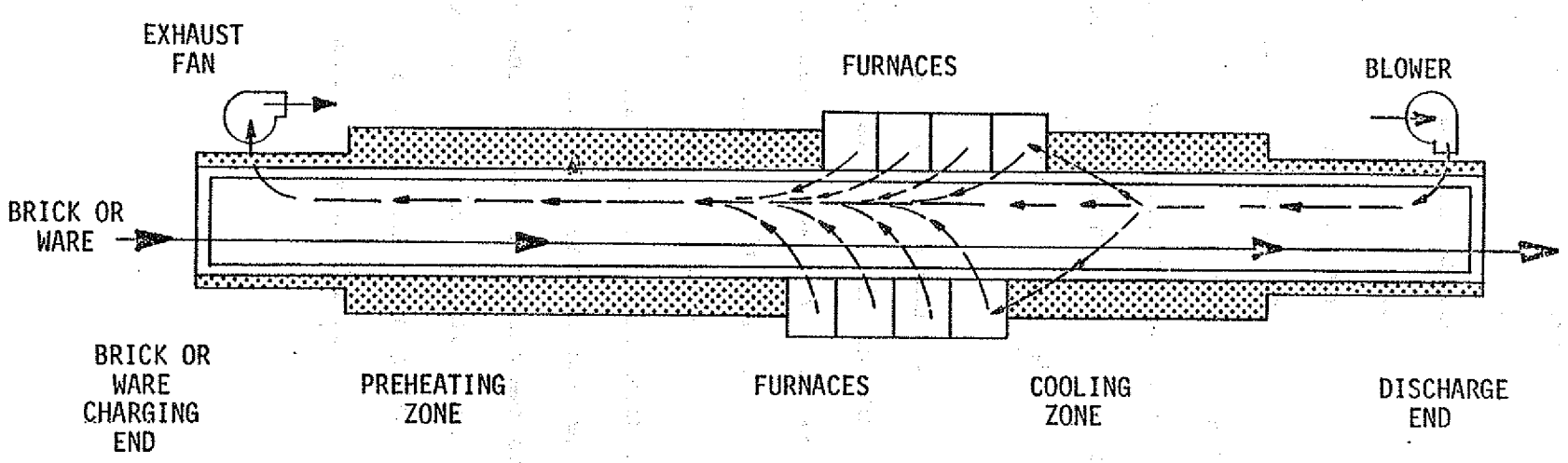

Figure 2.20-1. Tunnel kiln.

The other type of kiln is the periodic (batch) or beehive kiln. In the periodic kiln, as shown in Figure 2.20-2, fires are built in furnaces (B) and heat passes through openings (S) up to the dome of the kiln. The hot gases are deflected downward through the ware, through the flue covers (A) and the under-floor flues (F), into the chimney flue (D), and out the chimney (C).

In all kilns, the firing process subjects the brick or ware to six changes:[14]

1) the chemically uncombined water is driven off;
2) the clay undergoes decomposition along with liberation of the combined water;
3) the combustion and removal of combustible matter occurs;
4) decomposition of impurities occurs,
5) partial combination of some of the impurities with the silica and alumina from the clay occurs, and a molten glassy material is formed; and
6) upon cooling, the glassy material bonds the solid particles together, forming a tough, hard product.

The temperature of the ware is raised slowly to allow the water and products of combustion to escape without damaging the structure of the ware. The temperature (maximum temperature ≈ 2000°F) of the kiln and the length of time the ware is fired determines the amount of glassy material formed.

At brick and related clay products manufacturing plants, the sources of fugitive dust emissions include raw material unloading, primary crushing, and vehicular traffic on plant roadways. The secondary crushing or grinding and screening processes are usually conducted indoors to prevent exposure to moisture; and, therefore, are not sources of fugitive dust emissions. The fugitive dust sources and a process flow diagram are shown in Figure 2.20-3.

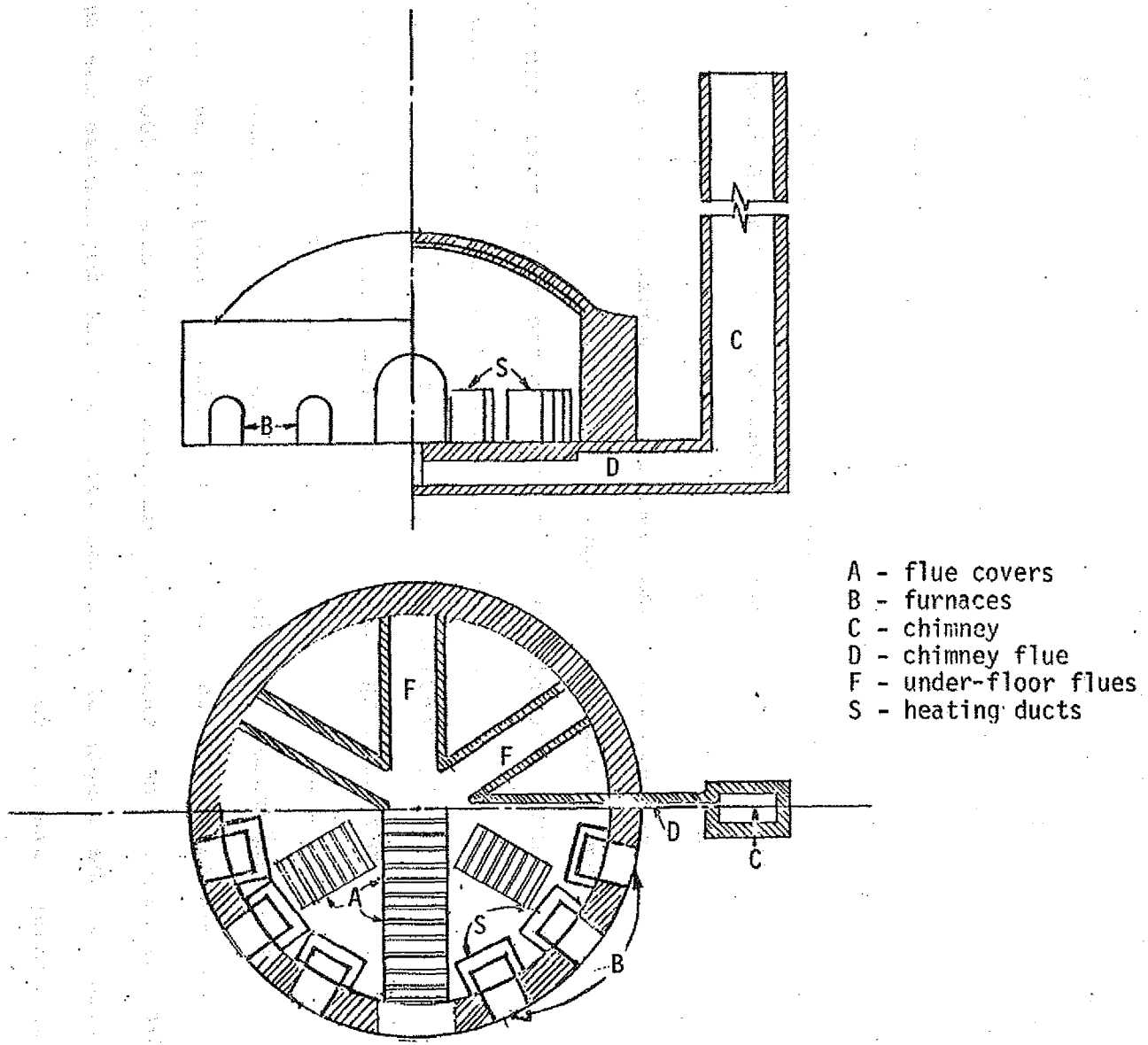

Figure 2.20-2. Periodic kiln.

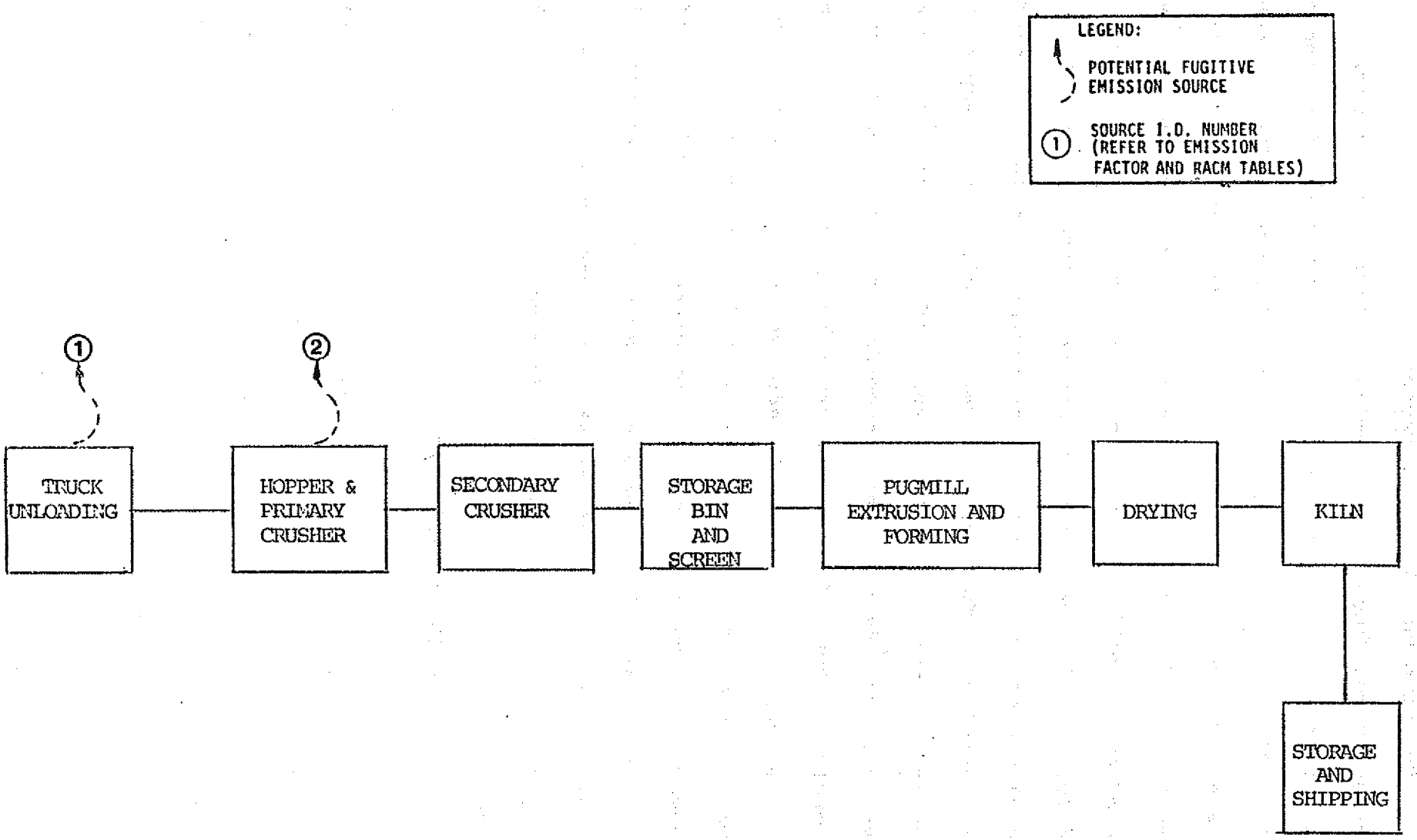

Figure 2.20-3. Simplified process flow diagram for brick and related clay product manufacturing plants and associated fugitive particulate emission sources.

2.20-2 Fugitive Dust Emission Factors

The estimated fugitive dust emission factors for sources at brick and related clay manufacturing plants are identified and summarized in Table 2.20-1. The source of the cited factors is EPA's "Technical Guidance for Control of Industrial Process Fugitive Particulate Emissions". The factors given are based upon engineering estimates and are of questionable accuracy for site specific applications.

No fugitive dust emission factors were found for any other individual process operations such as screening, material transfer or secondary grinding. The major sources of fugitive dust appear to be truck unloading, primary crushing, and traffic on plant haul roads. In those instances where storage, secondary crushing and screening are conducted without adequate enclosure and visible emissions are apparent, measures will have to be adopted to either further enclose such operations or otherwise control such fugitive emissions. In Ohio, however, the majority of these processes are conducted indoors, where little, if any, dust generated escapes into the ambient air.

Since both material handling and haul roads were discussed in detail in Section 2.1, they will be addressed only briefly in this guideline.

2.20.3 Particle Characterization

Chemically, clays are hydrated silicates of aluminum, iron and magnesium with various impurities. The toxicity depends upon the silica (SiO_2) content of the clay. Clay (usually $Al_2O_3.SiO_2.2H_2O$) has a molecular weight of 258.2 grams/mole, is insoluble in water, and can be toxic if it is inhaled at high concentrations over a prolonged period.[16]

TABLE 2.20-1. FUGITIVE DUST EMISSION FACTORS FOR BRICK AND RELATED CLAY PRODUCT MANUFACTURING PLANTS

Source	Emission factor	Reliability rating	Reference
1 Truck unloading	0.04 lb/ton unloaded	E	22
2 Primary crushing	0.25 lb/ton crushed	E	22

A study conducted by the National Institute for Occupational Safety and Health determined that exposure to respirable free silica was toxic at the concentrations found to exist at a Boulder, Colorado brick manufacturer.[16] A TLV of 30 million particles per cubic foot has been determined for clay.[17]

No particle size distribution data could be found for the identified fugitive dust emissions.

2.20.4 Control Alternatives

Fugitive dust emissions generated by truck unloading and primary crushing can be abated through the application of chemical dust suppressants, enclosure with aspiration to a fabric filter or partial enclosure using a three-sided building.

A typical wet dust suppression system contains the following components: a dust control agent, metering equipment, a distribution system, and control actuators.[18] The dust suppressant should be applied during the unloading operation by use of a spray bar located above the dump hopper. This will reduce the visible dust emissions generated during the dumping operation and subsequent crushing. While no measurements have been made to test the efficiency of this process, it is reported to be about 90 percent efficient.[19]

The fugitive dust may also be captured by a hood or duct located above the unloading area which is aspirated to a fabric filter dust collector.

Lastly, a three-sided enclosure over the truck dumping and crushing area can be an effective measure to reduce the amount of fugitive dust emitted. Many brick and clay product plants employ such a structure over this area, although not generally for purposes of air pollution control.

Although, as previously mentioned, storage, secondary crushing and screening operations are generally conducted indoors with little, if any, discharge of fugitive emissions, adequate control measures such as improving existing enclosures, installing new enclosures, wet suppression devices or other controls may be necessary if the existing facilities are unable to adequately contain the fugitive dust emissions.

Roadways and parking areas on plant property can be a significant sources of fugitive emissions depending upon the type of road surfaces.[21] Road surfaces are separated into two general categories: paved and unpaved. Generally speaking, for paved surfaces, sweeping, flushing, speed reduction and good housekeeping practices are typical methods of control. Dust suppressants, road oiling, paving or vehicular speed reduction are the typical methods cited for the control of fugitive emissions from unpaved roadways.

2.20.5 Recommended Reasonably Available Control Measures (RACM)

The RACM selections for control of fugitive particulate emissions from brick and related clay product manufacturing plants are presented in Table 2.20-2. Recommended control for raw material unloading and primary crushing is the use of a chemical dust suppression system. This system provides good control effectiveness (90 percent) and reduces visible emissions significantly. Recommended control measures for the storage and/or secondary screening and grinding operations located at facilities without adequate enclosures (i.e., visible emissions noted through building openings) will be to either further enclose such operations or install controls (such as wet suppression).

RACM for the control of fugitive dust from roadways are discussed in Section 2.1.1 of this guideline document.

TABLE 2.20-2. A SUMMARY OF THE CONTROL ALTERNATIVES, EFFICIENCIES AND COSTS, AND THE RACM SELECTIONS FOR FUGITIVE DUST EMISSIONS FROM BRICK AND RELATED CLAY PRODUCT MANUFACTURING PLANTS

Fugitive dust sources	Control alternatives	Control efficiency %	Control costs, Jan. 1980, $		Cost benefit	RACM selection
			Capital	Annualized	$/lb	
(1) Truck unloading	Three-sided enclosure	50[a]	4,900[b]	800[b]	.04	Wet suppression (chemical)
	Wet suppression (chemical)	95[c]	64,000[d]	15,700[d]	.38	
	Enclosure, vent to fabric filter	99[c]	87,400[e]	21,000[e]	.49	
(2) Primary crusher	Three-sided enclosure	50[a]	f	f	.04	Wet suppression (chemical)
	Enclosure, vent to fabric filter	99[c]	g	g	.49	
	Wet suppression (chemical)	95[c]	h	h	.38	

[a] Estimate.

[b] Assume 20'x20'x15' enclosure. Based on 75 ton/hr throughput of clay and 250 days per year operation.

[c] No visible emissions after controls. Based on data from Section 2.13 of this guideline.

[d] Assume 75 tons/hr throughput capacity, 250 days per year operation, and the spray covering material handling operations. See Section 2.13.

[e] Assume 20'x20'x15' enclosure with jet pulse baghouse treating 10,000 acfm at 70°F with a 6.5 to 1 air to cloth ratio.

[f] The cost includes those for a three-sided enclosure for truck unloading.

[g] The cost includes those for enclosure and vent to fabric filter for truck unloading.

[h] The cost includes those for wet suppression for truck unloading.

REFERENCES FOR SECTION 2.20

1. Kirk-Othmer, Encyclopedia of Chemical Technology, Vol. 6, Third Edition, (New York, 1978), p. 190-192.

2. Ibid.

3. Compilation of Air Pollutant Emission Factors. Third Edition with Supplements 1-9. U.S. Environmental Protection Agency, Office of Air Quality Planning and Standards. Publication No. AP-42. Research Triangle Park, North Carolina, July, 1979, p. 8.3-1.

4. Op. cit. Reference 1. p. 210-212.

5. H.R. Jones, Fine Dust and Particulate Removal (New Jersey, 1972), p. 184.

6. Ibid.

7. Ibid.

8. Air Pollution Control Technology and Costs in Nine Selected Areas. Industrial Gas Cleaning Institute (Stamford, Conn., 1972), PB-222 746, p. 240-244.

9. John Perry, Chemical Engineers' Handbook, (New York, 1963) p. 8-17.

10. Op. cit. Reference 3.

11. Op. cit. Reference 8.

12. Ibid.

13. Ibid.

14. Ibid.

15. Irving Sax, Dangerous Properties of Industrial Materials, (Litton Education Publication, 1979) Fifth Edition, p. 760.

16. Bobby J. Gunter, Health Hazard Evaluation/Toxicity Determination, Colorado Brick Company, Boulder, Colorado, November 1973, Pb-323-567-8.

17. E.R. Plunkett, Handbook on Industrial Toxicology, (New York, 1976) p. 229.

18. PEDCo Environmental, Inc., Control Techniques for the Crushed and Broken Stone Industry, Prepared for USEPA, July, 1979. p. 3-15.

19. Ibid.

20. Technical Guidance for Control of Industrial Process Fugitive Emissions, EPA 450/3-77-010, March 1977 pg. 2-241.

APPENDIX FOR SECTION 2.20

Three sided enclosure

20x20 + 20x15 + 20x20
400 400 300

Total area = 1100 ft^2

Mass = 1100 ft^2 (5.625 lbs/ft^2)(1.2)

Mass = 7425 lbs

Pg. 4-25 GARD Enclosure Cost = (\$.208 + \$.30)(7425 lbs)

Enclosure Cost = \$3,770 labor materials
Dec. 75

Update to Jan. 1980 $(\$3,770)\frac{(249.6)}{(192.1)} = \$4900$

UAE = (4900)(.1598) = 783.02 ≈ 800

Cost benefit

75 tons/hr throughput
2000 hrs/yr operation
150,000 TPY

<u>three-sided enclosure</u> - control efficiency - 50%

EF = .29 lb/ton =

(.29)(150,000) = 43,500 lbs

(.5)(43500) = 21,750

$\frac{800}{21750}$ = \$.036 /lb removed.

<u>Wet suppression</u>

43,500 lbs
(95%)(43,500) = 41,325 lbs

$\frac{15,700}{41,325} = .38$

<u>Enclosure with vent to fabric filter</u>

43,500
(.99)(43,500) = 43,065

$\frac{21,000}{43,065} = .49$

2.21 ASPHALTIC CONCRETE PLANTS

2.21.1 Process Description

Asphaltic concrete is manufactured by combining various proportions of fine and coarse aggregates in a mixer with either a hot asphalt or a cold (cutback or emulsified) asphalt.[1] The aggregates are composed of different sizes of sand and gravel which are highly siliceous with quartzose grains.[2]

There are three different types of hot mix asphaltic concrete plants: batch, continuous and dryer-drum. The batch and continuous processes differ only in the final mixing process (i.e., both have basically the same pattern of material flow up to that point).[3]

In the batch plant, the aggregate is loaded onto the feeder and conveyed to a rotary dryer. After drying, the material is sized, weighed and loaded into the mixer.[4] The hot asphalt is weighed separately and then placed into the mixer where the aggregate becomes evenly coated with asphalt.[5]

In the continuous process, the sized and proportioned aggregate is conveyed to the mixer. A positive displacement metering pump automatically meters the correct amount of asphalt and thoroughly mixes the material in the pugmill. The aggregate and asphalt feeds are positively interlocked to insure that proper proportions of each material are introduced into the mixer. The retention time in the mixer is controlled by an adjustable dam located at the discharge point.[6]

Simplified process flow diagrams of typical continuous and batch plants are shown in Figures 2.21-1 and 2.21-2, respectively.

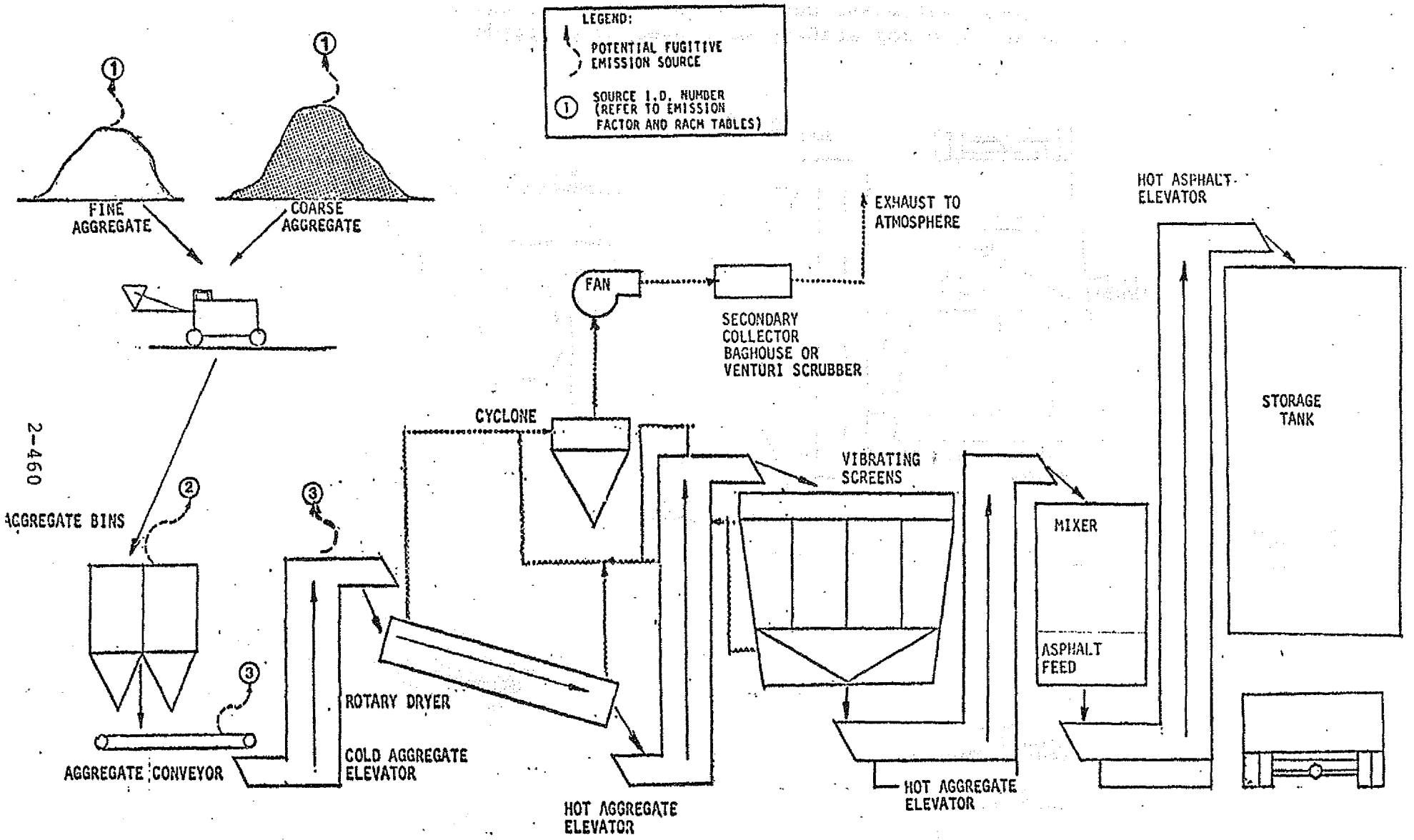

Figure 2.21-1. Simplified process flow diagram for a continuous hot-mix asphaltic concrete plant and associated fugitive particulate emission sources.

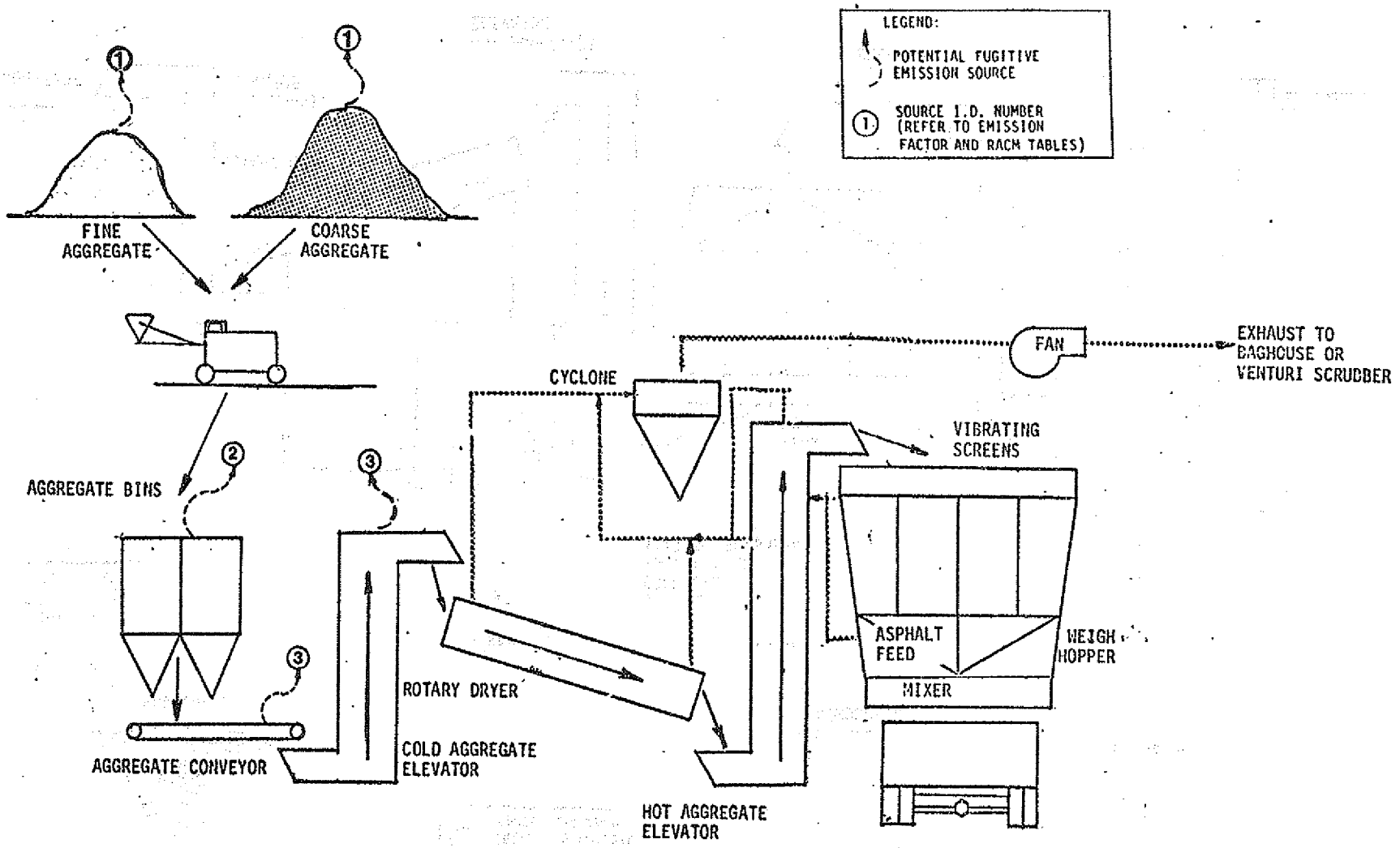

Figure 2.21-2. Simplified process flow diagram for a batch hot-mix asphaltic concrete plant and associated fugitive particulate emission sources.

In the dryer-drum process, the proportioned aggregates are fed to a continuous belt, weighing unit which in turn feeds the dryer-drum.[7] At the same time, an adequate amount of hot asphalt is continously injected directly into the dryer-drum to coat the aggregates.[8] In the dryer-drum, the asphalt/aggregate mixture is dried to form the desired asphaltic concrete product. This process eliminates the hot screens, feeder bins, and elevators that are used in both the batch and continuous processes.[9] A process flow diagram of a typical dryer-drum plant is shown in Figure 2.21-3.

One process for manufacturing cold-patch asphaltic concrete utilizes a "cutback" asphalt which contains solvents and oils that will give better aggregate coating properties and extended curing times.[10] Cold-patch asphaltic concrete can be made in either a batch or continuous process. The operating measures for the production of cold-patch asphaltic concrete are similar to those for hot-mix asphaltic concrete except that the dryer for the cold-patch process is operated at lower temperatures.[11]

In another process for manufacturing cold-patch asphaltic concrete, an emulsifying agent and water are substituted for the petroleum distillate and oils used in the cutback process.[12] This emulsion is then mixed with aggregate to form cold-patch asphaltic concrete. There are no process or equipment changes associated with the use of emulsified asphalt over the cutback process.[13] The major advantage to the use of emulsified asphalt is that it greatly reduces the amount of volatile organic compound emissions that are released through evaporation of distillate in the curing process since no petroleum distillates are used for making the diluent.[14]

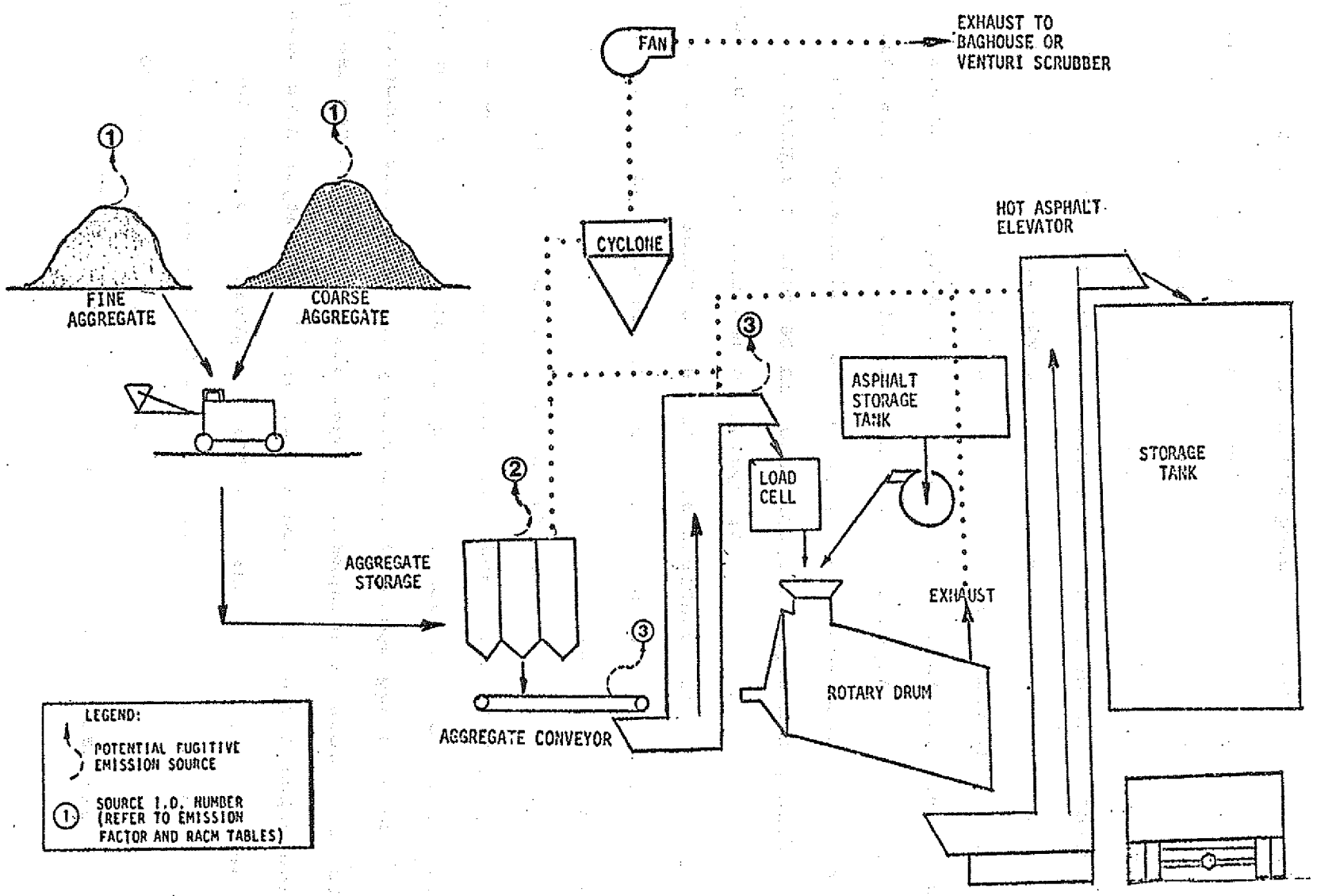

Figure 2.21-3. Simplified process flow diagram for a dryer-drum asphaltic concrete manufacturing plant and associated fugitive particulate emission sources.

The capacities of asphaltic concrete plants range from 50 to 350 tons per hour with an average capacity of 163 tons per hour.[15] Typically, asphaltic concrete plants fall into two general categories: those that produce less than 100,000 tons per year and those that produce more than 390,000 tons per year.[16]

At asphaltic concrete plants, the major sources of fugitive dust are roadways, aggregate storage piles, and aggregate handling operations. The hot aggregate elevators, their transfer points and the vibrating screens are not considered to be sources of fugitive dust emissions, because these areas are always enclosed and vented to the dust collector for the rotary dryer.[17] Therefore, the above-mentioned enclosed areas will be considered as a part of the "point source" emissions. The emissions resulting from roadways and mineral extraction from quarry pits are discussed in Sections 2.1 and 2.18 of this study.

2.21.2 Fugitive Emission Factors

The uncontrolled fugitive emission factors for the production of asphaltic concrete are presented in Table 2.21-1. The factors vary depending upon the type of operation involved[18] and the composition of the dried aggregate.[19]

The emission factors for the storage of coarse and fine aggregates are derived and discussed in Section 2.1.2 of these guidelines. The emission factors for material transfer operations were obtained from a document entitled "Assessment of Fugitive Particulate Emission Factors for Industrial Processes" (EPA-450/3-78-107), and are based upon similiar material processes in other industries.[20]

The reliability of the fugitive dust emission factors given in Table 2.21-1 have a "D" rating, which means that the factors are based upon engineering judgment and supported by limited test data.[21,22]

TABLE 2.21-1 FUGITIVE DUST EMISSION FACTORS FOR ASPHALTIC CONCRETE MANUFACTURING

Source	Emission factor	Reliability rating	Reference
(1) Storage of coarse and fine aggregate			
loading onto pile	0.04 lb/ton loaded onto pile	D	40
vehicular traffic	0.013 lb/ton stored	D	40
load out	0.05 lb/ton stored	D	40
wind erosion	0.11 lb/ton stored	D	40
(2) Unloading coarse and fine aggregate to storage bins	0.1 lb/ton loaded out	D	40
(3) Cold aggregate elevator	0.5 lb/ton aggregate	D	40

2.21.3 Particle Characterization

Studies indicate that the fugitive dust particles from asphaltic concrete plants range from 0.1 μm to more than 300 μm,[23] with about 90 percent of the particles less than 10 μm in size.[24] The exact size distribution of the fugitive dust will depend upon the amounts of coarse and fine aggregates used in the asphaltic concrete mix.[25]

The chemical composition of the fugitive dust will vary with the type of aggregate used. Aggregate usually consists of rock, gravel, sand, fines[26] or waste materials such as slag from steel mills and crushed glass.[27] The primary compound found in sand, gravel or glass is silica (SiO_2) or stone quartz. Sand and gravel will contain varying amounts of silica and impurities such as feldspar, mica, limomite and other iron oxides and minerals.[28] Asphalt sand (or gravel) is usually a clean siliceous sand of medium grain and sharpness used for the manufacture of asphalt pavement.[29]

Silica in its pure form is a crystal with a molecular weight of 60.09 grams/gram-mole, a melting point of 1710°C, a boiling point of 2230°C and a vapor pressure of 10 mm of Hg at 1732°C.[30] The prolonged breathing of silica is the chief cause of pulmonary dust disease or silicosis.[31] This disease is characterized by generalized fibrotic changes and the development of miliary nodules in the lungs.[32] As the disease progresses, it substantially impairs breathing capacity and leaves the victim susceptible to tuberculosis, cardiac failure or anoxemia (lack of oxygen) as a result of the destruction of lung tissue.[33]

The major compounds found in slag from steel mills are calcium oxide, magnesium oxide and silica.[34] Calcium oxide (CaO) has a melting point of 2580°C and a density of 3.37 grams/cm^3. It is a powerful caustic to living tissue.[35] Magnesium oxide (MgO) in its pure form has a melting point of 2500°C and a density of 3.65 grams/cm^3. When inhaled it can produce a febrilercation (fever) or leukocytosis (an increase in white blood cells).[36]

2.21.4 Control Methods

The largest potential source of fugitive emissions within the industry results from existing aggregate storage piles and plant roadways.

The control techniques utilized for reducing emissions from aggregate storage piles include the use of enclosures, wind screens, the application of water and/or chemicals and reasonable operating precautions.[37] While total enclosure of the aggregate storage pile is the most effective method of preventing fugitive emissions, it is also the most expensive. Wind screens are an alternative to total enclosure, but they are not as efficient. The use of water and/or chemicals for dust suppression is the most common measure for the control of fugitive emissions.

Roadways and parking areas on plant property can be a significant source of fugitive emissions depending upon the amount of traffic and the type of road surface.[38] Road surfaces are separated into two general categories: paved and unpaved. Generally speaking, for paved surfaces, sweeping, flushing, vehicular speed reduction and good housekeeping practices are typical methods of control. Dust supressants, road oiling, paving or vehicular speed reduction are the typical methods cited for the control of fugitive emissions from unpaved roadways.

The aggregate handling operations involving the removal of aggregate from the storage site and its subsequent transfer to the process operation are generally accomplished by use of a front end loader. The fugitive emissions that result from this phase of the operation are due to spillage and emissions resulting from unloading which are simultaneously compounded by wind generated losses. The control methods that are employed include reasonable care in handling to avoid spillage, the use of enclosures or wind guards wherever possible and the use of wet suppression at the cold storage bins.

The control methods discussed above in reference to aggregate storage piles, roadways and material handling are discussed in detail in Sections 2.1.1, 2.1.2 and 2.1.3 of this document.

2.21.5 Recommended Reasonable Available Control Measures (RACM)

Control for storage piles commonly consists of wet suppression (water or chemical) in the form of a sprinkling system plus a partial enclosure (or wind break). See Section 2.1.2 for a detailed discussion.

The dusting that occurs while loading the aggregate into the cold storage bins is minimized by use of a sprinkling system located at the cold bin.[39] Fugitive dust emissions from loading operations can also be reduced somewhat by lowering load-in drop distances.

For paved roadways the recommended control measure is use of water flushing supplemented by a good housekeeping program to minimize spills and carry-on dirt and mud. For unpaved roads, RACM is the use of oil or other dust suppressants coupled with general speed reduction. Paving is justified only where it would be economical to the individual plant. See Section 2.1.1 for detailed discussion.

REFERENCES FOR SECTION 2.21

1. Technical Guidance for Control of Industrial Process Fugitive Particulate Emissions. PEDCo Environmental, Inc. Prepared for U.S. Environmental Protection Agency, Research Triangle Park, North Carolina. EPA-450/3-77-010. March 1977, page 2-323.

2. Ladoo, R.B., and Meyers, W.M., Non-metallic Minerals. 2nd Ed. McGraw Hill Book Co., Inc. 1951, p. 453.

3. Op. cit. Reference 1. p. 2-323.

4. Ibid.

5. Ibid.

6. Ibid.

7. Kinsey, S.J., An Evaluation of Control Systems and Mass Emission Rates From Dryer-Drum Hot Asphalt Plants. Journal of The Air Pollution Control Association (Dec. 1976) 26:1163.

8. Ibid.

9. Ibid. p. 1164.

10. Asphalt Concrete Plants, USEPA, EPA 340/1-76-003 March, 1976, p. 15.

11. Ibid.

12. Control of Volatile Organic Compounds From Use of Cutback Asphalt. USEPA, Office of Air Quality Planning and Standards, Research Triangle Park, North Carolina, October 17, 1977. p. 2-2.

13. Ibid.

14. Ibid. p. 1-2.

15. Op. cit. Reference 1.

16. Ohio EPA files.

17. Compilation of Air Pollutant Emission Factors Supplements Nos. 1-8. U.S. Environmental Protection Agency, Office of Air and Waste Management and Office of Air Quality Planning and Standards. Research Triangle Park, North Carolina. August 1977. 8.1 p. 2, 3.

18. Op. cit. Reference 1. p. 2-325, 326.

19. Op. cit. Reference 9. p. 1164.

20. Assessment of Fugitive Particulate Emission Factors For Industrial Processes. PEDCo Environmental, Inc. Prepared for USEPA, Research Triangle Park, North Carolina. EPA 450/3-78-107, p. 2-120.

21. Op. cit. Reference 1. p. 2-2.

22. Op. cit. Reference 16. p. 1-2.

23. Op. cit. Reference 1. p. 2-327.

24. Field Operations and Enforcement Manual for Air Pollution Control. Volume III, Pacific Environmental Services, Inc. Prepared for the USEPA, Research Triangle Park, N.C. APTD-1102:7.18.8 1972.

25. Op. cit. Reference 13. 8.1 p. 5.

26. Op. cit. Reference 21. p. 7.18.

27. Op. cit. Reference 1. p. 2-322.

28. Op. cit. Reference 2. p. 453, 454.

29. Ibid. p. 455.

30. Sax, Irwing W. Dangerous Properties of Industrial Materials, 5th Ed. Van Nostrand Reinhold Co. N.Y., N.Y. 1979, p. 967.

31. Ibid. p. 968.

32. Ibid.

33. Ibid. p. 969.

34. The Making Shaping and Treating of Steel, United States Steel, 9th Ed., Herbick and Held, 1971, p. 340.

35. Op. cit. Reference 27. p. 463.

36. Ibid. p. 783.

37. Reasonably Available Control Measures for Fugitive Dust Sources, PEDCo Environmental Inc., Prepared for Ohio EPA, March 1980 See generally Section 2.1.2.

38. Ibid. Section 2.1.1.

39. Op. cit. Reference 1. p. 328.

40. Technical Guidance for Control of Industrial Process Fugitive Particulate Emissions. PEDCo Environmental, Inc. Prepared for U.S. Environmental Protection Agency, Research Triangle Park, North Carolina. EPA-450/3-77-010. March 1977, p. 2-325.

2.22 CONCRETE BATCHING PLANTS

2.22.1 Process Description[1]

There are three general types of concrete batching plants. They are batching (into transit-mix trucks) plants, central-mix plants and dry-batching (into flat-bed trucks) plants.

Concrete batching plants store, convey, measure and blend the components for making concrete. The plants are similar in the method by which the solid raw materials (sand, aggregate and cement) are received, stored, transferred and blended, but differ with respect to where the water is added to the mix.[2]

The raw materials are delivered to the plant by rail or truck. The cement is transferred pneumatically (most commonly) or by bucket elevator to elevated storage silos. The sand and aggregate are generally stored on the ground and transferred to elevated bins via belt conveyor or bucket elevator. From the overhead bins, the materials are dropped into weigh hoppers which weigh out the proper amount of each material.

In batching plants that load transit-mix trucks, the weighed aggregates and cement are dropped into a receiving hopper. The required amount of water is injected into the flowing stream of solids as the mixture of material is emptied from the receiving hopper into the transit-mix truck. The transit-mix trucks mix the batch en route to the site where the concrete is to be poured.

Dry-batch plants mix sand, aggregate and cement and then dump this dry mix into flat-bed trucks. These trucks transport the batch to paving machines at the job site where water is added and mixing takes place.

A central-mix plant uses a centrally located mixer to make wet concrete. The wet concrete is emptied into open-bed trucks and

transported to the job site where the concrete is to be poured.

A process flow diagram for concrete batching is shown in Figure 2.22-1. One of the fugitive emission sources which is common to all concrete batch plants, but not specifically included in this section, is plant roads. Discussion of this fugitive dust source is presented in Section 2.1. Other fugitive emission sources at concrete batching plants include the sand and aggregate storage areas, transferring and conveying operations, cement unloading, cement silo vents, weigh hopper loading, mixer loading (central-mix plants), transit-mix truck loading operations (batching plants) and flat-bed truck loading operations (dry-batching plants).

2.22.2 Fugitive Dust Emission Factors

The potential sources of fugitive dust from concrete batching are shown in Table 2.22-1, along with the corresponding emission factors. All of these factors are based on either engineering judgment or visual observations. No details are available concerning the methodology of development. The reliability of these types of estimates is poor.

The emission factors for plant haul roads are not included in Table 2.22-1. Emission factors for these sources are listed in Section 2.1.

2.23.3 Particle Characterization

Practically all the fugitive dust generated at concrete batching plants is cement dust since most of the sand and aggregate used is damp. Therefore, this section will only concentrate on particle characteristics of cement dust.

The typical oxide composition of cement dust is as follows.[3]

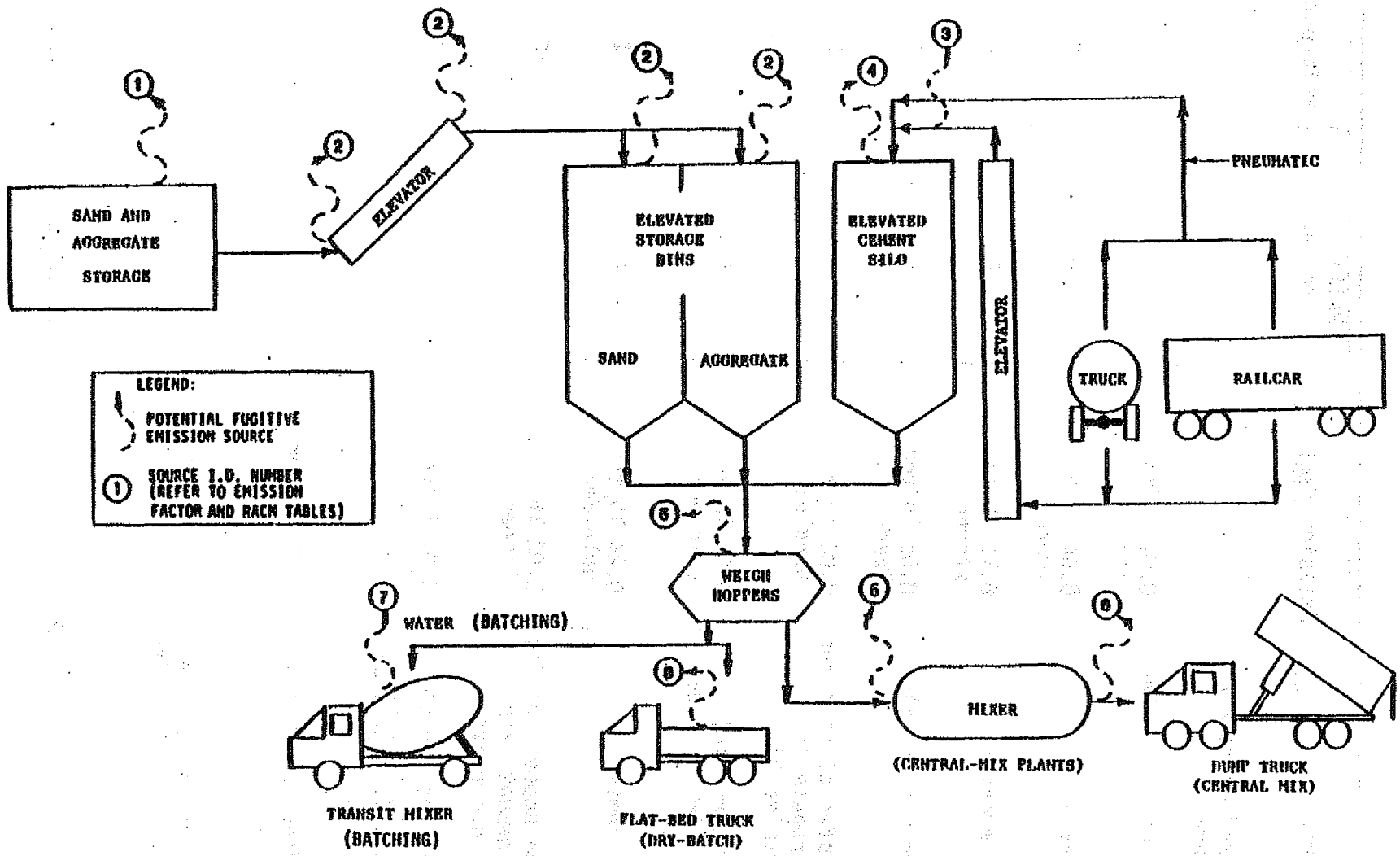

Figure 2.22-1. Simplified process flow diagram for concrete batching and associated fugitive particulate emission sources.

TABLE 2.22-1. FUGITIVE DUST EMISSION FACTORS FOR CONCRETE BATCHING PLANTS

Source	Emission factor	Reliability rating	Reference
(1) Sand and aggregate storage			
loading onto piles	0.04 lb/ton loaded	D	2
vehicular traffic	0.04 lb/ton stored	D	2
wind erosion	0.11 lb/ton stored	D	2
loadout from piles	0.05 lb/ton loaded	D	2
(2) Transfer of sand and aggregate to elevated bins	0.04 lb/ton handled	E	2
(3) Cement unloading to elevated storage silos	0.24 lb/ton unloaded	E	2
(4) Silo vents	0.24 lb/ton unloaded	E	2
(5) Weigh hopper loading of cement, sand and aggregate	0.02 lb/ton loaded	E	2
(6) Mixer loading of cement, sand and aggregate (central-mix plant)	0.04 lb/ton loaded	E	2
(7) Loading of transit-mix truck (batching plant)	0.02 lb/ton	E	2
(8) Loading of flat-bed truck (dry-batching plant)	0.04 lb/ton	E	2

Compound	Fugitive Emission Oxide Composition, Percent By Weight For Cement Dust
Silica	18-23
Al_2O_3	3-8
Fe_2O_3	1-5
CaO	61-66
MgO	0-5
SO_3	2-4
Free Lime	0-2
Minor Compounds	0-1

The American Conference of Governmental Industrial Hygienists has established levels for which airborne chemical compounds could be tolerated without adverse effects on humans.[4] Of the above compounds, aluminum oxide, iron oxide, magnesium oxide and free lime are considered nuisance substances which can be tolerated at relatively high levels. Silica may be hazardous depending upon the amount of quartz contained in the silica. Calcium oxide can be tolerated at levels up to 5 mg/m^3.

Particle size characteristics of the dust vary according to the grades of cement. A range of 10 to 20 percent by weight of particles < 5μm in size is typical for the various grades of cement. Table 2.22-2 summarizes the particle size distribution and bulk density of three common grades of cement.[5]

Table 2.22-2. Physical Characteristics of Three Common Grades of Cement

Characteristic	Weight Percent of Cement		
Particle Size (μm)	Grade I	Grade II	Grade III
0 to 5	13.2	9.6	21.8
5 to 10	15.1	16.6	22.5
10 to 20	25.7	18.8	26.7
20 to 40	29.0	36.6	23.6
40 to 50	7.0	10.4	5.4
50 to 66	5.0	6.0	0
66 to 99	4.0	2.0	0
99 to 250	1.0	0	0
250 (60 mesh)	0	0	0
Bulk Density (lb/ft^3)	54.0	51.5	62.0

2.22.4 Control Methods

This section discusses all available control methods for the fugitive dust emission sources at concrete batching plants.

For the control of fugitive dust emissions from sand and aggregate storage piles, several control methods are available. For loading onto piles, the available control methods are stone ladders, wet suppression (chemical) and telescopic chutes. Loading out operations may be controlled by the use of wet suppression (chemical), watering and underpile conveyors which have a gravity feed to conveyors. For control of wind erosion emissions, the available control methods consist of enclosure (storage bins or silos), wet suppression (chemical) and watering. Lastly, fugitive dust generated by vehicular traffic associated with storage pile activities may be controlled by use of an enclosure, wet suppression (chemical), watering and by using traveling booms rather than vehicles to distribute material.

For control of fugitive dust emissions from plant roadways and parking areas, the reader is referred to Section 2.1.1 of this document.

The amount of fugitive dust generated during the transfer of sand and aggregate from storage to elevated storage bins depends primarily on the surface moisture content of these materials. To ensure that the material is sufficiently moist to prevent dusting, water sprays may be applied at the feed, transfer and discharge points of the belt conveyor or bucket elevator system. To prevent wind losses, most plants partially or completely enclose the conveyor system or use watering and/or chemical dust suppressants.[6] In addition, transfer points may be exhausted to fabric filters for control. Section 2.1.3 and 2.18 further discuss transfer and conveying sources in detail.

A typical cement-receiving and storage system is shown in Figure 2.22-2.[7] The receiving hopper is at or below ground level. If it is designed to fit the canvas discharge tube of the hopper truck, little or no dust is emitted at this point. After a brief, initial puff of dust, the hopper fills completely, and the cement flows from the truck without any free fall.

Cement elevators are either the vertical-screw type or the enclosed-bucket type. Because both are totally enclosed, neither emits any dust if in good condition.[8]

The cement silo must be vented to allow the air displaced by the incoming cement to escape. Unless this vent is filtered, a significant amount of dust escapes. Control can be accomplished by venting to a central dust collecting system or a single collector placed on top of each silo. A fabric type of collector is most often used to vent the cement silo. A fabric "sock", that is placed on each silo vent, can be operated without an exhaust fan when the material is delivered to the silo by bucket elevators because it is simply used to filter the small volume of air that is forced out.[9]

Pneumatic transfer of cement to elevated storage silos from trucks and railcars equipped with compressors and pneumatic delivery tubes is finding increased application over cement transfer by bucket elevator.[10] Pneumatic transfer eliminates emissions between the truck or railcar and the cement silo and requires control only at the cement silo vent by fabric filters. In plants receiving cement pneumatically, use of a fabric "sock" (filtered vent used for the gravity filling of cement) is inadequate.[11]

The volume of conveying air required in the pneumatic delivery system is about 350 cfm to 700 cfm depending on the loading cycle, etc.[12] Since the air is being forced into the silo, the baghouse will require a blower in order to relieve the pressure inside the

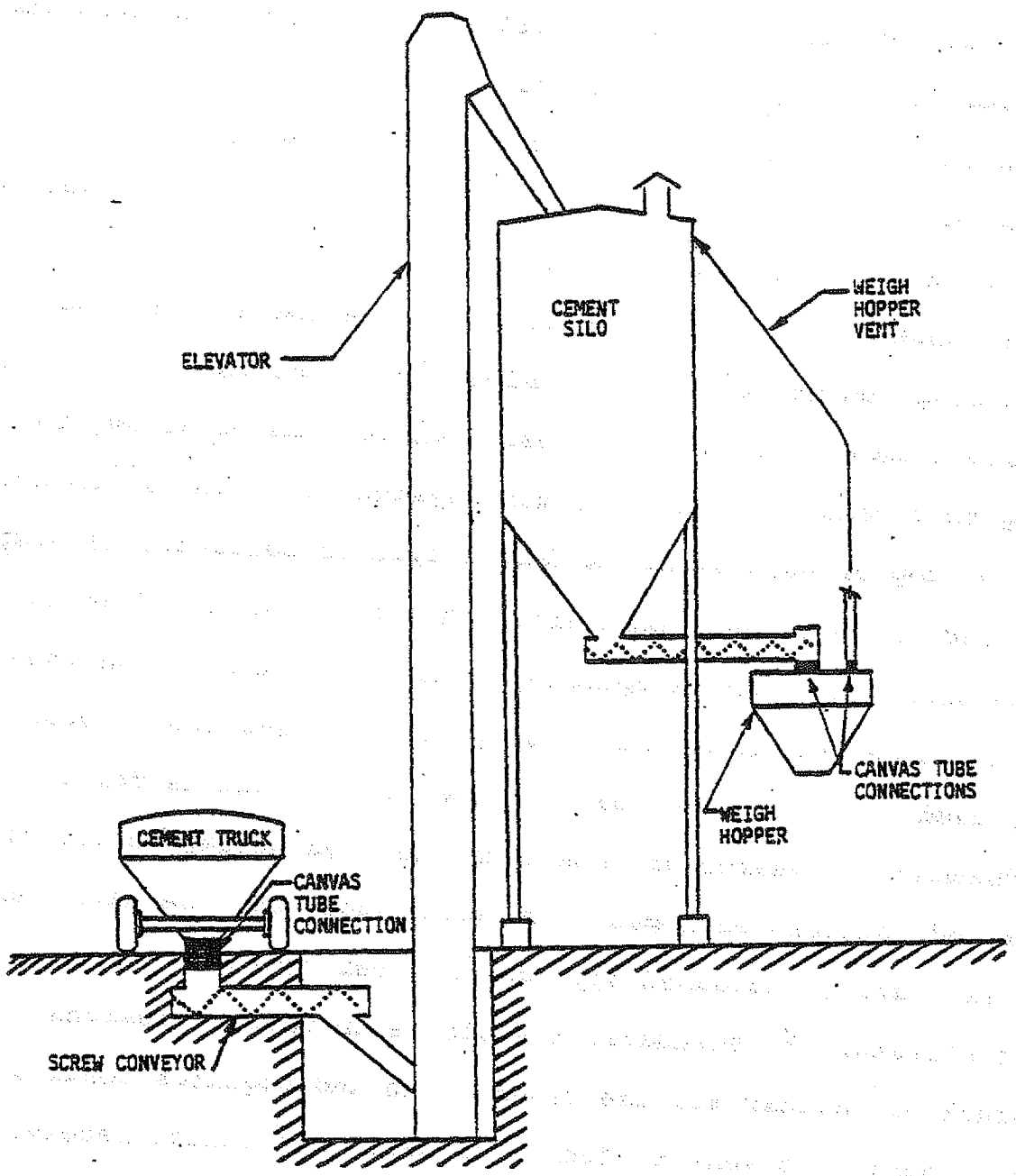

Figure 2.22-2. Cement-receiving and storage system.

silo, and allow flow through the fabric filter. A mechanical shaking mechanism also should be provided to prevent cement from blinding the filter cloth of the baghouse. A vent rate of approximately 1,200 to 1,300 cfm is generally required.[13] The negative pressure created by using a forced draft also prevents dust leakage around access doors and other openings.

Another less expensive type of control measure is to mount a bank of approximately four simple bin vent filters atop the silo. The filtering velocity should not exceed 7 cfm, giving a filter cloth area of approximately 100 square feet for the 700 cfm of air encountered at the end of the cycle. The filter design must include a shaking mechanism to prevent blinding of the filter cloth. The major disadvantage of using a bank of several simple bin vent filters as just described is the possibility of pressure build-up within the silo. If, for some reason, the filter should become blinded, there is a danger of rupturing the silo. Therefore, proper maintenance and regular inspection of the filters are essential.[14]

Where baghouses are used to control other larger cement dust sources as those existing in a dry-batching plant or in a central-mix plant, the cement silo can easily be vented to the same baghouse.[15]

The rapid discharge of sand, aggregate and cement into the weigh hopper generates emissions that may be controlled by venting the displaced air to the individual storage bins and silos or by venting it directly to a central control system.

Fugitive dust occurring from air displaced as dry materials are discharged from the weigh hopper into the mixer at a central-mix plant can be considerable. A mobile hood placed over the outlet of

the discharge end of the mixer coupled with venting to a fabric filter can accomplish effective control. When the mixer is ready to be dumped, this hydraulically operated hood is swung away from the discharge end. For a hood of this type, the indraft face velocity should be approximately 1,000-1,500 ft/min in order to adequately capture the fugitive dust.[16]

At batching plants that load transit-mix trucks, the dropping of a batch from the weigh hopper to the transit mixer can cause cement dust emissions from several points. In the loading of transit-mix trucks, a gathering hopper is usually used to control the flow of materials. Dust can be emitted from the gathering hopper, the truck-receiving hopper and the mixer. The design and location of the gathering hopper can do much to minimize dust emissions. The hopper should make a good fit with the truck-receiving hopper, and its vertical position should be adjustable. Figure 2.22-3 illustrates a design that has been successfully utilized for minimizing these dust emissions.[17] Compressed air cylinders raise and lower the gathering hopper to accommodate trucks of varying heights. A steel plate with a foam rubber backing is attached to the bottom of the gathering hopper and is lowered until it rests on the top of the truck-receiving hopper. Water for the mix is introduced through a jacket around the discharge spout of the gathering hopper and forms a dust-reducing curtain. By discharging the cement hopper into the center of the aggregate stream, and providing choke feed between the weigh hopper and the gathering hopper, dust emissions from the top of the gathering hopper can be minimized. For plants that don't have this type of gathering hopper, an enclosure or a hood vented to a baghouse and made of sheet metal which totally encloses the transit-mix truck-receiving hopper, when in place, may be used.

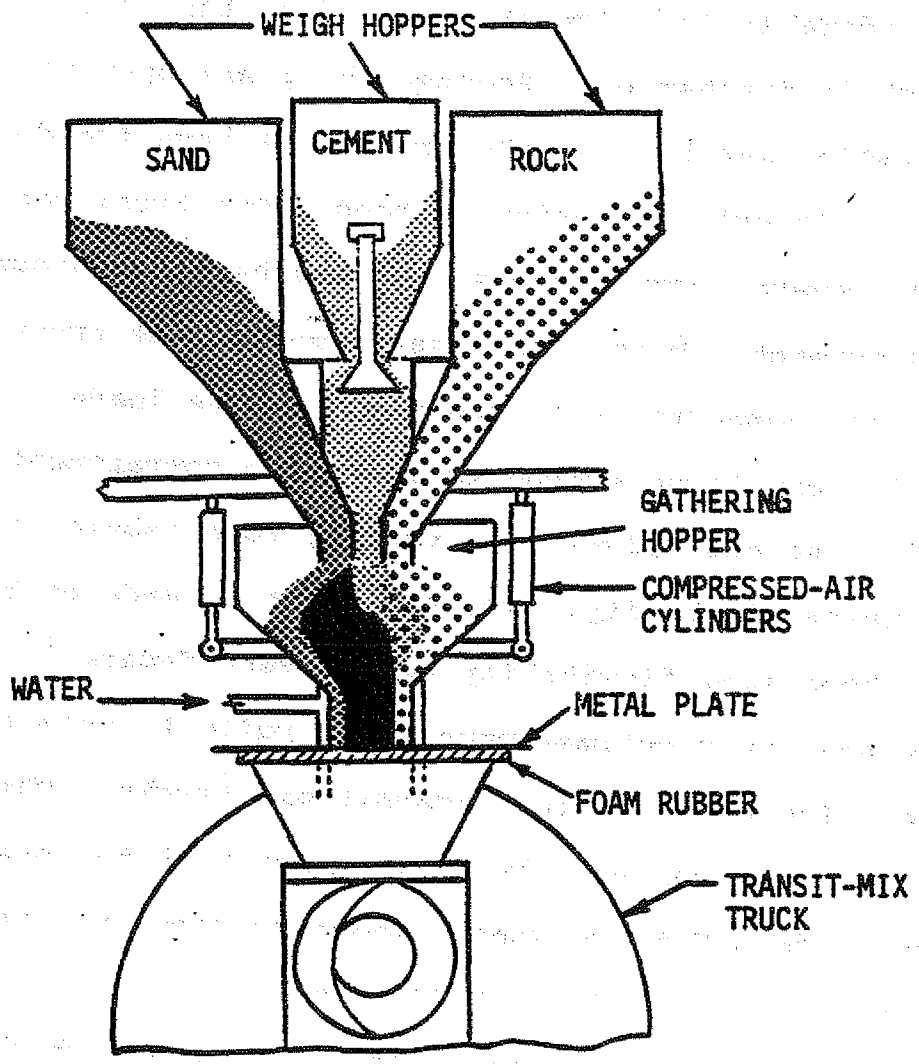

Figure 2.22-3. An adjustable gathering hopper.

Most plants that do dry-batching also do batching with transit-mix trucks; therefore, the weigh hoppers must be high enough to accommodate the transit-mix trucks. Since the receiving hopper of most transit-mix trucks is several feet higher than the top of the flat-bed trucks used to haul the materials in dry-batching, there are considerable fugitive emissions from the fall of material when a dry batch is discharged. Because the plant operator must view the operation and because the truck must have freedom of movement, this is a difficult operation to hood. The truck bed is usually divided into several compartments, and the batch is dropped into each compartment. This necessitates moving the truck after each drop so another compartment of the truck can be loaded. A canopy-type of hood, just large enough to cover one compartment at a time, provides effective dust pickup for venting to a fabric filter and affords adequate visibility. The sides can be made of heavy rubber to give the hood some flexibility and prevent damage if a truck hits it. The hood is sometimes mounted on rails to permit it to be withdrawn and allow batching into transit-mix trucks. The exhaust volume required to collect the dust varies with the shape and position of the hoods. With reasonably good hooding, the required volume is approximately 6,700 to 7,000 cfm.[18]

A conscientious housekeeping program, which includes such measures as prompt cleanup of spills, maintenance of conveying equipment to prevent leaks, and proper handling and disposal of the material collected by fabric filters, is necessary to complete the overall effective control of fugitive emissions at concrete batching plants.

Table 2.22-3 summarizes the available control techniques, their effectiveness and estimated costs, and the RACM selections.

2.22.5 Recommended Reasonably Available Control Measures (RACM)

The RACM selections for concrete batching plant fugitive sources are presented in Table 2.22-3. The recommended control for sand and aggregate stockpiling, as well as the transferring of sand and aggregate to elevated bins, is a wet dust suppression system utilizing a chemical wetting agent. This system gives good control efficiency (estimated 90%[24]) and reduces visible emissions to almost zero percent opacity.[25]

For vehicular traffic at sand and aggregate storage areas, the use of wet suppression (chemical) on unpaved storage areas is recommended. Wetting agents which are sprayed onto the material during processing or at transfer points retain their effectiveness in subsequent storage operations, because they retain surface moisture for extended periods, thereby preventing dusting.

Recommended control for cement unloading to elevated storage silos is the use of enclosures. This is feasible because most plants already control these emissions in this way.

The silo vents (pneumatic loading to silo) can be controlled either by a central control system which controls fugitive emissions from cement dust sources, such as those existing in a dry-batching plant or in a central-mix plant, or by a bank of approximately four simple bin vent filters on top of each silo. These controls are advantageous not only for their high degree of particulate control, but also for the added benefit of product recovery.

For silos which are loaded by bucket elevator, RACM is simply the use of fabric "socks". This control method is adequate for such systems because the air displaced from the silo during such loading is minimal.

Where a central collection system is not employed, the weigh hopper emissions may be controlled by venting back to the bins or silos.

TABL_ 2.22-3. A SUMMARY OF THE CONTROL ALTERNATIVES, L .CIENCIES AND COSTS, AND THE RACM SELECTIONS FOR FUGITIVE DUST EMISSIONS FROM CONCRETE BATCHING PLANTS

Fugitive dust sources	Control alternatives	Control efficiency, %	Control costs, Jan., 1980 $		Cost benefit, $/lb	RACM selection
			Capital	Annualized		
(1) Sand and aggregate storage						
Loading onto pile	Enclosure (stone ladders)	70-99[a,b]	(See Section 2.1)		NA	Wet suppression (chemical)
	Wet suppression (chemical)	80-90[b]	(See Section 2.1)		NA	
	Telescopic chutes	75[b]	(See Section 2.1)		NA	
Loading out	Wet suppression (chemical)	80-90[b]	(See Section 2.1)		NA	Wet suppression (chemical)
	Watering	50[c]	(See Section 2.1)			
	Gravity feed onto conveyor	80[b]	(See Section 2.1)		NA	
Wind erosion	Enclosure	95-99[b]	(See Section 2.1)		NA	Wet suppression (chemical)
	Wet suppression (chemical)	90[b]	(See Section 2.1)		NA	
	Watering	50[b]	(See Section 2.1)		NA	
Vehicular traffic	Enclosure	95-99[c]	(See Section 2.1)		NA	Wet suppression (chemical)
	Wet suppression (chemical)	90[c]	(See Section 2.1)		NA	(good housekeeping)
	Watering	50[c]	(See Section 2.1)		NA	
	Traveling booms to distribute material	no estimate	(See Section 2.1)		NA	
(2) Transfer of sand and aggregate to elevated bins	Enclosure, vent to fabric filter	99[b]	(See Section 2.1)		NA	Wet suppression (chemical)
	Wet suppression (chemical)	95[b]	(See Section 2.1)		NA	
	Watering	50[b]	(See Section 2.1)		NA	
(3) Cement unloading to elevated storage silos	Enclosure[a]	70[d]	860[e]	200[f]	0.13	Enclosure[a]

(continued)

TABLE 2.22-3 (continued)

Fugitive dust sources	Control alternatives	Control efficiency, %	Control costs, Jan., 1980 $		Cost benefit, $/lb	RACM selection
			Capital	Annualized		
(4) Silo vents	Vent to fabric filter[j]	99[g]	107,000[h]	16,300[i]	2.28	Vent to fabric filter[j]
	Fabric "sock"[a]	99[g]	2,300[k]	m	NA	Fabric "sock"[a]
	Vent to fabric filter[l]	99[g]	10,800[n]	3,000[i]	1.42	
	Vent filter[o]	99[g]	5,200[p]	1,500[q]	0.73	Vent filter[o]
(5) Weigh hopper loading of cement, sand, and aggregate	Vent back to bins or silos	95[g]	m	m	NA	Vent back to bins or silos[t]
	Vent to fabric filter	99[g]	q	q	2.28	Vent to fabric filter[j]
(6) Mixer loading of cement, sand, and aggregate (central-mix plant)	Mobile hood, vent to fabric filter	99[g]	q	q	2.28	Mobile hood, vent to fabric filter
(7) Loading of transit-mix truck (batching)	Enclosure	70-99[r]	4,000 to 22,000[s]	m	NA	Enclosure[s]
	Choke feed	90[g]	m	m	NA	
(8) Loading of flat-bed truck (dry-batch)	Canopy-type hood, vent to fabric filter	99[g]	107,000[h]	16,300[i]	2.28	Canopy-type hood, vent to fabric filter[u]

[a] For bucket elevators.

[b] Reference 21. p. 3-6.

[c] Reference 26.

[d] "Weather-tight" system; no active dust collection system.

[e] Based on a 200 ft. conveyor with an enclosure cost of $43/ft. Reference 19. p. 6-3.

[f] Assuming annual cost of approximately 20% of the capital costs.

[g] Engineering judgment.

[h] Reference 20. Based on 10,000 acfm. One system to control emissions from sources 4, 5, 6, & 8.

(continued)

TABLE 2.22-3 (continued)

[i]Reference 20. Based on 2,000 hr/yr operation producing 89,000 tons/yr.

[j]Part of central collection system to control sources 4, 5, 6, & 8 at central mix plants.

[k]Reference 27.

[l]Applicable for plants with pneumatic delivery and no central collection system. Baghouse equipped with mechanical shaking device and blower.

[m]Costs not available.

[n]Reference 22.

[o]Applicable for plants with pneumatic delivery and not utilizing a central collection system. (Bank of approximately 4 simple filtered vents atop the silo).

[p]Reference 22 and 23.

[q]Costs included within those for source 4. One central collection system to control emissions from sources 4, 5, 6, & 8.

[r]Low value, simple enclosure; high value, enclosure plus bag filter.

[s]If an adjustable gathering hopper (choke feed) is not currently being utilized. For plants using such hopper and choke feed, no additional control is required.

[t]Applicable for plants not utilizing a central collection system.

[u]Part of central collection system to control sources 4, 5, & 6.

For mixer loading of cement, sand and aggregate at central-mix plants, RACM is the use of a mobile hood with exhaust to a central fabric filter.

The emissions occurring during the loading of the transit-mix trucks (batching) can be controlled by either enclosure or by choke feeding through the use of an adjustable gathering hopper, whichever is more economically feasible for each specific plant affected.

The use of canopy-type hoods with ventilation to a fabric filter is recommended for the loading of flat-bed trucks at dry-batching plants.

REFERENCES FOR SECTION 2.22

1. Technical Guidance for Control of Industrial Process Fugitive Particulate Emissions. EPA-450/3-77-010, March 1977. p. 2-311.

2. Compilation of Air Pollutant Emission Factors. Second Edition. U.S. EPA, Office of Air and Water Management, Office of Air Quality Planning and Standards. Publication No. AP-42. Research Triangle Park, North Carolina. July 1979. p. 8.10-3.

3. Personal Communication from Mr. M.M. Reid, Assistant to Technical Director, Lone Star Industries, Inc. Cement and Construction Materials Group to Mr. Don Goodwin, U.S. EPA, Emission Standards and Engineering Division, Research Triangle Park, North Carolina. January 12, 1977.

4. Threshold Limit Values for Chemical Substances and Physical Agents in the Workroom Environment. American Conference of Governmental Industrial Hygienists. Cincinnati, Ohio. 1976.

5. Air Pollution Engineering Manual. Second Edition. U.S. EPA, Office of Air and Water Programs, Office of Air Quality Planning and Standards. Publication No. AP-40. Research Triangle Park, North Carolina. May 1973. p. 336.

6. Op. cit. Reference 2. p. 2-316.

7. Op. cit. Reference 5. p. 336.

8. Ibid. p. 335.

9. Op. cit. Reference 2. p. 2-318.

10. Ibid. p. 2-316.

11. Op. cit. Reference 5. p. 335.

12. Op. cit. Reference 2. p. 2-318.

13. Ibid. p. 2-318.

14. Op. cit. Reference 5. p. 335.

15. Ibid. p. 336.

16. Op. cit. Reference 2. p. 2-319.

17. Op. cit. Reference 5. p. 337.

18. Op. cit. Reference 2. p. 2-320.

19. Bohn R., T. Cuscino, Jr., and C. Cowherd, Jr. Fugitive Emissions from Integrated Iron and Steel Plants. Midwest Research Institute, Kansas City, Mo. Prepared for U.S. EPA, Research Triangle Park, North Carolina. EPA-600/2-78-050. March 1978. p. 6-3.

20. Industrial Gas Cleaning Institute, Inc. Nonmetallic Minerals Industries Control Equipment Costs. Prepared for U.S. EPA, Research Triangle Park, North Carolina. Contract No. 68-02-1473, Task No. 19, February 1977.

21. Ela, R.E. Cement Minerals Yearbook, 1973. Volume I. Metals, Minerals, and Fuels. U.S. Department of the Interior. Bureau of Mines. Washington, D.C. 1975. p. 3-6.

22. Gard, Inc. Capital and Operating Costs of Selected Air Pollution Control Systems. EPA-450/3-76-014, May 1976.

23. Personal Communication between Bob Moran, Wheelabrator-Frye, and James A. Cummings, Ohio EPA. Jan. 1980.

24. Op. cit. Reference 2. p. 3-15.

25. Ibid. p. 3-39.

26. Ibid. p. 2-38.

27. Personal Communication between Paul Norris, Kramer-Norris Equipment Company, and James A. Cummings, Ohio EPA. Jan. 1980.

A Typical Concrete Batch Plant Has The Following Data:

89,000 T/yr concrete produced
2,000 hr/yr

Raw material quantities were calculated on the basis of the following percentages (by weight) of the concrete produced:

sand & aggregate	85%
cement	10%
water	5%

Sources

1, 2 Covered in PEDCo's Write-up In Section 2.1, General Fugitive Dust Sources.

3 From PEDCo's Write-up On Material Handling In Section 2.1.

$$C/B = \frac{\$200}{(0.24\ lb/T)\ (89{,}000\ T/yr)\ (.10)\ (.70)} = \$0.13/lb\ TSP\ Removed$$

4 Central Collection System - For Sources 4, 5, 6, & 8.

		cfm thru duct	filter velocity	Ac = Area of Cloth
(A)	Bin & Silo Vents	700	3 fpm	
(B)	Weigh Hopper	32	3 fpm	$3\ fpm = \frac{10{,}000\ acfm}{Ac}$
(C)	Mixer	2500	3 fpm	
(D)	Flat-bed Truck Loading	6500	3 fpm	$Ac = 3{,}333\ ft^2$
	Total = 9732 = 10,000 acfm			

[REF. 22] Baghouse Price (Fig. 4-7) $[2910 + 1.6\ (3333)]\ \frac{(249.6)}{(192.1)} = .\$10{,}710$

Costs of Bags (Tables 4-1, 4-2) $3333\ ft^2 \times 2 \times \$.40/ft^2 = \$2666.4$

$\frac{(249.6)}{(192.1)} = \ldots.\ 3{,}465$

(D) Rectangular Hood (8' x 2.4') & Supports Costs (Fig. 4-17) [L/W Ratio = 4] Plate Area Requirement $1 + 0.615(8)^2 = 40\ ft^2$

(Fig. 4-19) Labor Cost 150

$40\ ft^2 \times 5.625\ lb/ft^2 \times 1.2 = 270$ lbs.

(p. 4-25) Hood Cost LG + \$.208/lb (8)(4) + (.208)(270) ≈ \$90

$\frac{(249.6)}{(192.1)}$ = .. 120

(Fig. 4-21) Ductwork Cost 100 ft x \$50/ft = \$5,000 $\frac{(249.6)}{(192.1)}$ 6,500

(C) Circular Hood (50° θ) + Supports Cost

(Fig. 4-18) Plate Area Requirement $1.343 \times \frac{(40)^2}{(12)} = 165.8\ ft^2$

(165.8)(5.625)(112) = 1119 lbs.

(Fig. 4-20) Labor Cost 350

(p. 4-25) Hood Cost (165.8)(\$.90/ft^2) + (\$.108)(1119) =

\$270 $\frac{(249.6)}{(198.1)}$ ≈ \$350

plus, Hydraulics for Swing-away (≈\$1,000) \$1,000 + \$350 = ... 1,350

(Fig. 4-21) Ductwork Cost 100 ft x \$50/ft = \$5,000 $\frac{(249.6)}{(192.1)}$ ≈ 6,500

(A) & (B) (Fig. 4-21) Ductwork Cost (50'+50' = 100') 100 ft x $25/ft = $2500 $\frac{(249.6)}{(192.1)}$ = ... $3,250

(Fig. 4-24) Elbow Ducts (4) ($850)+($850)+($350) = $2400 $\frac{(249.6)}{(192.1)}$ = ... 3,120

(Fig. 4-26) Expansion Joints (4) ($2375)+(2375)+($1625) = $8000 $\frac{(249.6)}{(192.1)}$ = ... 10,400

(Fig. 4-40) Fans (23", Class II, Backwardly Curved, 4" ΔP) 1200 rpm, 8 bhp $1600 $\frac{(249.6)}{(192.1)}$ = ... 2,079

(Table 4-5) Motor 68 + 18(8) = $212 $\frac{(249.6)}{(192.1)}$ = 275

(Table 4-5) Mag. Starter 150 + 2.5(8) - .00005(8^3) $173 $\frac{(249.6)}{(192.1)}$ = ... 225

Total Cost =..... $48,494

④ Central Collection System Capital Costs

1)	Equipment Costs (control device + aux.'s)	=	$48,494
2)	Tax & Freight (7% of 1)	=	3,395
3)	Installation Costs (75% of 1)	=	36,371
4)	Subtotal (1 + 2 + 3)	=	88,260
5)	Engineering (10% of 4)	=	8,826
6)	Subtotal (4 + 5)	=	97,086
7)	Contingencies (10% of 6)	=	970
8)	Total Capital Costs (6 + 7)	=	$106,795

Annualized Costs

Capital Charges R · PV = PV /n=30 i=12%
R · (8.055) = $106,795
R = $13,258

Operating Costs (Fig. 46) ($.35/hr)(2,000 hr/yr) = $700
$\frac{(249.6)}{(192.1)}$ = $910

Maintenance (Table 4-12) $2136

Total Annual Costs = $13,258 + $910 + $2,136 = $16,304

C/B (Central mix plants, sources 4, 5, & 6) = $\frac{\$16,304}{[(89,000)(.10)(.24)+(89,000)(.95)(.02) + (89,000)(.95)(.04)](.99)}$

C/B = $2.28/lb TSP removed

C/B (Dry-batching, Sources 4, 5, & 8) = $\frac{\$16,304}{[(89,000)(.10)(.24)+(89,000)(.95)(.02) + (89,000)(.95)(.04)](.99)}$

C/B = $2.28/lb TSP removed

Silo Vent Emissions

Cement Elevator . . . . Pneumatic Delivery

Silo Capacity = 250 ft^3

Filter Velocity = 3 fpm

Cloth Area = 200 ft^2

Air Flow Rate = 350 cfm during most of loading cycle, increasing to 700 cfm at end of cycle.

Control Device: Baghouse equipped with blower to relieve pressure built up within the silo, and a mechanical shaking mechanism.

Capital Costs

[Ref. 22]	Baghouse	$4,197
	Fabric	208
	Fan w/motor	892
	Equipment	5,297
	Tax, freight (7%)	371
	Maintenance (2%)	106
	Install (75%)	3,973
	Subtotal	9,747
	Engr. (10%)	975
	Subtotal	10,722
	Contingency (10%)	107

Total Capital Investment = $10,829 (Jan.'80) ≈ $10,800

Annual Costs

Operating Costs ($0.35)(2,000 hrs/yr) = $700 $\frac{(249.6)}{(192.1)}$ ≈ $910

Maintenance (2%)(10,800) = $216

Capital Charges PV = R · PV/ n = 10 i = 12%
(5.650) R = $10,800
R = $1,912

Total Annual Costs = $216 + $910 + $1,912 = $3,000

$$C/B = \frac{\$3,000}{(0.24\ lb/T)(89,000\ T/yr)(.10)(.99)}$$

C/B = $1.42/lb TSP removed

Silo Vent Emissions

[Ref. 5] Cement Elevator .... Pneumatic Delivery
Filter Velocity 7 fpm
Cloth Area ≈ 100 ft^2
Air Flow Rate = 700 cfm
Control Device: Bank of approximately 4 simple filtered vents atop the silo; should provide shaking mechanism to prevent blinding of cloth.

[Ref. 23] Collector with shaker ≈ \$2/cfm (collector sizing):

700 cfm x 2 (2 to 1) = 1400 cfm x \$2.00 = \$2800 (Jan. '80)

Bags: [Table 4-2] (2)(100) = 200

$$(200)(\$.40) = \$80 \frac{(249.6)}{(192.1)} = \$104$$

\$2800 + \$104 = \$2,904

Capital Costs

1.	Equipment Costs (control device & aux.'s)	=	\$2,904
2.	Tax & Freight (7% of 1)	=	203
3.	Installation Costs (40% of 1)	=	1,162
4.	Subtotal (1 + 2 + 3)	=	4,269
5.	Engineering (10% of 4)	=	427
6.	Subtotal (4 + 5)	=	4,696
7.	Contingencies (10% of 6)	=	470
8.	Total Capital Costs	=	\$5,166

Annualized Costs

Operating Costs [Fig. 4-60] (\$0.25)(2,000 hrs/yr) = \$400

$$\frac{(249.6)}{(192.1)} = \$520$$

Maintenance [Table 4-12]: \$103

Capital Charges PV = R · PV/n = 10 i = 12%
(5.650) R = \$5,166
R = \$ 914

Total Annual Costs = \$520 + \$103 + \$914 = \$1,537

$$C/B = \frac{\$1,537}{(0.24\ lb/T)(89,000\ T/y)(.10)(.99)}$$

$$C/B = \frac{\$1,537}{2,114.6\ lb/yr}$$

C/B = \$.73/lb TSP Removed

APPENDIX FOR SECTION 2.22

A Typical Concrete Batch Plant Has The Following Data:

390,000 T/yr
2,000 hr/yr

Sources

①② Covered In PEDCo's Write-up In Section 2.1, General Fugitive Dust Sources.

③ From PEDCo's Write-up On Material Handling In Section 2.1.

④ Central Collection System - For Sources 4 , 5 , 6 , & 8 .

		cfm thru duct	filter velocity	Ac = Area Of Cloth
(A)	Bin & Silo Vents	700	3 fpm	
(B)	Weigh Hopper	32	3 fpm	$3 \text{ fpm} = \frac{10{,}000 \text{ acfm}}{Ac}$
(C)	Mixer	2500	3 fpm	
(D)	Flat-bed Truck Loading	6500	3 fpm	$Ac = 3{,}333 \text{ ft}^2$

Total = 9732 ∿ 10,000 acfm

[REF.20] Baghouse Price (Fig. 4-7) $[2910 + 1.6(3333)] \frac{(249.6)}{(192.1)}$ = . . .$10,710

Costs Of Bags (Tables 4-1, 4-2) $3333 \text{ ft}^2 \times 2 \times \$.40/\text{ft}^2 = \$2666.4 \frac{(249.6)}{(192.1)}$ = ... 3,465

(D) Rectangular Hood (8'x2.4') & Supports Costs
(Fig. 4-17) [L/W Ratio = 4] Plate Area Requirement $1 + 0.615(8)^2 = 40 \text{ ft}^2$

(Fig. 4-19) Labor Cost 150
$40 \text{ ft}^2 \times 5.625 \text{ lb/ft}^2 \times 1.2 = 270$ lbs.
(p. 4-25) Hood Cost LG + $.208/lb $(8)(\$4)+(.208)(270) \approx \$90 \frac{(249.6)}{(192.1)}$ = . . 120
(Fig. 4-21) Ductwork Cost 100 ft x $50/ft = $5000 $\frac{(249.6)}{(192.1)} \approx$ 6,500

(C) Circular Hood (50°θ) + Supports Cost
(Fig. 4-18) Plate Area Requirement $1.343 \times \frac{(40)^2}{(12)} = 165.8 \text{ ft}^2$

$(165.8)(5.625)(112) = 1119$ lbs.
(Fig. 4-20) Labor Cost 350
(p.4-25) Hood Cost $(165.8)(\$.90/\text{ft}^2)+(\$.108)(1119) = \$270 \frac{(249.6)}{(198.1)} \approx \$350$
plus, Hydraulics for Swing-away (∿$1,000) $1,000 + $350 = ... 1,350
(Fig. 4-21) Ductwork Cost 100ft x $50/ft = $5,000 $\frac{(249.6)}{(192.1)} \approx$6,500

(A)&(B) (Fig. 4-21) Ductwork Cost (50'+50'=100') 100 ft x $25/ft = $2500 $\frac{(249.6)}{(192.1)}$ ≈ . . . . . $ 3,250

(Fig. 4-24) Elbow Ducts (4) ($850)+($850)+($350) = $2400 $\frac{(249.6)}{(192.1)}$ ≈ 3,120

(Fig. 4-26) Expansion Joints (4) ($2375)+(2375)+($1625) = $8000 $\frac{(249.6)}{(192.1)}$ ≈ 10,400

(Fig. 4-40) Fans (23", Class II, Backwardly Curved, 4" ΔP) 1200 rpm, 8 bhp $1600 $\frac{(249.6)}{(192.1)}$ = . . . 2,079

(Table 4-5) Motor 68 + 18(8) = $212 $\frac{(249.6)}{(192.1)}$ = 275

(Table 4-5) Mag. Starter 150 + 2.5(8) - .00005(8^3) $173 $\frac{(249.6)}{(192.1)}$ = ... 225

Total Cost = ... $48,494

④ Central Collection System Capital Costs

1)	Equipment Costs (control device + aux.'s)	=	$48,494
2)	Tax & Freight (7% of 1)	=	3,395
3)	Installation Costs (75% of 1)	=	36,371
4)	Subtotal (1 + 2 + 3)	=	88,260
5)	Engineering (10% of 4)	=	8,826
6)	Subtotal (4 + 5)	=	97,086
7)	Contingencies (10% of 6)	=	970
8)	Total Capital Costs (6 + 7)	=	$106,795

Annualized Costs

Capital Charges R · PV = PV /n=30 i=12%
R · (8.055) = $106,795
R = $13,258

Operating Costs (Fig. 46) ($.35/hr)(2,000 hr/yr) = $700
$\frac{(249.6)}{(192.1)}$ = $910

Maintenance (Table 4-12) $2136

Total Annual Costs = $13,258 + $910 + $2,136 = $16,304

$$C/B = \frac{\$16,304}{[(0.24\ lb/T)(390,000\ T/yr)+(0.02\ lb/T)(390,000\ T/yr)+(0.04\ lb/T)(390,000\ T/yr)+(0.04\ lb/T)(390,000\ T/yr)].99}$$

$$C/B = \frac{\$16,304}{132,600\ lb/yr}$$

C/B = $0.12/lb TSP Removed

Silo Vent Emissions

Cement Elevator . . . . Pneumatic Delivery

Silo Capacity = 250 ft^3

Filter Velocity = 3 fpm

Cloth Area = 200 ft^2

Air Flow Rate = 350 cfm during most of loading cycle, increasing to 700 cfm at end of cycle.

Control Device: Baghouse equipped with blower to relieve pressure built up within the silo, and a mechanical shaking mechanism.

Capital Costs

[Ref. 22]	Baghouse	$4,197
	Fabric	208
	Fan w/motor	892
	Equipment	5,297
	Tax, freight (7%)	371
	Maintenance (2%)	106
	Install (75%)	3,973
	Subtotal	9,747
	Engr. (10%)	975
	Subtotal	10,722
	Contingency (10%)	107

Total Capital Investment = $10,829 (Jan.'80) ≈ $10,800

Annual Costs

Operating Costs ($0.35)(2,000 hrs/yr) = $700 $\frac{(249.6)}{(192.1)}$ ≈ $910

Maintenance (2%)(10,800) = $216

Capital Charges PV = R · PV/ n = 10 i = 12%
(5.650) R = $10,800
R = $1,912

Total Annual Costs = $216 + $910 + $1,912 ≈ $3,000

$$C/B = \frac{\$3,000}{(0.24\ lb/T)(390,000\ T/yr)(.99)}$$

C/B = $0.03/lb TSP removed

2.23 SANDBLASTING OPERATIONS

2.23.1. Process Description

Sandblasting is an industrial process wherein silica sand (or other abrasive material), of varying degrees of abrasiveness, is propelled against a product surface. The sandblasting creates the desired surface texture for a finished product. Although the applications of sandblasting are numerous, the discussion here will be of a general nature and will be limited to manufacturing processes where sandblasting is both a permanent operation, used in conjunction with the processing of a product, and a fugitive dust source.

Sandblasting can be conducted outdoors in the open air or indoors in an enclosure. Reasonably available control measures for sandblasting depend upon how and where the sandblasting is conducted more so than what type of part is being blasted. Therefore, this category will be divided into indoor and outdoor blasting operations.

The most common method of propelling the abrasive is by use of compressed air through either the suction blast method or the direct pressure blast method.[1] In the suction blast method (see Figure 2.23-1), separate hoses are connected directly to the sand supply and air supply, respectively. These hoses are then connected to a sandblasting mechanism. The high velocity of the air through the gun creates a partial vacuum that draws in and expels the sand.[2]

With the direct pressure method (see Figure 2.23-2), the sand supply is located in a container which is under pressure. The abrasive supply tank is the pressure vessel with the compressed air line connected to both the top and bottom discharge line, thereby creating equal pressure above and below the abrasive. This permits the abrasive to flow by gravity into the high volume air stream in the discharge hose which then accelerates the abrasive to the velocity required to do the blast cleaning.[3] The direct blast machines propel from two

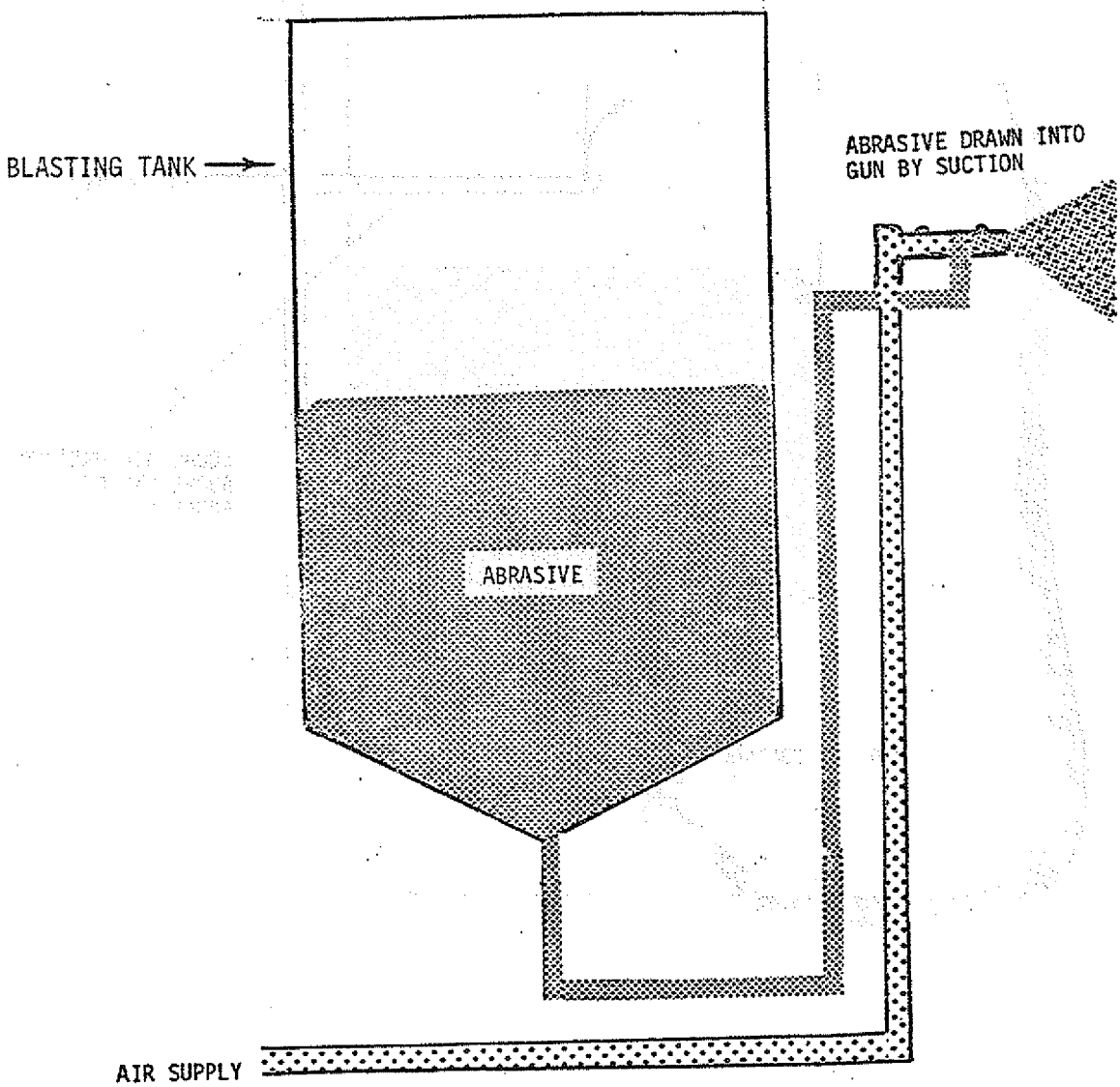

Figure 2.23-1. Suction blast method.

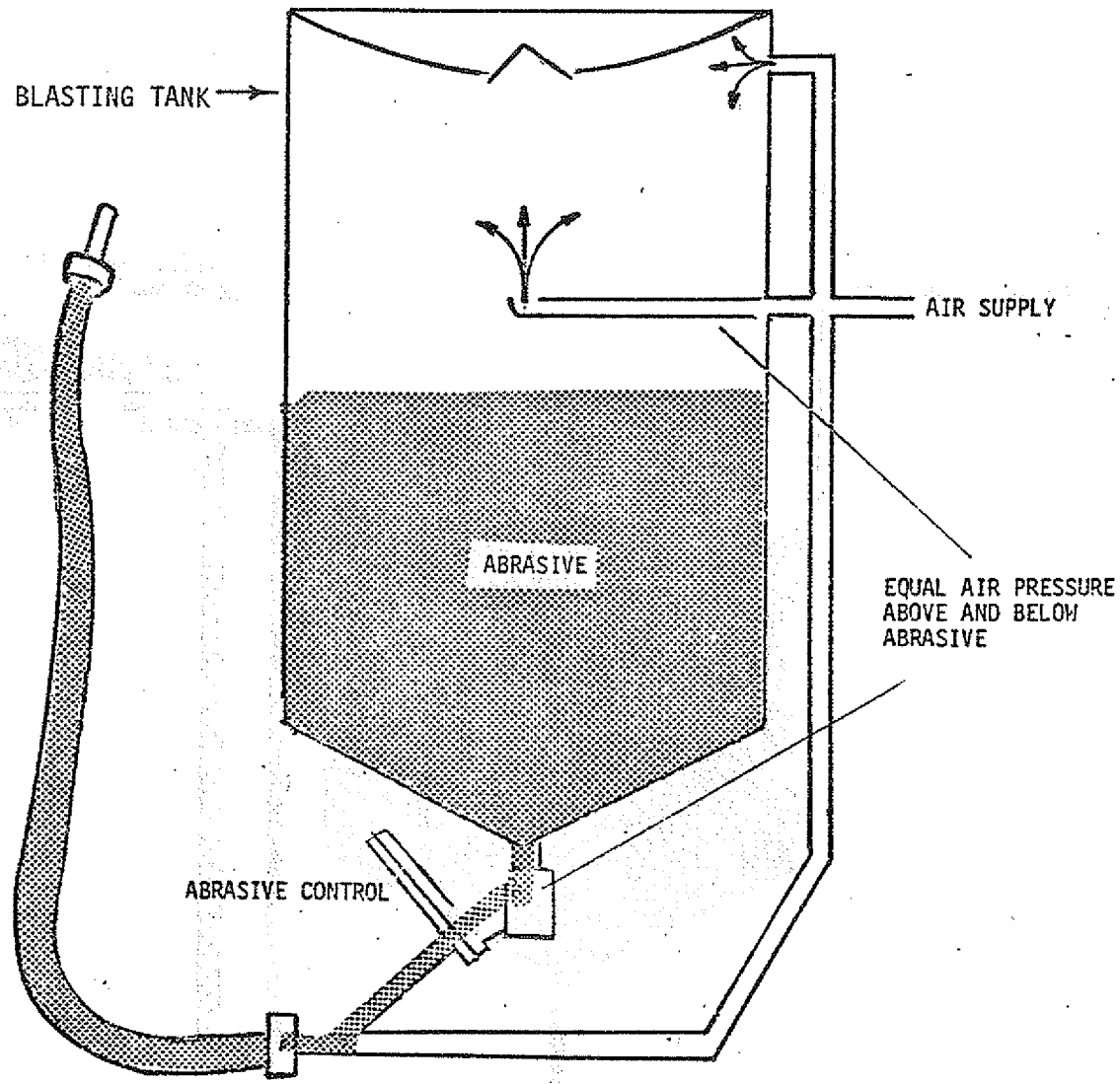

Figure 2.23-2. Direct blast method.

to four times as much abrasive per cubic foot of air (at equal air pressures) than the suction blast method.[4]

Regardless of which method of blasting is used, a large amount of fugitive dust is created when the propelled abrasive impacts upon the product surface, since both the sand and the product surface will fracture.[5] The larger dust particles from this process will settle in the immediate blasting area while the smaller particles of fugitive dust will be transported much greater distances by the ambient air. The greatest source of fugitive dust from a sandblasting operation is the sandblasting itself. Several other fugitive dust sources are associated with a sandblasting operation. As shown in Figure 2.23-3, these sources include roadways, vehicular traffic and material handling and storage.

2.23.2 Fugitive Dust Emission Factors

The fugitive particulate emission factors for the various processes in sandblasting are set forth in Table 2.23-1.

As can be seen from the Table, there is no known published data, for any type of sandblasting, from which a representative emission factor can be obtained. Naturally, the amount of fugitive dust generated is directly related to the type and amount of abrasive being used and the composition of the part being blasted. A rough estimate indicates that sandblasting of pre-cast concrete panels has an emission factor of 1.55 pounds per ton of product.[6] This is only a rough estimate for a specific industry, and its accuracy cannot be ascertained.

2.23.3 Particle Characterization

A typical size analysis of silica sand particles resulting from sandblasting associated with a zinc galvanizing operation[7] will be used to indicate size distribution for sandblasting emissions in general. Table 2.23-2 presents that particle size data.

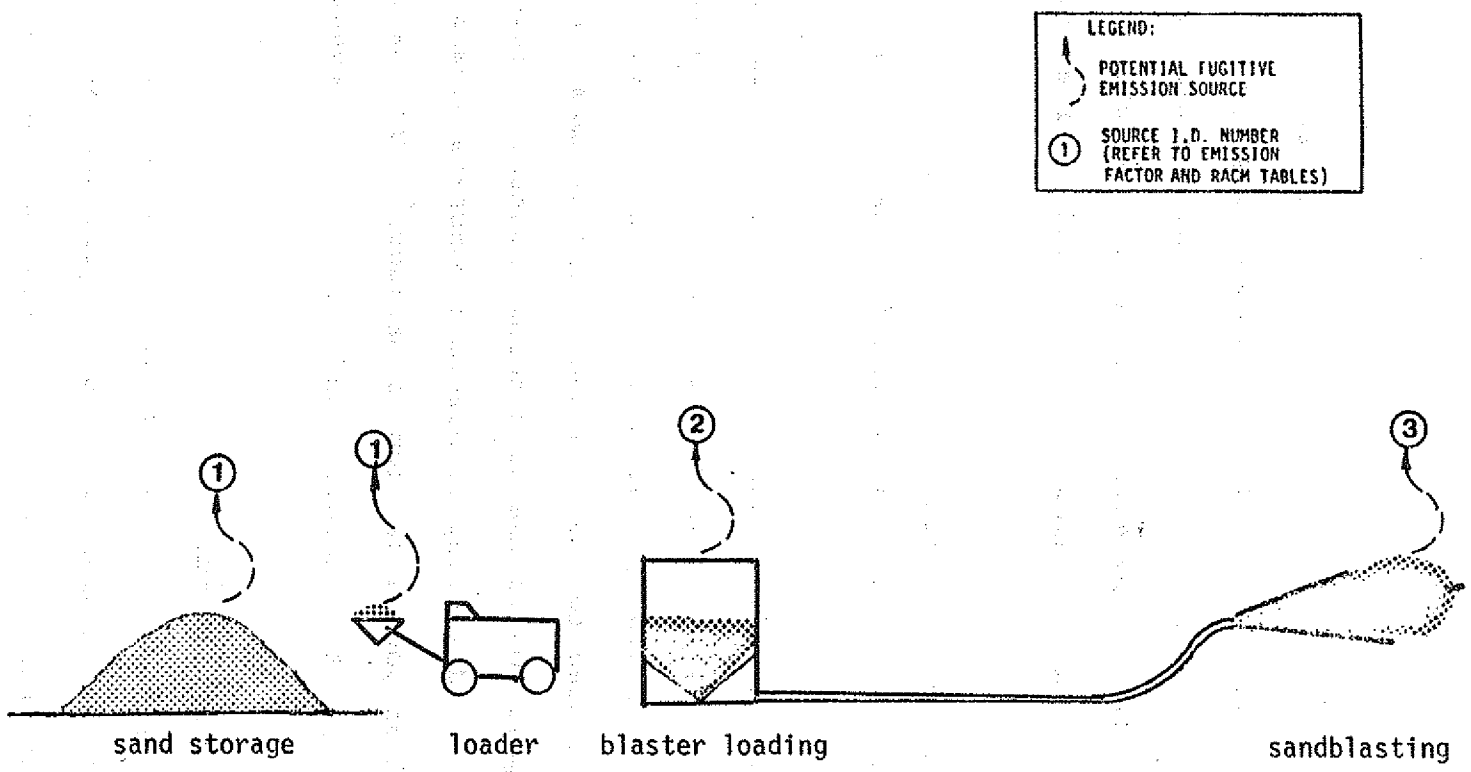

Figure 2.23-3. Simplified process flow diagram for sandblasting and associated fugitive particulate emission sources.

TABLE 2.23-1. FUGITIVE DUST EMISSION FACTORS FOR SANDBLASTING OPERATIONS

Source	Emission factor	Reliability rating	Reference
(1) Storage of sand loading onto pile	0.04 lb/ton transferred	D	22
vehicular traffic	0.065 lb/ton stored	D	22
load out	0.05 lb/ton transferred	D	22
wind erosion	0.11 lb/ton stored	D	22
(2) Unloading sand into storage bin on sandblaster	0.04 lb/ton trans-	D	22
(3) Sandblasting	1.55 lb/ton of feed[a]	E	24

[a] This emission factor is based upon the blasting of precast concrete panels. Emission factors for blasting of other products are not available.

TABLE 2.23-2. TYPICAL SIZE DISTRIBUTION OF FUGITIVE DUST PARTICLES AS A RESULT OF SANDBLASTING[6]

Particle diameter, μm	Cumulative weight, %
1.6	0.4
2.7	1.8
4.4	5.3
6.6	11.1
8.3	15.6
9.3	18.2
10.4	21.6
11.5	24.6
14.8	33.2
19.8	41.3
26.4	50.1
33.0	58.7
41.2	65.6
49.5	72.1
65.9	82.0
98.9	96.5
147.8	100.0

Silica sand (or silicon dioxide) is a colorless crystal with a molecular weight of 60.09 grams/gram mole, a density of 2.6 grams/cm^3 and a melting point of 1710°C.[8] Silica is the chief cause of pulmonary dust disease, especially silicosis.[9] The duration of exposure required to develop silicosis in sandblasters is estimated at between two and ten years.[10] Silicosis causes the lungs to produce a "diffuse, nodular fibrosis in which the parenchyma and lymphatic system are involved."[11] In advanced stages of this disease, tuberculosis, heart failure or anoxemia may intervene. As a result, massive destruction of lung tissue will produce death in the victim.[12]

Federal and state laws usually require operators to wear air-supplied hoods (helmets) to prevent excessive exposure to particulates. Although the use of well-maintained blasting hoods offers fair protection during blasting, concern has been voiced over the high concentration of suspended respirable dust in the ambient air during non-blasting periods (which exceeds the TLV by several times).[13] Therefore, only wearing hoods during the blasting period may not be the entire solution to preventing silicosis.

2.23.4 Control Methods

Since most enclosures are not able to confine all the dust generated by indoor, dry abrasive blasting and because that dust can impair the operator's vision and make breathing difficult, some controls are almost always employed for these operations. The most widely used and most efficient type of dust collector for this industry is the baghouse (with a superficial face velocity of the gas passing through the filter cloth not to exceed three feet per minute).[14] High efficiency cyclones equipped with a tube-type fabric filter can be used to control the fugitive dust, but this method is not as efficient as a baghouse. High efficiency cyclones have difficulty in collecting the very fine dust particles (<5μm).[15] The tube-type

fabric filter, besides being unable to capture the fine particles, also has a tendency to clog easily, resulting in a loss of draft at the cyclone inlet.

Baghouses are capable of collecting particles that have a diameter of one micron or less with an efficiency of ninety percent.[16] Overall, the baghouse is capable of efficiencies in excess of 99 percent.[17]

It is estimated that building a 1200 ft^3 enclosure (to house the blasting of concrete panels to expose aggregate) and evacuating the blasting operation to a baghouse with a three to one air-cloth ratio would result in a capital expenditure of $41,000 and an annualizied cost of $6,500.[18] A cyclone, on the other hand, with the same capacity and for the same operation would require a capital expenditure of $18,000 and an annualized cost of $1,600.[19]

Wet blast adaptors eliminate between 80 to 90 percent of the dust without lowering sandblasting efficiency.[20] The wet blast adaptor, as illustrated in Figure 2.23-4, is a ring that attaches to the blaster nozzle. The ring has holes which spray water into the blast pattern just after the air and abrasive leave the nozzle. The water is metered by a petcock located at the blast head. The wet blast adaptor is supplied with water from a standard garden hose or faucet.

The capital cost of a wet control system capable of suppressing the dust generated by the above-mentioned concrete panel blasting operation is approximately $400-$500 (wet blast adaptor plus hoses).[21] Operating cost is limited to the cost of water.

The feed-sand is stored in large outdoor storage piles and is transferred to the sandblaster by means of a front end loader. The recommended controls for handling storage piles are discussed in Section 2.1 of this study.

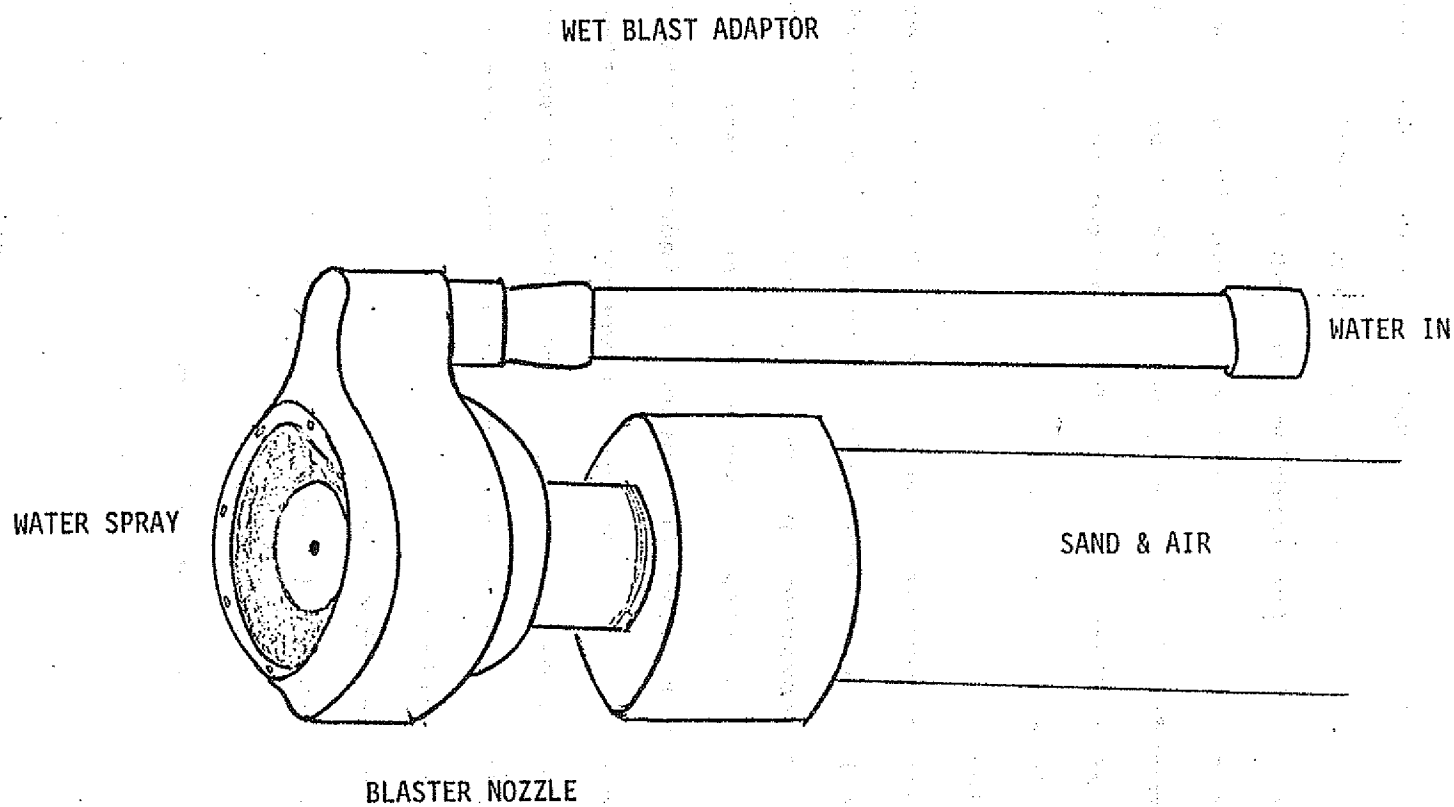

Figure 2.23-4. Wet blast adaptor.

The control of fugitive dust emissions generated on roadways are also discussed in Section 2.1 of this study.

2.23.5 Recommended Reasonably Available Control Measures (RACM)

The recommended RACM for each of the listed fugitive dust emission sources is shown in Table 2.23-3. Selections were based upon considerations of ease of installation, emission control requirements, and current control practices within the sandblasting industry.

The RACM selection for sand storage is wetting with water. No control is recommended for loading sand into the blaster because this source is not a significant fugitive dust emitter due to the low emission and production rates (less than 1/2 ton per hour) for average blasting operations.

For the blasting process itself, two RACM's were selected. They will be compared by use of "cost effectiveness" figures which quantify the cost of control equipment per pound of particulates removed. Where moisture will not affect product quality, a sandblasting water spray attachment may be used (in outdoor or indoor blasting) to control fugitive dust. The cost effectiveness of the water adaptor is $0.01 per pound of particulate removed. Where excessive moisture will adversely affect product quality, an enclosure with a induced draft system to maintain ventilation and visibility is recommended. It is also recommended that the exhaust air be vented to a baghouse. The baghouse system should be cabable of virtually 100 percent collection efficiency. The recommended ventilation rate is 80 fpm across the floor area with an indraft velocity through all openings of 500 fpm and a superficial face velocity of gas passing through the filter cloth not to exceed 3 fpm.[23] The cost benefit of this method of control is approximately $0.17 per pound particulate removed.

TABLE 2.23-3. A SUMMARY OF THE CONTROL ALTERNATIVES, EFFICIENCIES AND COSTS, AND THE RACM SELECTIONS FOR FUGITIVE DUST EMISSIONS FROM SANDBLASTING OPERATIONS

Fugitive dust sources	Control alternatives	Control efficiencies %	Control costs, Jan. 1980, $		Cost benefit, $/lb	RACM selection
			Capital	Annualized		
(1) Storage of sand	Enclosure, vent to fabric filter	99[a]	87,400[b]	21,000[b]	73.25	Periodic watering
	Enclosure	50[a]	15,000[b]	2,600[b]	9.06	
	Wet suppression (chem.)	95[a]	13,500[b]	2,200[b]	7.67	
	Watering	50[a]	negligible	-	-	
(2) Unloading sand to storage bin on the sandblaster	Operating precaution	-	-	-	-	Operating precautions
(3) Sandblasting	Enclosure with baghouse	99[a]	40,000[c]	6,500[c]	0.17	Enclosure with venting to a baghouse or use of a waterspray attachment.
	Enclosure with high efficiency cyclone and tube-type fabric filter	90[a]	18,000[c]	1,400[c]	0.078	
	Waterspray attachment	80-90[a]	500[c]	500[c]	0.01	

[a] Engineering estimate.

[b] Based upon 20' x 20' x 15' enclosure and jet pulse treating 10,000 acfm. See Section 2.1.2 and 2.13, Table 2.1.2-8 and 2.13-3 of this study.

[c] Assumes blasting capacity of 940 lbs. sand per hour and a baghouse treating 9600 acfm. See Appendix A of this sandblasting category. See reference 20 and 21.

The high efficiency cyclone with tube type fabric filter is not highly favored because it is not as efficient as a baghouse with respect to the collection of small particles. Also, the filter tube is prone to binding or clogging which results in a loss of draft in the cyclone.

REFERENCES FOR SECTION 2.23

1. Air Pollution Engineering Manual (2nd edition), Los Angeles County Air Pollution Control District, May, 1973, PB-225-132, PART I, page 398.

2. Ibid, p. 398.

3. Ibid, p. 398.

4. Ibid, p. 398.

5. Ibid, p. 401.

6. Ohio EPA files.

7. Op. cit. Reference 1, p. 401.

8. Irving Sax, Dangerous Properties of Industrial Materials, 3rd edition, 1968, VanNostrand Reinhold, p. 1088.

9. Ibid.

10. Ibid.

11. Ibid.

12. Ibid.

13. American Industrial Hygene Assoc. Journal, "The Efficiency of Protective Hoods Used by Sandblasters to Reduce Silica Dust Exposure" Feb. 75, V 36, p. 140.

14. Op. cit. Reference 1, p. 401.

15. Ibid. p. 91.

16. Ibid. p. 106.

17. Capital and Operating Costs of Selected Air Pollution Control Systems, GARD, May 1976, p. 2-16.

18. See Appendix A for calculations.

19. Ibid. See Appendix A.

20. Based upon blast cleaning equipment selection guides from Clemco Industries and Anderson Blast Cleaner Co.

21. Conversation with Miles McGregor, of Marietta Concrete, Marietta, Ohio by Ohio EPA, November 1979.

22. Technical Guidance for Control of Industrial Process Fugitive Emissions, EPA-450/3-77-010, March, 1977, pp. 2-17 and 2-35.

23. Op. cit. Reference 1, p. 401.

24. Ohio EPA files.

APPENDIX FOR SECTION 2.23

COST OF CONTROL

Assume:

Enclosure 6'W x 10'H x 20'L Total volume = 1,200 ft^3

80 fpm flow rate across the floor area (vent. rate)

3 fpm superficial face velocity of gas through filter cloth.

8 changes of air/min. = 9,600 ft^3/min.

GARD p. 2-20: 3,200 ft^2 = net filter cloth area required

GARD p. 4-10: Intermittent, pressure, baghouse = $8,500

GARD p. 4-15: Filter cloth cost = 1,310

GARD p. 4-58: Fan motor, 20 Hp, Class II, 3 1/2" DP = 2,000
9,600 cfm

GARD p. 4-24: Hood + duct
L/W = 20/6 = 3.3
LABOR $700
MTL. = 200 ft^2 (5.625)(1.2) = $1,350
2,050

GARD Fig. 4-60: Operational Cost, $0.75 per hour
@ 2040 hours per year 1,530

Baghouse	$ 8,500	
Fabric filter	1,310	
Fan	2,000	
Hood and duct	2,050	
Subtotal	$13,860	
Tax + Freight (7%)	970	
Subtotal	$14,830	
Installation (@75%)	11,122	(GARD p. 4-89)
Subtotal	$25,952	
Engineering (10%)	2,595	
Subtotal	$28,547	
Contingency (10%)	2,855	
Total equipment cost	$31,402	effective 12/1975

Adjust capital cost to 1980 value

JAN INDEX 1976: 192.1
JAN INDEX 1980: 249.6

$\frac{(249.6)}{(192.1)}(31,402) = \$40,800$ Capital investment in terms of Jan. 1980 $

Assume:

Equipment life = 20 years
Cost of capital = 15%
Net emission 18.8 lbs/HR @ 2040 Hrs/yr. (Plant data)

GARD 3-3 UAE = 40,800 (.1598) = <u>$6,520</u>

Cost Benefit = $\frac{\$6,520/yr}{38,352 \text{ lbs mtl.}} = \$0.17$

<u>High Efficiency Cyclones</u>

pg. 11-22 Industrial Ventilation - $0.20/cfm in 1968

(25,000 cfm)($0.20/cfm) = $5,000

PEDCo memo: $\frac{(\text{Jan. 1980 } 250)}{(\text{Jan. 1968 } 125)}(5,000 \text{ Jan. 1968}) = \$10,000$

January 1980 cost of $10,000

Table 4-12 of GARD Manual Installation cost is 75% of equipment cost

($10,000)(.75) = $7,500 installation cost

Table 4-12 GARD Maintenance estimated at 2% of equipment cost
$200

page 4-24 GARD Hood and Ductwork
$(\$2,050)\frac{(249)}{(182)} = \$2,804$

page 4-58 GARD Fan Motor
$(\$3,500)\frac{(249)}{(182)} = \$4,790$

Figure 4-60 GARD ($0.75 per hour)(2040 hours/yr)$\frac{(249)}{(182)} = \$2,090$

Equipment cost

high efficiency cyclone	10,000
fan/motor	4,790
hood and ductwork	2,800
	17,590

1)	Equipment costs (control device + auxiliaries)	=	$17,590
2)	Tax and freight (@7% of 1)*	=	1,230
3)	Installation costs (Table 4-12)	=	7,500
4)	Subtotal (1 + 2 + 3)	=	16,320
5)	Engineering (@ 10% of 4)*	=	1,632
6)	Subtotal (4 + 5)	=	17,952
7)	Contingencies (@ 10% of 6)**	=	1,795
8)	Total capital costs (6 + 7)	=	19,747

Life of cyclone is estimated at 20 years
Cost of capital (i) assumed to be 15% compounded annually over a period (n) of 20 years

page 3-4 GARD Uniform Annual Equivalent = $PW \frac{[(i)(1 + i)^n]}{[(1 + i)^n - 1]}$

PW = present worth
i = interest rate
n = period of years

Table A-10 GARD UAE = ($19,747)(.1598) = $2,870

$$\text{Cost effectiveness} = \frac{\text{annualized cost}}{\text{lb tsp removed}}$$

$$= \frac{\$2,870}{(95\%)(38352)} = \$\frac{.078}{\text{lb}}$$

Sand storage:

Assume: 940 lb sand/hr. required to maintain operations (Plant file).

2000 HRS/YR of operation

1,880,000 lbs/yr or 940 tons per. yr. sand stored

Losses from sand storage pile

$$\frac{.04\ \text{lb}}{\text{ton}}\ (940) = 37.6\ \text{lbs}$$

$$\frac{.065\ \text{lb}}{\text{ton}}\ (940) = 61.1\ \text{lbs}$$

$$(0.05)(940) = 47\ \text{lbs}$$

$$0.11\ (940) = 103.4\ \text{lbs}$$

$$0.04\ (940) = \frac{37.6\ \text{lbs}}{286.7\ \text{lbs}}$$ sand emitted from storage pile.

Cost effectiveness of:

(a) enclosure

$$\frac{\$2,600}{286.7\ \text{lbs}} = \frac{\$9.06}{\text{lb}}$$

(b) enclosure with vent to fabric filter

$$\frac{\$21,000}{286.7\ \text{lbs}} = \frac{\$73.25}{\text{lb}}$$

(c) chemical suppression

$$\frac{\$2,200}{286.7\ \text{lb}} = \frac{\$7.67}{\text{lb}}$$

2.24 PETROLEUM REFINERIES

2.24.1 Process Description

Petroleum refineries vary in physical size and degree of complexity. Defining a typical refinery is difficult because few refineries have the same number and types of processes.[1] The processes used by a particular refinery are indicated by the capacity of that refinery, the type of crude being refined, the products to be produced and the degree of technological sophistication. This section will only briefly discuss the fundamental processes commonly found in the approximately 247 U.S. petroleum refineries.[2] Figure 2.24-1 illustrates the refinery operations that are discussed herein.

Crude oil storage is accomplished by the use of tanks of varying size and is designed to provide adequate quantities of feedstock for the smooth and uninterrupted operation of the refinery.[3]

Crude desalting is accomplished by one of two methods.[4] The first method, known as chemical desalting, is accomplished by water-wash desalting in the presence of chemicals, followed by heating and gravity separation. In the second method, electrostatic desalting, the water-wash emulsion is separated from the oil by a high voltage electrostatic field which simultaneously removes the impurities. Among the impurities removed by the desalting are ammonia, phenol, sulfides, suspended solids and salts that can damage or poison the catalysts used in the cracking operations. Electrostatic desalting is in greater use than chemical desalting.

Crude oil fractionation separates crude petroleum into intermediate fractions of specified boiling point ranges.[5] Several of the alternative methods of fractionation are topping, atmospheric and vacuum fractionation, and three-stage crude distillation.

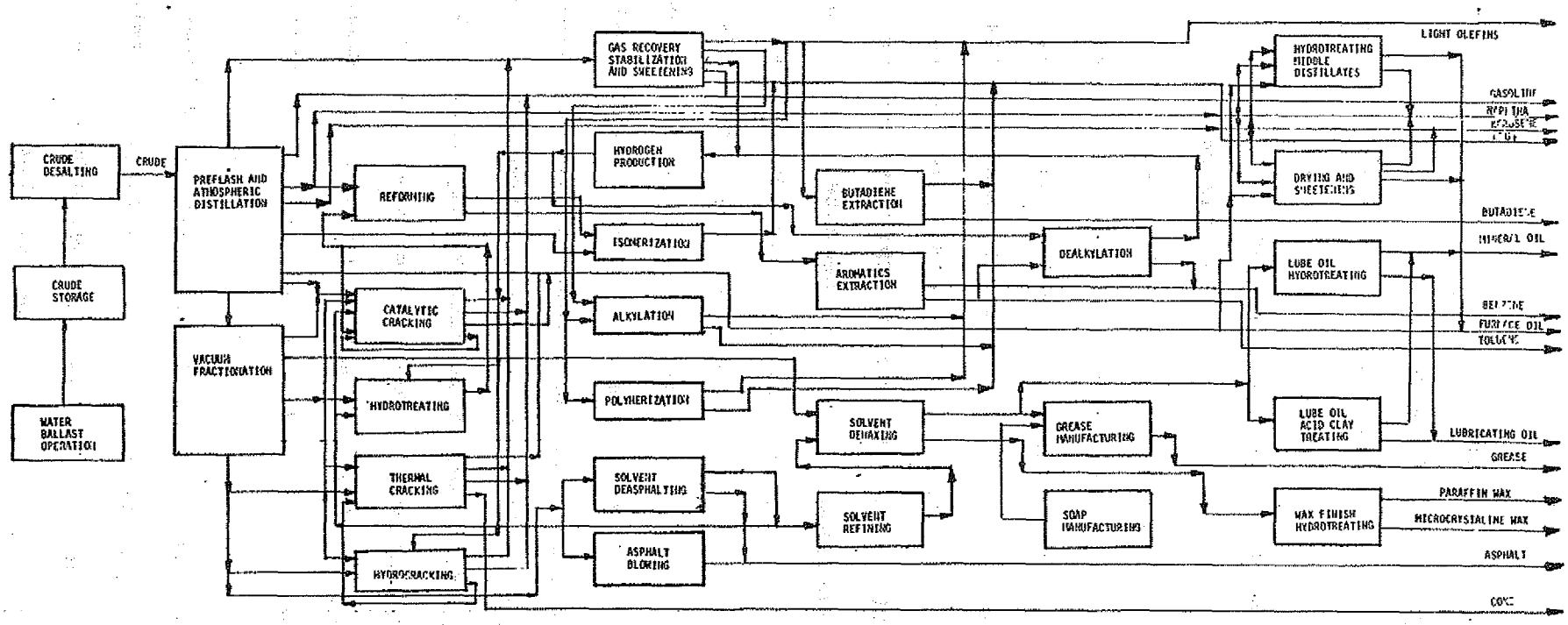

Figure 2.24-1. Simplified process flow diagram for petroleum refineries.

Topping is an economical method of separating the very light distillates from the crude oil by a process of skimming.[6] Skimming is usually carried out in a single column which has several side draw products or in a series of topping towers. This process is carried out at lower temperature and higher pressure conditions than would be required in atmospheric distillation.

In atmospheric and vacuum fractionation,[7] the crude oil is heated and subjected to an atmospheric fractionation process where the vaporized distillate is separated into gasoline, naphtha, kerosene, and light and heavy diesel oils. The bottoms from the atmospheric tower are heated and pumped through a vacuum fractionation where additional heavy gas and deasphalting feedstocks are recovered. Three stage crude distillation is a combination of equipment usually consisting of an atmospheric fractionating stage, and two vacuum fractionating stages.

The term thermal cracking includes visibreaking and coking operations.[8] In each of these operations, heavy gas-oil fractions (from vacuum stills) are broken down into lower molecular weight fractions by heating, but without the use of a catalyst. Typical thermal cracking conditions are 410°-600°C and 41.6-69.1 atmospheres pressure. Delayed coking is a form of thermal cracking where the feed is held at high temperatures long enough for the coke to form and settle out (425° - 490°C and 4 atmospheres pressure).[9] Products of thermal cracking include domestic heating oils, catalytic cracking feedstocks, and other light hydrocarbons.

Catalytic cracking breaks heavy fractions into lower molecular weight fractions and produces large volumes of high octane gasoline stocks, furnace oils and other useful middle molecular weight distillates.[10] The presence of the catalyst allows the cracking

to be achieved at lower temperatures and pressures than thermal cracking, and the catalyst inhibits the formation of undesirable polymerized products. Cracking catalyst may be composed of synthetic and/or natural silica-alumina, treated bentonite clay, Fullers' earth, alumina hydrosilicates and bauxite. Catalyst may come in the form of beads, pellets or powders which can be used in fixed, moving or fluidized beds.

Hydrocracking is a catalytic cracking process that is carried out in the presence of hydrogen.[11] Hydrocracking is performed at lower temperatures and pressures than catalytic cracking. The molecular weight distribution of the products is similar to catalytic cracking, but with reduced sulfur, nitrogen and olefin content.

Polymerization units are used to convert olefin feedstocks (primarily polypropylene) into higher octane polymer units.[12] The polymerization unit consists of a catalytic reactor, an acid removal section and a gas stabilizer. The catalyst used is phosphoric acid or sulfuric acid. Polymerization is currently a marginal process since alkylation is a more efficient conversion process.

Alkylation is the reaction of an isoparaffin and an olefin, in the presence of a catalyst, at carefully controlled temperatures and pressures, to produce a high octane alkylate for use as a gasoline blending component.[13] This process also produces propane and butane. Sulfuric acid is the most widely used catalyst.

Isomerization involves the rearrangement of a hydrocarbon chain in order to obtain higher octane motor fuels.[14] Higher octane fuels are usually obtained indirectly because the isomerization process converts normal paraffins to the isoparaffins (usually isobutane) that feed the alkylation process which ultimately produces high octane alkylates used in gasoline blending. The isomerization process

occurs by passing the heated normal paraffins through a catalytic hydrogen reactor which converts the n-paraffins to high octane isomers. Next, the hydrogen is removed and the synthetic isomers are retained as product.

Reforming is a process which is used to upgrade and convert low octane naphtha, cracked naphthas and heavy gasolines into desirable aromatics and high octane blending stocks.[15] This is basically a mild decomposition process carried out in the presence of a platinum catalyst. Naphthene rings are dehydrogenated to form aromatic rings during this process, with hydrogen being a significant by-product.

Solvent deasphalting is a form of solvent refining, the purpose of which is to recover lube or catalytic cracking feedstocks from asphaltic residuals and to produce asphalt as a by-product.[16] In propane deasphalting, which is the predominant solvent deasphalting technique used in the refinery industry, liquid propane and vacuum reduced crude are introduced into an extraction tower which produces a deasphated oil solution overhead and an asphalt bottoms product. Both of these product streams still contain propane which is then removed by means of a propane evaporator (for overheads) and a flash drum (for bottoms). The recovered propane is recycled to an extraction tower for reuse.

Solvent dewaxing is another form of solvent refining in which wax is removed from lubricating oil stocks by promoting crystallization of the wax.[17] Solvents which are used for this process include furfural, phenol, cresylic acid-propane (Duo-Sol), methyl ethyl ketone and sulfur-benzene. This process yields salt-free waxes, and wax-free lube oils, aromatics and recovered solvents.

Aromatic extraction is a solvent refining process used to obtain high purity aromatics by employing glycols and water as the solvent.[18] The solvent and hydrocarbons are introduced into a countercurrent extraction column. The vapor mixture is removed and stripped of solvent, leaving the aromatic compounds of benzene, toluene and xylene. The solvent is recovered and recycled to the extraction column.

Hydrotreating is a process where crude oil fractions, both straight run and cracked, are decomposed in the presence of hydrogen to produce petroleum fractions with low sulfur and nitrogen content.[19] The feed is treated with hydrogen, heated and charged to a catalytic reactor where the impurities and high grade products are separated.

Grease is primarily a soap and lube oil mixture, the manufacture of which requires careful attention to the qualitative aspects of the process itself.[20] The soap and oil are introduced to a high dispersion contactor or scraper kettle where the components are heated and mixed thoroughly. The finished grease is then packed or subject to further processing in the grease polisher as required by product specifications.

Drying and sweetening are forms of product finishing. Sweetening is a process where the sour odor of an oil is removed by oxidation of the mercaptans, hydrogen sulfide and dissolved free sulfur.[21] Drying is accomplished by salt filters or absorptive clay beds.

Lube oil finishing is a process that further refines solvent or dewaxed lube oil stocks by contact filtration so that the lube oil can be used for blending and compounding.[22] Clay absorbant is added to the oil, and the mixture is heated to the maximum contact pressure. The oil is then removed by filtration.

Blending and packaging are the final steps in producing a finished product. These are processes where additives of various types are blended into finished gasolines, oils and greases.[23] The blending is done in bulk form. These are relatively clean processes because care is taken that no product is lost through spillage.

Petroleum refineries have a large number of chemical processes, the great majority of which are only of passing interest since they are not sources of fugitive dust emissions. There are, in fact, very few sources of fugitive dust in petroleum refineries.[24] The potential sources of fugitive particulate emissions from petroleum refineries include plant roadways, parking areas, vehicular traffic and coke storage piles and material handling operations.

The fugitive particulate emissions resulting from plant roadways, parking areas and vehicular traffic are adequately discussed in Section 2.1.1 of this manual. Included in the referenced section are subsections that address the fugitive emission factors, control methods, and RACM selections for the types of sources.

The coke generated by the coking process is normally not a source of fugitive emissions because the coke is removed from the reactor in a wet state. The removal process consists of the use of horizontal water jets operated at high pressures.[25] The coke is then dewatered, dried and stored in piles. The storage of coke is a potential source of fugitive dust, and is discussed in Sections 2.1.2, 2.1.3 and 2.2.1 of this manual. The unloading, handling and transfer of coke are also discussed in the above-mentioned sections.

REFERENCES FOR SECTION 2.24

1. Harold R. Jones, Pollution control in the Petroleum Industry. New Jersey, 1973, p.31.

2. Development Document For Proposed Effluent Limitations Guidelines and New Source Performance Standards For Petroleum Refining, EPA 440/1-73/014, USEPA, December, 1973, p. 1.

3. Ibid, p. 25.

4. Ibid, p. 26.

5. Ibid, p. 26.

6. Kirk-Othmer, Encyclopedia of Chemical Technology, 2nd., Volume 15, (New York) 1970, p. 18.

7. Op. cit. Reference 1. p. 9.

8. Op. cit. Reference 2. p. 31.

9. Compilation of Air Pollutant Emission Factors (3rd. Ed.) USEPA, Research Triangle Park, North Carolina, 1977, §9.1-5.

10. Op. cit. Reference 2. p. 32.

11. Ibid, p. 34.

12. Ibid, p. 35.

13. Ibid.

14. Ibid, p. 37.

15. Ibid, p. 37.

16. Ibid, p. 38.

17. Ibid.

18. Ibid, p. 39.

19. Ibid.

20. Ibid, p. 40.

21. Ibid, p. 40.

22. Ibid, p. 43.

23. Ibid, p. 41.

24. Ibid, p. 43.

25. Op. cit. Reference 7, p. 23.

2.25 AGRICULTURAL CHEMICAL MANUFACTURING PLANTS

2.25.1 Process Description

In discussing this manufacturing category, a distinction should first be drawn between the fertilizer manufacturing industry and fertilizer mixing and blending plants. Mixing and blending plants (which are thoroughly discussed in Section 2.12 supra.) are characterized by the three distinct production techniques of ammoniation-granulation, bulk blending and liquid-mix,[1] all of which produce different types of fertilizers containing more than one of the primary plant nutrients (nitrogen, phosphorus and potassium).[2] These mixing and blending plant operations may or may not involve a chemical reaction between the raw materials.[3] Agricultural chemical manufacturing, on the other hand, will always involve a chemical reaction, and the end product is usually a fertilizer which contains just one of the primary plant nutrients. Sodium nitrate, anhydrous ammonia, urea, ammonium nitrate and potash are examples of single nutrient fertilizers.[4] Mono or diammonium phosphate and potassium nitrate are examples of manufactured multi-nutrient fertilizers.

Other factors that distinguish these two industries are the size and complexity of the production facilities. The fertilizer manufacturing plants tend to be quite larger than their mixing and blending counterparts in terms of average annual capacity and are much more sophisticated from a technical standpoint.

Since the only agricultural chemical manufactured in Ohio in any significant amount is urea, this guideline will address only those fugitive dust emission sources which are related to urea manufacture. The same problems will, however, be encountered in the manufacture of a solid form of fertilizer other than urea. Also, the solutions to those problems would be analogous to those discussed herein for urea.

Urea is manufactured either as a liquid or as a solid product.[5] The manufacture of urea in liquid form is not a significant source of fugitive dust emissions because the process itself only involves the handling and transfer of raw materials and finished products in their liquid phases. The solid urea manufacturing process includes all the processes that are needed for the production of urea solution in addition to the equipment and processes necessary to form the solid product (See Figure 2.25-1).

A typical plant capacity is 77,300 tons per year, and it is estimated that, on an industry-wide basis, 38 percent of the urea sold in the United States is in the liquid form. The remaining 62 percent of the urea is converted to solid prills or granules prior to sale.[6]

Urea is synthesized in a reactor by the reaction of liquid ammonia and carbon dioxide at high temperatures and pressures to first yield an intermediary product known as ammonium carbamate (NH_2COONH_4) which is simultaneously dehydrated in the same reactor vessel to form urea (NH_2CONH_2).[7] The aqueous urea solution is then concentrated by either crystallization or vacuum evaporation.[8] Solid urea is then made by prilling or by a form of granulation.[9]

In the prilling process, the concentrated urea solution is sprayed from a nozzle located inside a large cylindrical prilling tower (approximately 100 feet in height), and as the droplets fall they are cooled and solidified by an upward flow of air.[10] The solid prills, which generally range from 10-14 mesh,[11] fall onto a conveyor belt and are delivered to storage.[12] Conventional prilling towers produce approximately 15 percent of the solid urea in use today.[13]

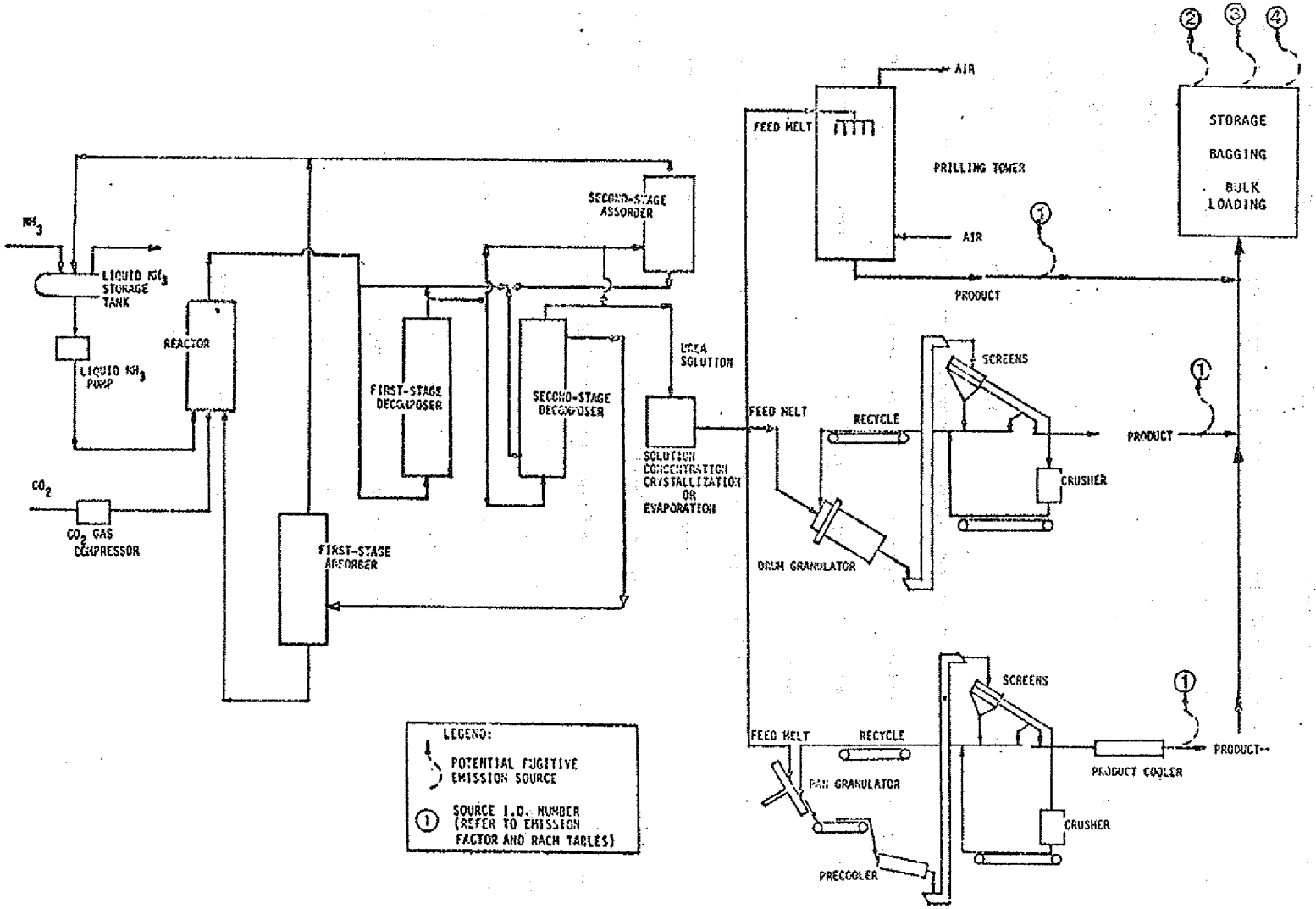

Figure 2.25-1. Simplified process flow diagram of the urea manufacturing process and associated fugitive particulate emission sources.

Due to the technical difficulties and large expenditures that companies are facing in bringing prilling towers into compliance with state and federal particulate emission regulations, granulation is becoming a more desirable method of producing solid urea.[14] The granules are produced by the solidification of successive layers of melt on the surfaces of seed particles.[15] As granules become the proper size (between 8 and 12 mesh),[16] they are removed from the granulation process and conveyed to screens for sizing and storage.[17]

It should be noted that, as a general rule, granules will generate less dust and will cake less during handling and storage than prilled products because granules are stronger and more abrasion resistant.[18] Granulation, however, cannot produce granules small enough for use as a feed grade urea; therefore, prilling will remain a necessary production process.[19]

The final product is cooled, if necessary, sized and stored indoors in piles via an overhead conveyor. Later this material is transferred from storage to bulk loading or bagging by conveyor belts.[20] The storage, loading and shipping operations are normally conducted in the same building.[21]

Regardless of which method is used to manufacture the solid product, the sources of fugitive dust emissions are essentially the same for both processes, because the solids are subject to virtually the same handling, transfer and loading operations.

The fugitive dust emissions from urea manufacturing plants are indicated in Figure 2.25-1, and result from four sources:

1. material transfer and conveying operations,
2. storage,
3. bagging, and
4. bulk loading.

2.25.2 Fugitive Dust Emission Papers

Although particulates are emitted during storage, material handling, bagging and bulk loading operations, individual fugitive dust emission factors for these specific urea manufacturing operations are unavailable.

However, in one instance, since no quantitative test data was available, a worst case estimate was made for bagging and bulk loading operations based upon a known particle size distribution for prilled urea. The size distribution data indicated that approximately 0.015 percent of the prilled product was less than 44 μm in size;[22] therefore, it was assumed that all of these particles would become airborne during the bagging and bulk loading operations. This assumption yielded an estimated combined emission factor of 0.30 pounds of particulate per ton of bulk loaded or bagged product. Although, the actual emission factor may be less than the estimated value of 0.30 pounds per ton, this worst case estimate will be used for bulk loading. This fugitive dust emission factor is presented in Table 2.25-1. A similar emission factor was not used for bagging operations, since such factor represents operation in outdoor areas. Generally bagging operations are performed indoors.

The emission factor (designated as Source 1) which reflects the amount of dust emissions generated by the belt conveyors and material transfer points is also known. The fugitive dust emission rates will vary depending upon the conveyor used, belt speed, and type of material being transferred (i.e., prills, granules, coated, uncoated).[23]

Fugitive dust losses will also occur at storage piles. It is estimated that 67 percent of the losses occur as a result of loading onto piles, equipment movement in the storage area and loadout from piles.[24]

TABLE 2.25-1. FUGITIVE DUST EMISSION FACTORS FOR UREA MANUFACTURING

Source	Emission factor	Reliability rating	Reference
① Transfer and conveying	NA	-	-
② Storage	NA	-	-
③ Bagging	NA	-	-
④ Bulk loading	0.3 lb/ton loaded	E	22

2.25.3 Particle Characterization

Fugitive particulate emissions from solid urea manufacturing facilities are 99 percent urea in composition ($CO\ [NH_2]_2$).[25] Urea is a colorless crystal or powder with a molecular weight of 60.1 gram/gram mole, a melting point of 132.7°C and a density of 1.335 grams/cm^3.[26] It is not considered a hazardous material, and no threshold limit value (TLV) has been assigned to it.[27]

Biuret [$(NH_2\ CO)_2\ NH$] is the main impurity present in solid urea at concentrations between 0.1 and 1.0 percent, while other impurities are estimated at less than 0.1 percent.[28] Biuret is formed when solid urea is heated to a temperature of 130°C at atmospheric pressure.[29] Although biuret is toxic to plant life, it is not hazardous to animals, and no TLV has been assigned to it either.[30]

No data was found concerning the particulate size distributions for the fugitive dust emissions.

2.25.4 Control Methods

A summary of the fugitive emission control alternatives is presented in Table 2.25-2.

Telescopic chutes or loading spouts are used during the bulk loading of railroad cars to control the fugitive dust that is generated. The adjustable spouts extend into the openings of the railroad cars, thereby reducing the free fall distance of the urea during the loading operation. Telescopic spouts can also be aspirated so as to capture the emissions generated and vent them to a fabric filter.

A fabric filter system can be used to contain emissions generated by the in-plant material handling, i.e., the conveyor belts, transfer points and bagging. Fugitive emissions generated in handling the urea during transfer and storage can also be reduced by closing doors and windows in the storage and loading areas and minimizing product spillage.

2.25.5 Recommended Reasonably Available Control Measures (RACM)

The recommended RACM for each fugitive emission source are listed in Table 2.25-2. The RACM's were selected on the basis of the degree of controls needed to meet state emission control regulations, current practice in the industry, ease of application or installation, and economics.

An adjustable loading spout which is aspirated to a fabric filter is recommended for the bulk loading of railroad cars. These adjustable spouts will minimize the free fall distance during the loading process, thereby eliminating a large portion of the fugitive emissions that would otherwise occur. The aspiration device will then capture the dust that is actually generated. These are relatively inexpensive control devices which will provide a substantial measure of protection at a reasonable cost.

A hooding system over transfer points, conveyor belts, bagging, and storage operations which is ducted to a fabric filter is recommended for use in the prevention of fugitive emissions from these operations.

TABLE 2.25-2. A SUMMARY OF THE CONTROL ALTERNATIVES, EFFICIENCIES AND COSTS, AND THE RACM SELECTIONS FOR FUGITIVE DUST EMISSIONS FROM AGRICULTURAL CHEMICAL MANUFACTURING PLANTS

Fugitive dust sources	Control alternatives	Control efficiency %	Control costs, Jan. 1980, $		Cost benefit $/lb	RACM selection
			Capital	Annualized		
(1) Transfer and conveying	Hooding, vent to fabric filter	99[a]	429,300[b]	57,500[b]	-	Hooding, vent to fabric filter
(2) Storage	Hooding, vent to fabric filter	99[a]	c	c	-	Hooding, vent to fabric filter
(3) Bagging	Hooding, vent to fabric filter	99[a]	c	c	-	Hooding, vent to fabric filter
(4) Bulk loading	Telescopic chutes	75[a]	4,500[d]	900[d]	-	Telescopic chutes with aspiration to fabric filter
	Telescopic chutes with aspiration to fabric filter	99[a]	e	e	1.25[f]	

a Engineering estimate.

b Estimated cost for hooding, duct work and 124,000 acfm fabric filter. See Appendix. Includes control material handling, storage, bagging and bulk loading.

c Cost of control technique is included under the control alternative for transfer and conveying.

d Estimated cost of one telescopic chute; see Section 2.12.4 of this guideline.

e Cost of aspiration is included under the control alternative for transfer and conveying. This cost does not include the cost of the telescopic chutes.

f Cost of analysis based upon a plant production of 150,000 tons/year.

REFERENCES FOR SECTION 2.25

1. PEDCo, Environmental, Inc., Reasonable Available Control Measures for Fugitive Dust Sources, Ohio EPA, March 1980, Section 2.12.1.

2. Monsanto Research Corporation, Source Assessment Fertilizer Mixing Plants, March 1976, EPA#600/2-76-032C, p. 3.

3. Ibid. p. 4.

4. Kirk-Othmer, Encyclopedia of Chemical Technology, (New York, 1968) Vol. 9, pg. 50-53.

5. Search, W.J., and Reznik, R.B., Source Assessment: Urea Manufacture. USEPA, Research Triangle Park, NC 1977. EPA-600/2-77-107, p. 12.

6. Ibid. p. 7.

7. Ibid. p. 12.

8. Ibid. p. 30.

9. Ibid. p. 31.

10. Ibid. p. 31.

11. Op. cit. Reference 18. p. 116, figure 2.

12. Op. cit. Reference 5. p. 31.

13. Ibid. p. 5.

14. Richard P. Ruskan, "Prilling vs. Granulation", Chemical Engineering, June 7, 1976, 114.

15. Ibid. p. 115.

16. Ibid. p. 116.

17. Ibid.

18. Op. cit. Reference 14.

19. Ibid.

20. Op. cit. Reference 5. p. 38.

21. Ibid. p. 45.

22. Ibid. p. 47.

23. PEDCo Environmental, Inc., Technical Guidance for Control of Industrial Process Fugitive Particulate Emissions, USEPA 450/3-77-010, Research Triangle Park, NC 1977. p. 2-6.

24. Ibid. p. 2-32.

25. Op. cit., Reference 5. p. 39.

26. Sax, Irving N., Dangerous Properties of Industrial Materials, 5th edition, (New York, 1979), p. 467.

27. Op. cit., Reference 5. p. 39.

28. Ibid.

29. Ibid.

30. Ibid. p. 83.

APPENDIX FOR SECTION 2.25

Calculations for control alternatives and resulting cost benefits for urea manufacturing operations.

Dust sources to be controlled and the air flow estimated.

1. Conveyor belt transfer points:
   (100 m^3/min of air)(10 transfer points) = 1000 m^3/min

2. Bagging operations:
   (400 m^3/min)(2 bag loaders) = 800 m^3/min

3. Bulk loading operation:
   (400 m^3/min)(2 chutes) = 800 m^3/min

4. Storage area estimate 800 m^3/min

Total air flow required = 3500 m^3/min
converting to acfm = 124,000 acfm

Using the guidelines provided in "Capital and Operating Costs of Selected Air Pollution Control System" GARD, Inc., EPA-450/3-76-014 May 1976, the following cost estimates were obtained.

Table 2-2 air to cloth ratio is 8 or 9 for a pulse jet fabric filter used in phosphate fertilizer manufacturing

Page 4-9 net filter cloth area = $\frac{\text{gas volume entering baghouse}}{\text{required air to cloth ratio}}$

net filter cloth area = $\frac{124{,}000 \text{ acfm}}{9}$

= 13,800 ft^2

Table 4-1 and 4-2 determines the cost of the filter cloth

$$(13{,}800\ ft^2)(1.09)\left(\frac{.55}{ft^2}\right) = \$8{,}260$$

Figure 4-7 on page 4-10 gives the cost of a pulse jet baghouse as $95,000

Figure 4-17 and 4-19 and the equations on page 4-25 provide the data necessary to calculate the cost of the ductwork.

Bulk loading-assume 4'x4' hood requires 40 ft^2 of 10 Ga. Carbon steel.

labor $200
material $100

60' straight duct of 24" diameters 1/8" plate at $25 per foot - material $1500

Material Handling and transfer and bagging

Fig. 4-18, 19	10 hoods @ 4'x4' 800 ft^2 mtl. $2500 labor $1600 mtl. cost	1 hood @ 4'x8' 250 ft^2 mtl. $350 labor $100 mtl. cost

Figure 4-21 assume use of 300' of 24" duct made of 1/8" plate at $25 per foot
$7500 -

Total hood and duct cost
$10,800 material
$ 3,100 labor
$13,900

Fan and motor -

Figure 4-40 Class III fan is used with 98" fan wheel diameter operating at 1600 RPM costs $15,000

Figure 4-41 a drip proof motor of 125 BHP will cost $18,000

Total Cost of Fan and Motor is $33,000

Total Equipment Purchse Price
effective 1975 is $150,100

page 3-1

1)	Equipment costs (control device + auxiliaries)	=$150,100
2)	Tax and freight (@7% of 1)	= 10,500
3)	Installation costs (Table 4-12) (75% of 1)	= 112,500
4)	Subtotal (1 + 2 + 3)	= 273,100
5)	Engineering (@ 10% of 4)	= 27,310
6)	Subtotal (4 + 5)	= 300,400
7)	Contingencies (@ 10% of 6)	= 30,000
8)	Total capital costs (6 + 7)	= 330,400

prices effective December, 1975

Total capital cost can be updated to January 1980 dollar values using the Chemical Engineering Cost Index, plus an assumed annual escalation rate of 10 percent (as per PEDCo memo attached).

$$\frac{(\text{January } 1980 - 249.6)}{(\text{January } 1976 - 192.1)}(330{,}400 \text{ effective Dec. } 1975)$$

January 1980 price of $429,300

Page 3-3 Uniform Annual Equivalent = $PW \frac{[i(1 + i)^n]}{[(1 + i)^{n-1}]}$

PW = present worth
n = # periods over which annual payments take effect
i = discount rate

assume cost of capital to be 12% and equipment life 20 years

UAE = (429,300)(.1338) = 57,450 ≈ 57,500

Cost benefit analysis:

Emission factor = $\frac{0.30 \text{ lbs}}{\text{ton bulk loaded}}$

annual production rate = 151,600 tons

pounds emitted = 45,500 lbs.

Cost benefit = $\frac{\text{annual cost of control}}{\text{lbs TSP removed}}$

$= \frac{\$57,500}{45,500} = \frac{\$1.26}{\text{lb}}$

2.26 BULK GASOLINE TERMINALS AND PLANTS

2.26.1 Process Description

Bulk gasoline terminals receive gasoline from refineries by way of pipeline, tanker or barge; store it in aboveground storage tanks; and subsequently dispense it via tank trucks to bulk gasoline plants and service stations for further distribution.[1]

The bulk storage of gasoline is accomplished by the use of various types of closed cylindrical tanks which are designed to prevent the escape of volatiles and minimize the contamination of the stored material.[2]

The capacities of bulk terminal storage tanks range from 500,000 to 5,000,000 gallons per tank.[3] An average terminal has 4.5 storage tanks.[4]

Each terminal contains one or more loading racks which are used to load the incoming tank trucks.[5] These racks are equipped with an array of process control equipment to control flow rates and assure safety in operation.[6] The majority of gasoline loading is accomplished by use of the top submerged filling method.[7] The other commonly used method of loading tank trucks is the bottom fill method.[8] Another method, not in common use in Ohio, is the splash loading method which, as the name suggests, results in significant turbulence and liquid-vapor contact during the loading process.[9]

There were an estimated 50 bulk gasoline terminals in Ohio as of 1977.[10] The daily throughput per terminal ranges from 30,000 gallons per day to over 600,000 gallons per day.[11]

Bulk gasoline plants receive gasoline from the bulk gasoline terminals via tank trucks and subsequently distribute the gasoline to service stations and other small commercial accounts.[12]

The capacities of bulk plant storage tanks range from 13,000 to 20,000 gallons per tank. An average facility has three storage tanks having an average, total storage capacity of 49,000 gallons.[13]

The daily throughput for a bulk plant varies from 2,000 to 20,000 gallons per day.[14] A USEPA study indicates that, on a nationwide basis, 50 percent of all bulk plants have a daily throughput of less than 4,000 gallons per day.[15] It is assumed that this figure also characterizes the size distribution of bulk gasoline plants in Ohio.[16]

In addition to storage tanks, the bulk plants also have loading racks for the filling of tank trucks.[17] The splash-fill method is used in 50 percent of the bulk plants, while submerged filling is used in the other 50 percent.[18]

Figures 2.26-1 and 2.26-2 are simplified process flow diagrams of a typical bulk gasoline plant and terminal. The various loading systems are shown in Figures 2.26-3 through -5.

Fugitive dust emissions from a bulk gasoline plant or terminal result primarily from vehicular traffic on paved and unpaved roads within the facility. The available emission factors, control technologies and RACM selections for these emissions are discussed in detail in Section 2.1.1 of this manual.

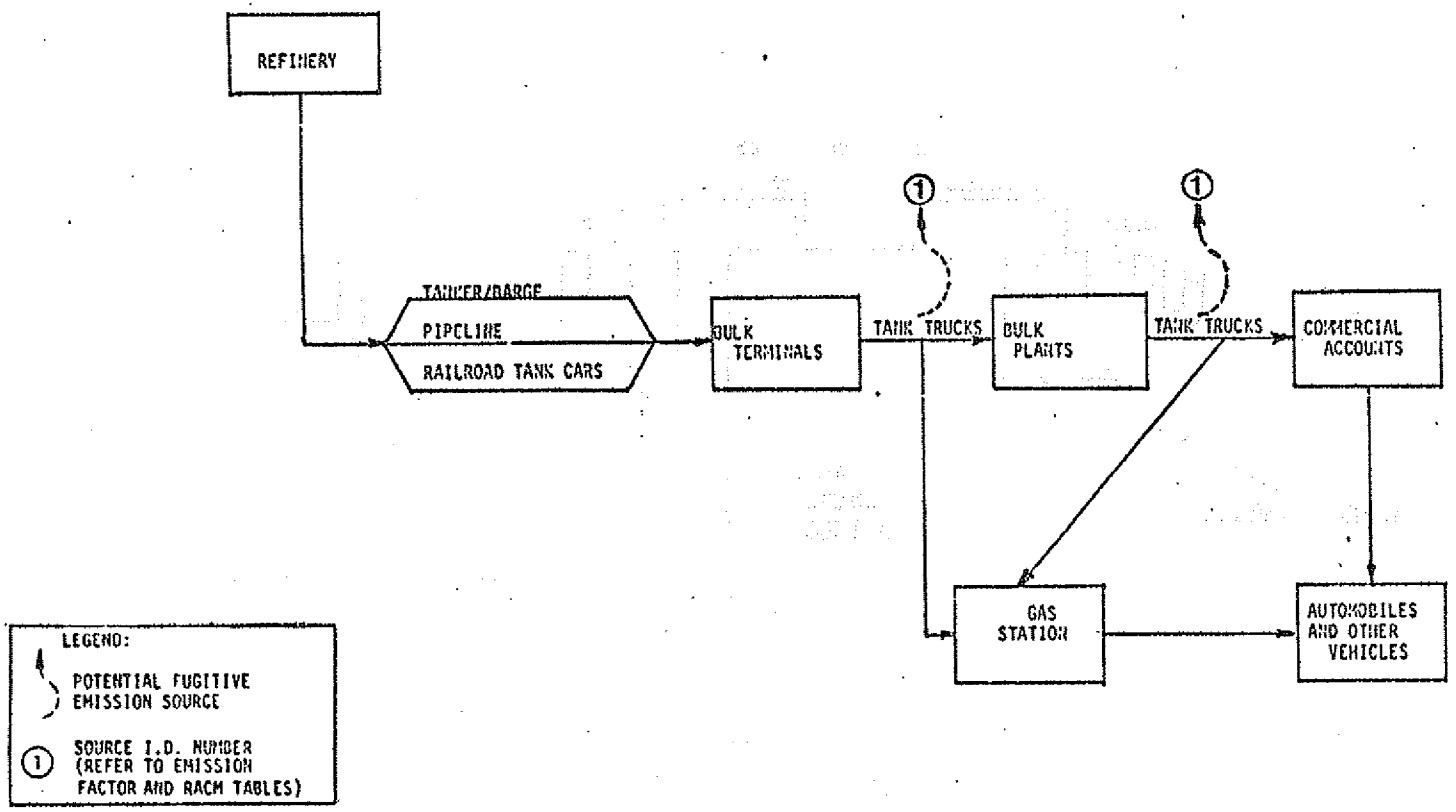

Figure 2.26-1. Simplified process flow diagram for bulk gasoline distribution and storage and associated fugitive particulate emission sources.

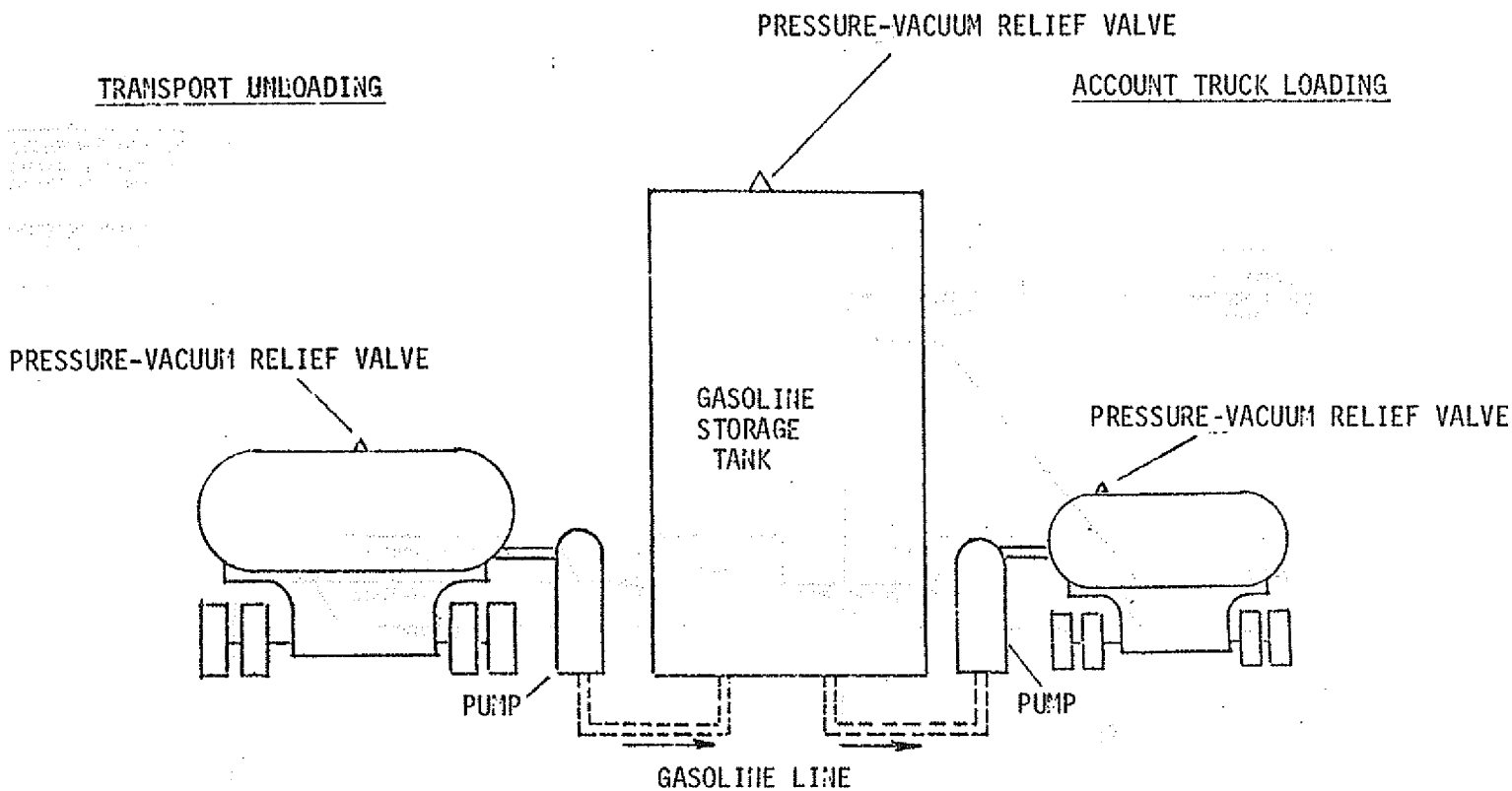

Figure 2.26-2. Simplified process flow diagram for bulk gasoline storage.

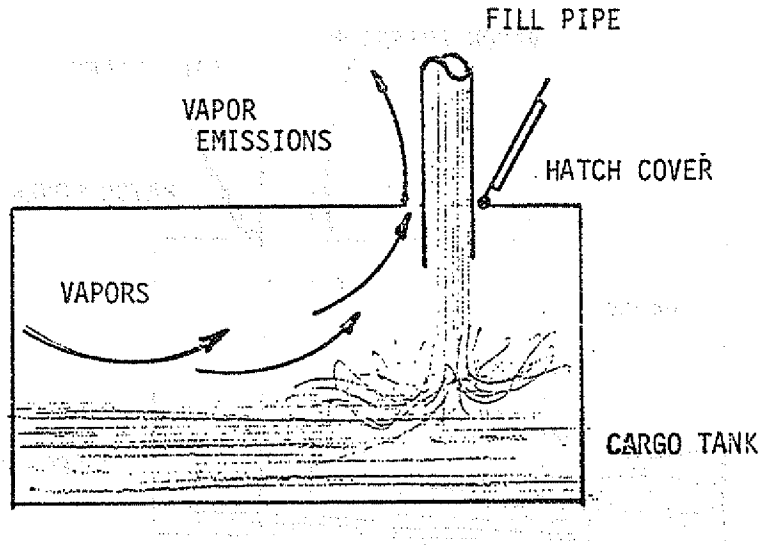

Figure 2.26-3. Splash loading method.[19]

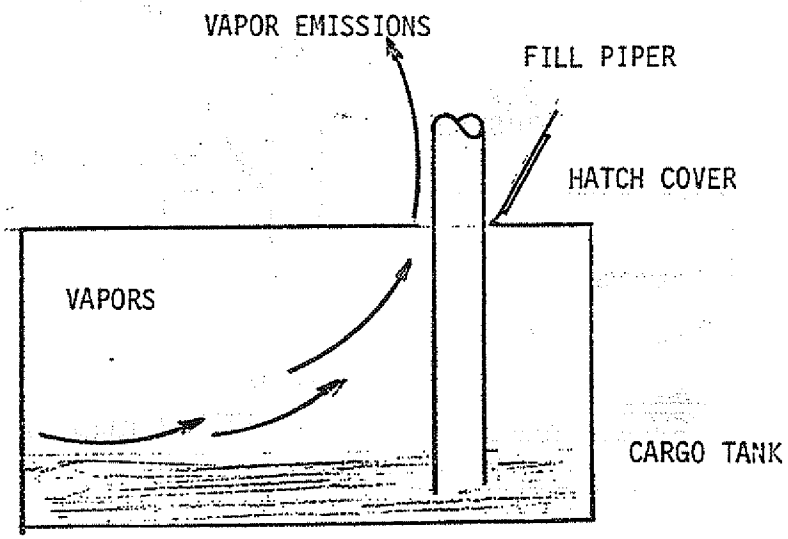

Figure 2.26-4. Submerged fill pipe.[19]

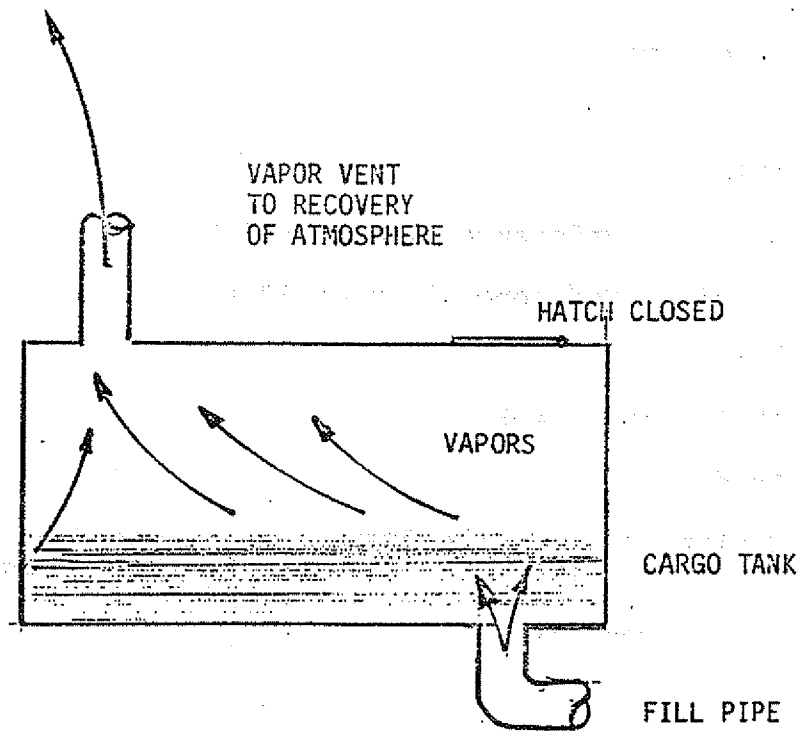

Figure 2.26-5. Bottom fill loading.[19]

REFERENCES FOR SECTION 2.26

1. Booz, Allen & Hamilton, Inc. 1978 Economic Impact of Implementing RACT Guidelines in the State of Ohio. USEPA, EPA 905/5-78-003, Volume II Chicago, Ill. page 13-8.

2. Compilation of Air Pollution Emission Factors, USEPA No. AP-42 Research Triangle Park, North Carolina August 1977, page 4.3-1.

3. Op.cit. Reference 1, page 13-8.

4. Ibid. page 13-9.

5. Ibid. page 13-8.

6. Ibid. page 13-9.

7. Ibid.

8. Ibid.

9. Op.cit. Reference 2, page 4.4-3.

10. Op.cit. Reference 1, page 13-6.

11. Ibid.

12. Ibid. page 14-8.

13. Ibid.

14. Control of Volatile Organic Emissions From Bulk Gasoline Plants, USEPA, EPA-450/2-77-035 December 1977, page 2-1.

15. Ibid. page 14-7.

16. Ibid.

17. Op.cit. Reference 1, page 13-6.

18. Ibid.

19. Op.cit. Reference 2, page 4.4-3.

2.27 CARBON BLACK PLANTS

2.27.1 Process Description.

Carbon black refers to a large family of industrial carbons manufactured by the partial combustion or thermal decomposition of hydrocarbons in the vapor phase.[1] In contrast, coke is manufactured by the pyrolysis of solids.[2]

In the United States, two major processes are used for the manufacture of carbon black: the oil furnace process and the thermal process.[3]

In the thermal process, natural gas is injected into a heated refractory chamber where it decomposes to form carbon black.[4] Because this reaction is endothermic, it is necessary to alternately use the natural gas to bring the furnace to the proper temperature and then inject the gas into the furnace for decomposition. This is done in a cyclical process.[5]

In the oil furnace process, a liquid hydrocarbon feedstock is injected continuously into the combustion zone of a natural gas fired furnace where it is decomposed to form carbon black.[6] This process accounts for approximately 90% of the total carbon black produced in the United States today.[7]

Currently, there are 30 carbon black plants in this country that use the oil furnace process. These plants have a combined capacity of 2.1×10^6 tons/yr.[8] Individual plant capacities vary from 25.3×10^3 to 195.1×10^3 tons per year.[9]

A "typical" carbon black plant is one that uses the oil furnace process and which has an annual production capacity of 5.7×10^4 tons/yr.[10,11]

Feed materials used in the oil furnace process consist of natural gas, pre-heated crude oil and air.[12] The oil is pre-heated to 200°C - 370°C.[13] The preferred feedstock oil is high in aromaticity, is free of coke or other gritty materials and contains low levels of asphaltenes, sulfur and alkali metals.[14]

The reactor for this process consists of a refractory lined steel furnace which is from 1.5m to 9m in length and 0.15m to 0.76m in internal diameter.[15] The natural gas is burned to completion to produce temperatures of 1320°C to 1540°C.[16] The preheated oil is atomized with air and sprayed into the center of the zone of the hot combustion gases.[17] The oil is cracked to hydrogen, carbon and by-products consisting of carbon oxides, water, methane, acetylene and other hydrocarbons.[18] The specific design and construction features of various reactors are dictated by product specifications and economics.[1] The reactor converts 35 to 65 percent of the feedstock carbon content to carbon black, depending upon the type of feedstock and the desired product quality.[20]

The hot combustion gases from the reactor, which contain the suspended carbon black particles, are initially cooled to about 540°C by a water spray in a quench area located in the reactor outlet.[21] This gas stream is ultimately cooled to a temperature of 230°C by a quench tower.[22]

The carbon black is recovered from the reactor effluent stream by use of a fiberglass type fabric filter in a baghouse.[23] The collected carbon black is subsequently passed through a hammermill and then pneumatically conveyed to a cyclone and bag filter combination where the carbon black is collected in a surge bin.[24]

Next, the carbon black is fed to a pelletizer via a screw conveyor.[25] The resulting pellets are spherical with a 1.6mm to 3.2mm diameter.[26] The pellets are then conveyed to a dryer for the removal of water.[27]

The dried carbon black pellets are screened and conveyed to large storage bins via bucket elevators.[28] The oversized particles are recycled to the hammermill and reprocessed.[29] From the storage bin the product can be bagged or bulk loaded into hopper-type railroad cars.[30]

Figure 2.27-1 is a simplified process flow diagram of the oil furnace process.

Sources of fugitive dust emissions within the carbon black industry include roadways, vehicular traffic, bulk loading of railroad cars, bagging operations, and the storage of pelletized carbon black.

2.27.2 Fugitive Dust Emission Factors

Unfortunately, there is a lack of information regarding both the quantity and quality of the carbon black particles which are lost to the atmosphere from each of the sources of fugitive dust.

One literature source does give 0.2 lb/ton as a fugitive emission factor for a representative carbon black plant.[31] This emission factor, however, includes emissions generated by the following:[32]

1. cleaning of clogged process equipment;
2. leaks in all process equipment including vents on storage bins, and the pneumatic conveying system;
3. spillage during the bulk loading of boxcars or bagging operations; and
4. general maintenance and repair work.

Therefore, the above-mentioned fugitive emission factor is rendered less meaningful by the fact that it combines too many emission sources, some of which cannot be considered as sources of fugitive dust.

2.27.3 Particle Characterization

Carbon black prior to pelletization consists of very small particles, 18nm-55nm in diameter, with a density of 24-59 kg/m^3.[33] These particles have a fluffy character and generally consist of 90 to 99 percent elemental carbon, with oxygen, hydrogen and sulfur comprising the other major constituents.[34]

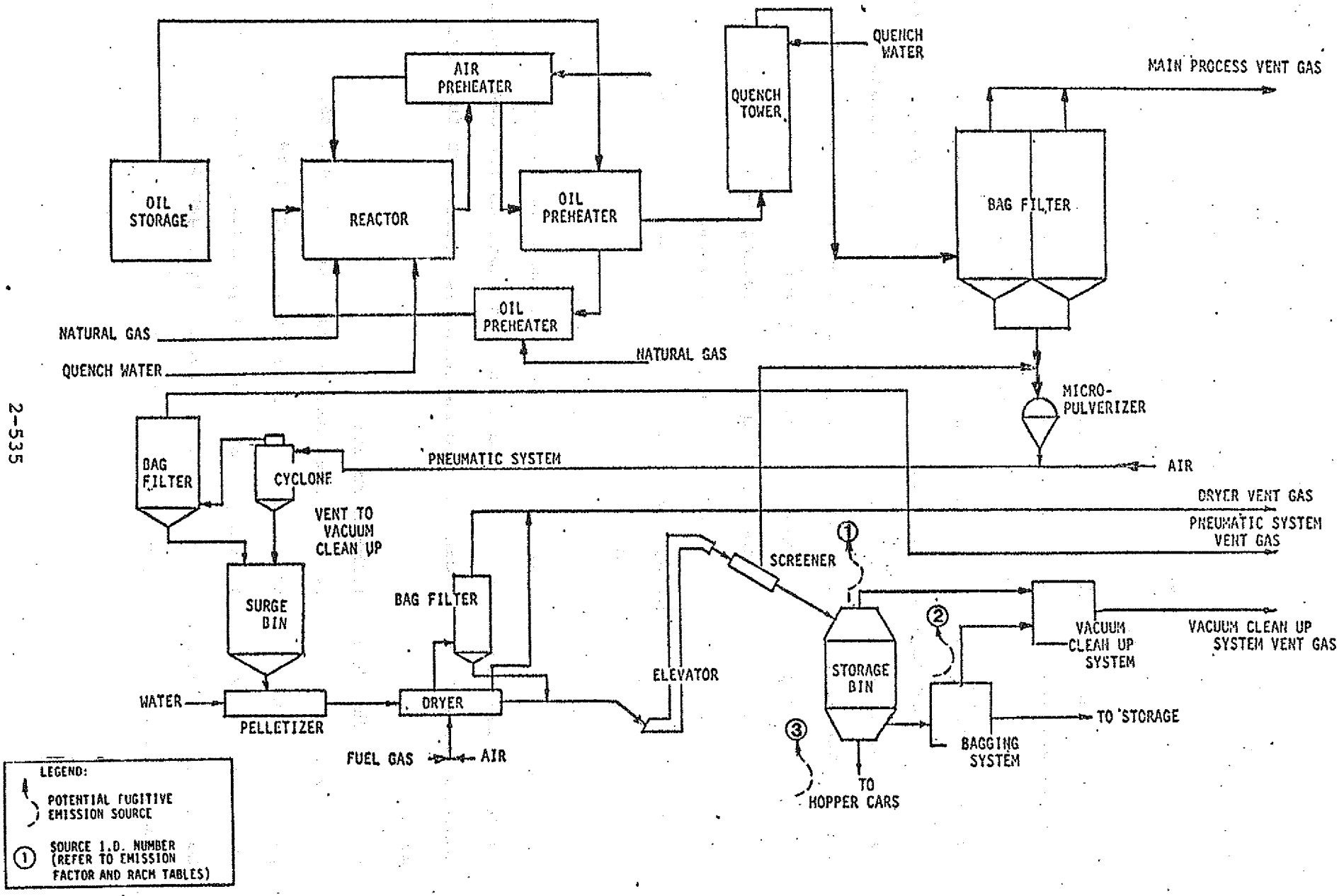

Figure 2.27-1. Simplified process flow diagram for carbon black plants and associated fugitive particulate emission sources.

There is no evidence of carbon black toxicity in humans, despite the fact that it contains trace amounts of polynuclear aromatic compounds known to be carcinogenic.[33]

The physical characteristics, in terms of size and size distribution, of those particles that are generated when pelletized carbon black is handled and stored are unknown. Their chemical properties are identical with the unagglomerated carbon black.

2.27.4 Control Methods

Controls are generally employed to reduce the amount of carbon black that is emitted into the atmosphere from storage bins. If a plant has a vacuum clean-up system (2/3 of all U.S. plants have such systems) that is used to collect carbon black dust that is emitted or accidentally spilled from in-plant process machinery, then the storage bin can be vented to this existing clean-up system. An alternative would be to install a fabric filter unit on each vent of the storage tank which would help to prevent carbon black from entering the atmosphere.

Fugitive emissions that result from the loading of railroad hopper-cars and bagging operations can be controlled by the use of a set of carefully placed vacuum hoses connected to the existing plant vacuum clean-up system. The emissions from bulk loading may also be vented to the existing bagging machine exhaust system which is used to collect the carbon black dust during bagging operations. This dust is discharged into a small pulsation-type bag filter. Finally, some plants will employ two separate pulse-jet bag filters with one designated to capture the dust emissions that result from bulk loading of railroad cars and the other to control dust emissions from the bagging operation. All recovered carbon black is returned to the process.

The control of fugitive emissions from roadways is adequately discussed in Section 2.1 of this guide.

2.27.5 Recommended Reasonably Available Control Measures (RACM)

Since specific data regarding fugitive emissions from carbon black plants are unavailable, general industrial practice will be used as an indicator of what RACM should be.

For storage bins, RACM is either venting the bins to an existing vacuum clean-up system or installing a non-aspirated fabric filter over the vent to collect the particulate emissions.

For the bulk loading of railroad cars, a vacuum clean-up system can be used to prevent an excessive build-up of carbon black dust and to capture any spilled carbon black. Other alternatives include installation of a pulse-jet fabric filter system or venting the emissions to the bagging machine exhaust system.

The bagging operation may be ducted to the existing vacuum clean-up system or use may be made of vacuum bagging systems that are hermetically sealed to prevent emissions of carbon black during bagging. Finally, a separate pulse-jet type fabric filter may be used to collect the emissions from this fugitive dust source.

Table 2.27-1 summarizes the available control technologies, their effectiveness and RACM selections.

TABLE 2.27-1. A SUMMARY OF THE CONTROL ALTERNATIVES, EFFICIENCIES AND COSTS, AND THE RACM SELECTIONS FOR FUGITIVE DUST EMISSIONS FROM CARBON BLACK PLANTS

Fugitive dust sources	Control alternatives	Control efficiency, %	Control costs, Jan. 1980, $		Cost benefit, $/lb	RACM selection
			Capital	Annualized		
(1) Vents on storage bins	Aspirate bins to vacuum clean-up system	99+	-	-	NA	All the control alternatives listed for the fugitive dust sources can be considered RACM for that dust source. No single control alternative was chosen as RACM since these control alternatives are highly plant specific.
	Install fabric filter unit over storage bin vents	99+	-	-	NA	
(2) Carbon black bagging operation	Bagging machine exhaust system	99+	-	-	NA	
	Aspirate to vacuum clean-up system	99+	-	-	NA	
	Install pulse jet fabric filter system	99+	-	-	NA	
(3) Bulk loading of hopper cars	Aspirate to vacuum clean-up system	99+	-	-	NA	
	Install pulse jet fabric filter system	99+	-	-	NA	
	Vent to bagging machine exhaust system	99+	-	-	NA	

REFERENCES FOR SECTION 2.27

1. Kirk-Othmer, Encyclopedia of Chemical Technology, 3rd Edition, Volume 4, Interscience Publishers, New York. p. 631.

2. Ibid.

3. Source Assessment: Carbon Black Manufacture. Monsanto Research Corporation, Dayton, Ohio. Prepared for U.S. Environmental Protection Agency, Office of Research and Development, Washington, D.C. October, 1977. p. 1.

4. Ibid.

5. Ibid.

6. Ibid.

7. Ibid. p. 4.

8. Ibid. p. 5.

9. Ibid. p. 5.

10. Ibid. p. 7.

11. Ibid. p. 81.

12. Ibid. p. 27.

13. Ibid. p. 32.

14. Op. cit. Reference 1. p. 645.

15. Op. cit. Reference 3. p. 32.

16. Ibid.

17. Ibid. p. 35.

18. Ibid.

19. Op. cit. Reference 1. p. 649.

20. Op. cit. Reference 3. p. 38.

21. Ibid. p. 41.

22. Ibid.

23. Ibid. p. 42.

24. Ibid. p. 44.

25. Ibid.

26. Ibid. p. 45.

27. Ibid.

28. Ibid.

29. Ibid.

30. Ibid.

31. Ibid. p. 80.

32. Ibid.

33. Ibid. p. 6.

34. Ibid. p. 17.

35. Op. cit. Reference 1. p. 654.

2.28 MUNICIPAL INCINERATION

2.28.1 Process Description

Municipal incineration is a controlled combustion process for reducing municipal refuse to gases and a residue containing little or no combustible material. Although most municipal incinerators are designed solely to reduce the volume of refuse for ultimate disposal, the heat generated by the incineration process can also be efficiently utilized for production of electric power or steam.

During combustion, the moisture in the refuse is first evaporated, and then the combustible portion is vaporized and oxidized. The major end products of incineration are carbon dioxide, water vapor and non-combustible ash.

The component subsystems of a municipal incinerator are:

(1) refuse holding and charging system,

(2) combustion chambers,

(3) air supply system,

(4) residue handling system, and

(5) air pollution control equipment.

These components are shown schematically in Figure 2.28-1, along with the associated fugitive dust sources.[1]

There are numerous municipal incinerator designs in use, employing different grate types or combustion chamber configurations. Common mechanical grate types are traveling, reciprocating and rocking. Furnace types include rectangular and rotary kiln, with either refractory or waterwall interiors.[2]

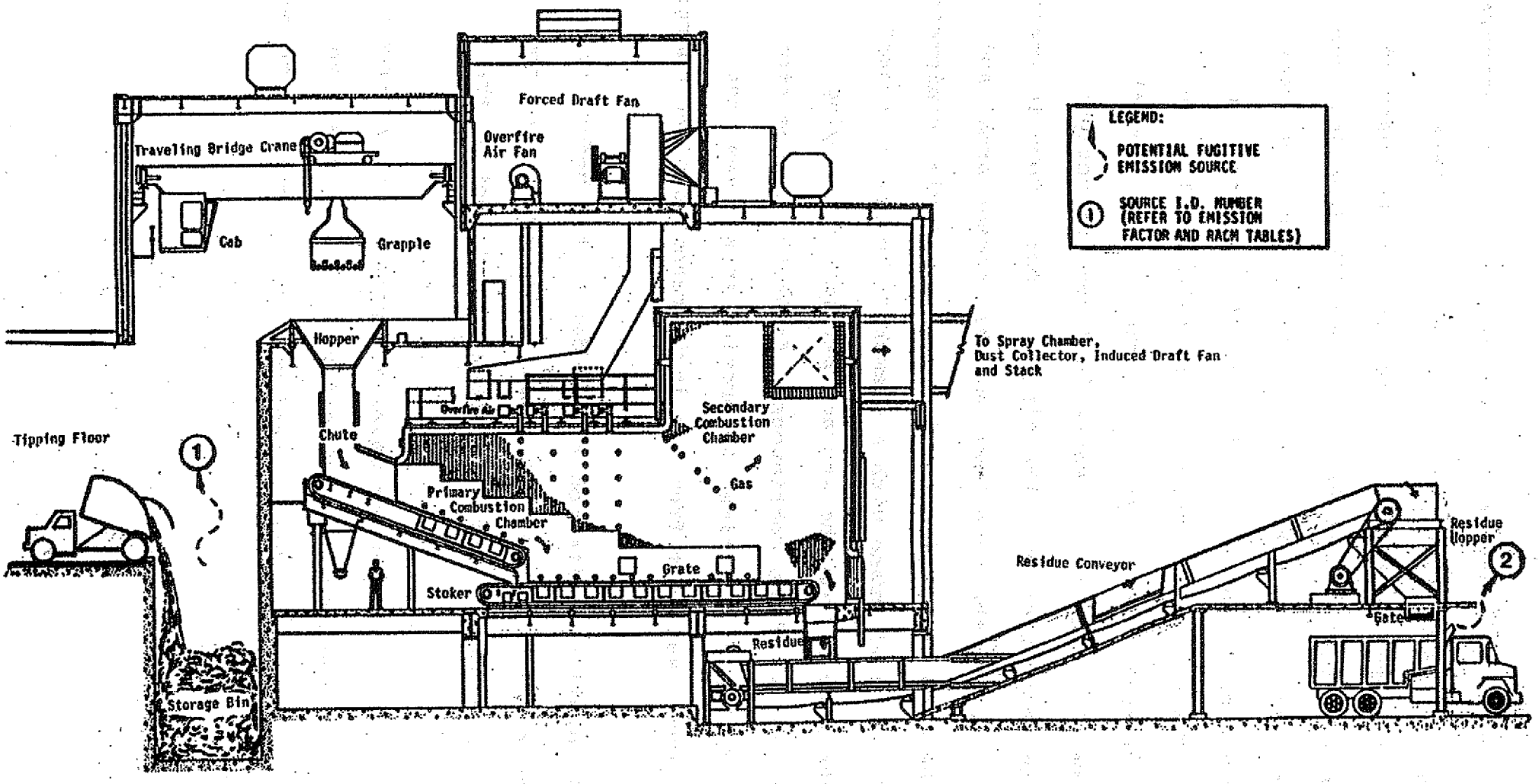

Figure 2.28-1. Simplified process flow diagram of a municipal incinerator and associated fugitive particulate emission sources.

Refuse is delivered by trucks to the storage pit at the incinerator. Before dumping, the trucks usually pass over a scale, so that the total daily weight of refuse entering the facility can be measured and recorded. The size of the storage pit is usually dependent upon such factors as the capacity of the furnace, the emergency storage required in the event of furnace breakdowns and the refuse truck pickup schedules. The refuse trucks enter the tipping floor and normally (at large installations) back up to the pit and dump the refuse. At some small incinerators, waste is dumped directly into the furnace charging hopper or onto the tipping floor. Some incinerators have the charging floor on the same level as the storage area, and transferring can be done with a front-end loader or special equipment.

Typically, an elevated crane with a clamshell bucket or grapple is used to lift the refuse from the storage pit into a charging hopper and gravity chute, which continuously feeds the incinerator. The chute is kept filled at all times to provide an air seal and prevent escape of smoke and heat from the incinerator into the charging area.

The refuse is usually ignited on the feeder stoker before it is dumped onto the burner stoker. Air is supplied for combustion and temperature control through the grate, sidewalls and roof of the combustion chamber.

In all incinerators, combustion gases are passed into a secondary combustion chamber to complete the combustion of the gases and entrained solids. Combustion gases are then cleaned prior to exhausting through the stack.[3]

Residue from the combustion process is discharged from the end of the burning grate into ash hoppers. The hoppers are usually quench tanks which reduce the fire hazards of handling the residue and control dust entrainment from the ash. Lastly, a drag apron pan conveyor continuously removes the wet residue from the bottom of the incinerator.[4]

The remainder of the residue in the incinerator is in the form of siftings and fly ash. The siftings are either manually removed from beneath the grates through clean-out doors or are collected in troughs and mechanically conveyed to the residue hopper. Fly ash captured in gas-cleaning devices may be handled separately or in combination with the other residue.

Most municipal incineration systems are designed to allow dump trucks to load the residue directly from the drag-out conveyor for delivery to a landfill or other disposal site.

Potential sources of fugitive dust from the municipal incineration process are as follows:

1. tipping floor and storage pit area (refuse unloading, crane loading, etc.),
2. ash handling and disposal systems, and
3. road surfaces.

2.28.2 Fugitive Dust Emission Factors

The fugitive dust emission factors for the various sources of fugitive dust from municipal incineration are presented in Table 2.28-1. Except for simply recognizing that fugitive emissions exist at such facilities, the literature surveyed contained only one source of data concerning fugitive dust emission factors. This source provided an emission factor for fly ash handling and disposal which was described as an engineering estimate without details as to the derivation. The reliability of this factor should be considered as very poor.

TABLE 2.28-1. FUGITIVE DUST EMISSION FACTORS FOR MUNICIPAL INCINERATION

Source	Emission factor	Reliability rating	Reference
(1) Refuse dumping, handling	NA	—	—
(2) Ash handling, disposal	20-100 lbs/ ton ash handled	E	5

NA = Not available

Also, no specific emission factors were found in the literature for the dumping of refuse or for an analogous operation.

Emission factors for fugitive dust emissions from roadways are presented in Section 2.1.1 of this study.

2.28.3 Particle Characterization

There are two types of fugitive dust particles that are generated at municipal incineration systems. These are the dust carried by the refuse brought to the incinerator and the fly ash caused by incineration of the refuse. (Particle characteristics for dust from roadways are discussed in Section 2.1.1.) Particle size and density data are limited for fugitive dust generated during refuse dumping and handling.

The composition of refuse varies from municipality to municipality. Table 2.28-2 shows the range in composition of residential solid wastes in 21 U.S. cities.[6] The moisture content of solid waste is a particularly important variable because of its affect on the "heat content" of the waste material. Moisture content may also affect solid waste density and ease of handling.

As shown in Table 2.28-3, the primary combustible elements in refuse are carbon and hydrogen, with much lower amounts of sulfur and nitrogen. Some constituents of the ash may also oxidize during incineration. The net result of effective combustion is the conversion of the carbon in the trash to carbon dioxide (CO_2), and hydrogen to water (H_2O). Sulfur is converted to sulfur oxides (primarily SO_2); some nitrogen is converted to nitrogen oxides; and organic chlorides are converted to hydrogen chloride (HCl).[7]

TABLE 2.28-2.

RANGE IN COMPOSITION OF RESIDENTIAL

SOLID WASTES IN 21 U.S. CITIES[6]

Component	Percent Composition By Weight		
	Low	High	Average
Food waste	0.8	36.0	18.2
Garden waste	0.3	33.3	7.9
Paper products	13.0	62.0	43.8
Metals	6.6	14.5	9.1
Glass and ceramics	3.7	23.2	9.0
Plastics, rubber and leather	1.6	5.8	3.0
Textiles	1.4	7.8	2.7
Wood	0.4	7.5	2.5
Rock, dirt, ash, etc.	0.2	12.5	3.7

TABLE 2.28-3. TYPICAL COMPOSITION OF MUNICIPAL SOLID WASTE [7]

Category	Weight % (as fired)	Component	Weight %
Metal	8.7	Moisture (H_2O)	28.16
Paper	44.2	Carbon (C)	25.62
Plastics	1.2		
Leather and rubber	1.7	Oxygen (O)	21.21
Textiles	2.3	Hydrogen (H)	3.45
Wood	2.5	Sulfur (S)	0.10
Food waste	16.6	Nitrogen (N)	0.64
Yard waste	12.6	Ash	20.82
Glass	8.5		
Miscellaneous	1.7		
	100.0		100.0

In addition, there is the possible presence of toxic materials, for example, heavy metals (mercury and lead), beryllium, pesticides, asbestos and solvents. Typical hazardous wastes are listed in Table 2.28-4.[8] It is impossible to completely prevent the entry of such wastes into the municipal wastes.[9]

Particulate matter that has been identified in incinerator stack emissions consists of smoke, soot, fly ash, grit, dirt, carbonaceous flakes, aldehydes, organic acids, esters, fats, fatty materials, phenols, hydrocarbons and polynuclear hydrocarbons. The size of the particles range from less than 5 microns to 200 microns and larger.[10] Particle density typically ranges from 2 to 3 g/cm^3.[11]

Table 2.28-5 gives the breakdown of particle size and other physical properties of particulate matter gathered in the area between the combustion chambers and the gas-cleaning devices for three test incinerators, each with a different grate system.[12]

Very little data have been published on the chemical composition of the particulate matter. The few results that have been published show that fly ash emissions from municipal incinerators may consist of an average of from 5 to 30 percent organic matter and from 70 to 95 percent inorganic matter. A chemical analysis that gives the various inorganic constituents of incinerator fly ash from the South Shore incinerator in New York City is presented in Table 2.28-6.[13]

A rather detailed elemental analysis of ashed incinerator stack effluent and collector catch was presented by Jens and Rehm.[14] The incinerator tested was equipped with a wet impingement control system. Results of two test runs are summarized in Table 2.28-7.[15]

TABLE 2.28-4. EXAMPLES OF HAZARDOUS WASTES IN MUNICIPAL SOLID WASTE

Paint, solvents, gasoline, kerosene, oils
Highly flammable plastics, dusts, shavings
Explosives and pyrophoric materials
Organic chemicals, including toxic materials such as pesticides, phenols, and chlorinated compounds
Other toxic materials such as mercury, lead, and arsenic compounds, and wastes which contain appreciable amounts of toxic materials (e.g. lead-containing waste crankcase oil and paint)
Acids, caustics, other reactive chemicals
Biologically active materials, e.g., pharmaceutical wastes and some pathological wastes from veterinarians and hospitals
Radioactive wastes
Pressurized containers
Contaminated containers

TABLE 2.28-5. PHYSICAL PROPERTIES OF PARTICLES LEAVING FURNACE [12]

	Installation Number *		
	1	2	3
% of total sample collected in cyclone	77.0	77.5	63.0
% of total sample collected in baghouse	23.0	22.5	37.0
Specific gravity, g/cm^3	2.65	2.70	3.77
Bulk density, lb/ft^3	-	30.87	9.4
Loss on ignition @ 150°C, %	18.5	8.15	30.4
Analysis			
% By weight < 2 microns	13.5	14.6	23.5
% By weight < 4 microns	16.0	19.2	30.0
% By weight < 6 microns	19.0	22.3	33.7
% By weight < 8 microns	21.0	24.8	36.3
% By weight < 10 microns	23.0	26.8	38.1
% By weight < 15 microns	25.0	31.1	42.1
% By weight < 20 microns	27.5	34.6	45.0
% By weight < 30 microns	30.0	40.4	50.0

* Each incinerator had a different grate system. The furnace capacities ranged from 120 to 250 tons per day.

TABLE 2.28-6. CHEMICAL ANALYSIS OF FLYASH SAMPLES FROM SOUTH SHORE INCINERATOR, NEW YORK CITY, BY SOURCE[13]
(percent by weight)

Component	Source of Sample		
	Upper flue	Expansion chamber	Emitted
Organic	0.5	0.6	10.4
Inorganic	99.5	99.4	89.4
Silica as SiO_2	50.1	54.6	36.1
Iron as Fe_2O_3	5.3	6.0	4.2
Alumina as Al_2O_3	22.5	20.4	22.4
Calcium as CaO	7.9	7.8	8.6
Magnesium as MgO	1.8	1.9	2.1
Sulfur as SO_3	4.3	2.3	7.6
Sodium and potassium oxides	8.1	7.0	19.0

TABLE 2.28-7. SPECTROGRAPHIC ANALYSIS OF ASHED INCINERATOR PARTICULATE MATTER[15]

Element	Stack effluent, percent ashed material	Collector catch, percent ashed material
Silicon	5+ -	10+ -
Manganese	0.1 - 1.0	0.1 - 1.0
Chromium	0.1 - 1.0	0.1 - 1.0
Nickel	1.0 - 10+	0.001 - 0.01
Copper	0.1 - 1.0	0.01 - 0.1
Vanadium	0.001 - 0.01	0.01 - 0.1
Iron	0.1 - 5.0	0.5 - 5.0
Tin	0.001 - 0.5	0.05 - 0.5
Aluminum	0.1 - 10	1 - 10
Zinc	1 - 10	1 - 10
Magnesium	1 - 10	1 - 10
Titanium	0.5 - 5.0	0.5 - 5.0
Silver	0.001 - 0.01	0.001 - 0.1
Boron	0.01 - 0.1	0.01 - 0.1
Barium	0.1 - 1.0	0.1 - 1.0
Beryllium	0.001 - 0.01	0.001 - 0.01
Calcium	10+ -	10+ -
Sodium	1 - 10	1 -
Lead	0.01 - 0.5	0.1 - 1.0
Sulfur	-	0.620 -
Phosphorus	1.140 - 1.460	1.760 -
Silicate	5.4 -	-

2.28.4 Control Methods

Dust generated in the tipping floor and storage pit areas of a municipal incineration system during refuse dumping, crane loading, and hopper charging can be troublesome. Enclosing the tipping area is considered desirable for dust control, odor confinement, reduction of wind-blown refuse, noise reduction, and night and weekend storage of vehicles. Many incinerators, in the interest of low first cost, are equipped with only a canopy over the tipping bays, or nothing at all.[16]

Wetting the solid waste in the storage pit by use of water sprays is frequently used as a means of dust control. The problems with this technique are that wet residue often results in incomplete burning and higher emissions, and refuse with high moisture content can corrode downstream equipment.[17] Also, more BTU's are required for complete combustion of the wet residue, which results in higher energy costs for operating the incinerator.

Exhaust hoods over the dumping areas can reduce dust.[18] The dust-laden air flows through ducts to a fabric filter. Some incinerators, to intercept the dust from refuse dumping, design inlet ports along the top of the pit that draw air over the tipping floor and storage bin. Often combustion air for the furnace is taken from this area. The negative air pressure produced in the area by this method does an effective job of preventing the escape of dust-laden air from the building, helps housekeeping, prevents any odor from leaving the plant, and improves safety by helping to remove smoke and heat during a pit fire. Also, carefully designed and engineered truck entrance doors and dumping arrangements can minimize the "upset" which occurs when trucks enter or leave the building.[19]

Enclosed material handling systems to permit positive exhaust of air through purification systems is a preferred design for municipal incinerators. Dust-laden air can be processed in fabric filters or ducted to the furnace.[20]

Fly ash handling and disposal operations present no problems if the ash is wet. Some plants reduce dust problems by intermixing ash with wet residue or by topping off the truck with a layer of wet residue. However, dry fly ash is difficult to handle and can be easily picked up and scattered by the wind. The handling of dry fly ash can be controlled by applying a wetting agent, covering the ash in the trucks during hauling, and minimizing the free fall distance of the ash during loading. At the disposal site, emissions from dumping operations can be controlled by wet suppression and minimizing the free fall distance of the ash. Emissions from wind erosion at the disposal site may be controlled by covering with dirt or stable material, revegetation or chemical stabilization.

Roads are a major source of fugitive emissions at municipal incinerators. Details on the control options and costs are presented in Section 2.1. Table 2.28-8 summarizes the available control technologies, their effectiveness, estimated costs, and RACM selections.

2.28.5 Recommended Reasonably Available Control Measures (RACM)

The recommended control technique for refuse dumping and handling in the tipping floor and storage pit area is utilizing air ports in the dumping area and venting to a fabric filter. This would give the most effective control and is already in use at many facilities.

The selected RACM for control of fly ash handling and disposal consist of using wet suppression, minimizing free fall distances and covering of the haul trucks to and from the disposal site. Furthermore, the covering of the disposed fly ash with dirt is also recommended.

TABLE 2.28-8. A SUMMARY OF THE CONTROL ALTERNATIVES, EFFICIENCIES AND COSTS, AND THE RACM SELECTIONS FOR FUGITIVE DUST EMISSIONS FROM MUNICIPAL INCINERATION

Fugitive dust sources	Control alternatives	Control efficiency %	Control costs, Jan., 1980 $ Capital	Control costs, Jan., 1980 $ Annualized	Cost benefit $/lb	RACM selection
(1) Refuse dumping, handling	Air ports in storage pit with vent to furnace	90[a]	139,000[b]	24,500[b]	NA	Air ports in storage pit with vent to furnace; or hooding, vent to fabric filter[c]
	Hooding, vent to fabric filter	98[a]	d	d	NA	
	Water sprays in storage pit	50[e]	d	d	NA	
(2) Ash handling, disposal	Wet suppression	50 to 100[f]	49,700[g]	22,300[h]	0.01	Wet suppression, cover haul trucks, minimize free fall distances.
	Cover haul trucks	99[a]	50[i]	d	NA	
	Minimize free fall distances	NA	d	d	NA	

NA = not available

[a] Based on engineering judgment.

[b] Based on 500 ton/day municipal refuse incinerator with two (2) continuous feed refractory wall furnaces, 360 days/yr operation. Reference 21.

[c] RACM selection dependent upon existing design characteristics.

[d] Data not available.

[e] From Section 2.1.3, Material Handling.

[f] Reference 5. p. 2-27.

[g] Reference 22. p. 4-8.

[h] Reference 22. p. 4-11.

[i] Based on $0.40/ft^2 of covering material to cover 125 ft^2. Reference 23.

For roadways which are in relatively constant use, a paving/cleaning program can best alleviate fugitive dust; however, in some cases the cost may be prohibitive. A program of oiling can provide good control at a reasonable cost and is recommended for infrequently used roads or in situations where a paving program would be impractical due to high costs. For more detailed information with respect to fugitive dust control for roadways, see Section 2.1.1.

REFERENCES FOR SECTION 2.28

1. Stear, James R., Municipal Incineration: A Review of Literature, AP-79, Research Triangle Park, North Carolina, EPA, June 1971.

2. Axetell, K., Devitt, T.W., Kulujian, N.J., Inspection Manual for the Enforcement of New Source Performance Standards, EPA, January 1975.

3. Op. cit. Reference 1. p. 23.

4. Op. cit. Reference 2. p. 3-4.

5. Technical Guidance for Control of Industrial Process Fugitive Particulate Emissions. PEDCo Environmental, Inc., Cincinnati, Ohio; Prepared for EPA, Research Triangle Park, North Carolina, March 1977. p. 2-44.

6. Municipal-Scale Thermal Processing of Solid Wastes, RECON Systems, Inc., EPA, 1977. p. 17.

7. Ibid. p. 105.

8. Ibid. p. 278.

9. Ibid. p. 479.

10. Op. cit. Reference 1. p. 79.

11. Op. cit. Reference 6. p. 224.

12. Walker, A.B. and F.W. Schmitz. Characteristics of Furnace Emissions from Large, Mechanically-Stoked Municipal Incinerators. In: Proceedings of 1966 National Incinerator Conference. New York, American Society of Mechanical Engineers, 1966. p. 64-73.

13. Op. cit. Reference 1. p. 84.

14. Jens, W. and F.R. Rehm. Municipal Incineration and Air Pollution Control In: Proceedings of 1966 National Incinerator Conference. New York, American Society of Mechanical Engineers, 1966. p. 74-83.

15. Op. cit. Reference 1. p. 84.

16. Op. cit. Reference 6. p. 94.

17. Op. cit. Reference 2. p. 5-2.

18. Op. cit. Reference 1. p. 26.

19. File, J.A., The American City, "European Refuse-Disposal," p. 128, September 1966.

20. Op. cit. Reference 6. p. 200.

21. Letter from Brain Gillen, P.E., Lockwood, Kessler & Bartlett, Inc., to James A. Cummings, Ohio EPA, February 28, 1980.

22. Nonmetallic Minerals Industries Control Equipment Costs, Prepared by Industrial Gas Cleaning Institute, Stanford, Connecticut, U.S. EPA, Strategies and Air Standards Division, Economic Analysis Branch, Research Triangle Park, North Carolina, February 1977.

23. Personal Communication between Columbus Tent and Awning and James A. Cummings, Ohio EPA, January, 1980.

APPENDIX FOR SECTION 2.28

Venting storage pit area to furnace

Capital Costs

1)	Equipment costs (control device + aux's)	$ 60,000
2)	Tax + freight (7% of 1)	$ 4,200
3)	Installation costs (75% of 1)	$ 45,000
4)	Subtotal (1 + 2 + 3)	$ 109,200
5)	Engineering (10% of 4)	$ 10,920
6)	Subtotal (4 + 5)	$ 120,120
7)	Contingencies (10% of 6)	$ 12,012
8)	Total Capital costs (6 + 7)	$ 132,132

$$\$132,132 \times \frac{(249.6)}{(238.0)} = \$139,000$$

Annual Costs

a. PV = R · PV/ n = 30 i = 12%
$139,000 = (8.055) · R
$17,256 = R

b. Maintenance (2%)($139,000) = $2,780

c. Electric (ref. 24) $4,500

d. Total Annual Costs = $17,256 + $2,780 + $4,500 = $24,536

Wet suppression costs

Capital Costs

NMI p. 4-8 Equipment Cost = $18,460 $\frac{(249.6)}{(204.1)}$ = $22,575

1)	Equipment costs (control device + aux's)	$22,575
2)	Tax + freight (7% of 1)	$ 1,580
3)	Installation costs (75% of 1)	$16,931
4)	Subtotal (1 + 2 + 3)	$41,086
5)	Engineering (10% of 4)	$ 4,109
6)	Subtotal (4 + 5)	$45,195
7)	Contingencies (10% of 6)	$ 4,520
8)	Total Capital costs (6 + 7)	$49,715

Annual Costs

a. $PV = R \cdot PV/\ n = 20 \quad i = 12\%$

$\$49,715 = (7.469) \cdot R$

$\$6,656 = R$

NMI p. 4-11

b. Annual costs $\$12,810 \frac{(249.6)}{(204.1)} = \$15,666$

Total annual costs = $15,666 + $6,656 = $22,322

$$C/B = \frac{\$22,322/yr}{(500\ t/d)(360\ d/yr)(20\ lbs/ton)(.50)} = \frac{22,322}{270,000} = \$0.01/lb \text{ TSP removed}$$

2.29 SALT PROCESSING OPERATIONS

2.29.1 Process Description

Approximately 27 million tons of dry salt are produced each year in the United States and Canada. Some 13 million tons of it are used as deicing salt, the largest single usage.[1]

Salt is conveyed from the mine to sizing equipment (crushing and screening), which separate the salt into different grades as needed. (Table 2.29-1 shows the specifications for some of the different grades of salt.)[2] Generally, such salt processing is done inside buildings.

After crushing and screening, the salt is conveyed to silos, to open storage piles or directly to transportation equipment (barge, rail or truck). From the storage piles, the salt is conveyed to barge, rail or truck via a conveyor. Sometimes, trucks may be loaded with salt by front-end loaders. Front-end loaders may also dump the salt from the storage piles into a hopper located above a boat loading conveyor. It takes about 12-13 hours to load a boat at a rate of 1,000 tons per hour.[3]

After the salt is transported to the purchaser's facility, the salt is unloaded from the barge, railcar or truck to storage piles. The salt from a ship is usually unloaded by either a self-unloading conveyor or by a clamshell and conveyor. Rail cars and trucks dump their loads, usually on the ground, and the salt is loaded onto storage piles with front-end loaders.

Front-end loaders are also used for loading trucks that either apply the salt directly to the streets or transport it to other storage areas for distribution at a later time.

GRADE	SIZING DISTRIBUTION								PURITY, % SODIUM CHLORIDE*
	1/2"	3/8"	#4	#8	#12	#16	#30	PAN	
R.O.M.	0-1%	1-5%	20-30%	25-35%	10-15%	8-12%	5-15%	5-17%	
	7/10"	2M	3/8"	5/16"	1/4"	#12	PAN		
COARSE	0-2%	2-10%	5-12%	50-75%	9-15%	2-5%	0-2%		90-93
	3/8"	1/4"	#4	#8	#12	#16	#30	PAN	
"CC" MEDIUM	0%	8-16%	12-18%	38-45%	13-20%	8-15%	1-8%	0-2%	96.5 to 98
	#12	#14	#16	#20	#30	#40	PAN		
NORTHERN FINE	0-2%	0-2%	2-10%	30-50%	22-30%	5-15%	5-25%		97-98
	#12	#14	#16	#20	#30	#40	PAN		
SPECIAL FINE	0-1%	0-1%	2-7%	30-55%	25-30%	7-16%	5-25%		97-98
	#12	#20	#30	#40	#70	#100	PAN		
"F.C."	0-1%	3-11%	10-17%	16-22%	24-46%	10-20%	3-23%		96-97.5

*All other impurities are magnesium, calcium and sulfates.

Table 2.29-1. Specification guidelines for different grades of salt.

Fugitive dust emissions can occur during the addition of salt onto a pile, during wind disturbance of the pile, during the loading of the weigh hopper, during ship, railcar or truck loading and unloading, and during the movement of vehicles in the storage area.

A process flow diagram for salt processing operations is shown in Figure 2.29-1. Each potential fugitive dust source is identified in the Figure.

2.29.2 Fugitive Dust Emission Factors

A survey of the literature revealed that there has been no effort to quantify the emissions from salt processing operations. No specific emission factors for other industrial sources were discovered that could even be considered analogous to such operations.

2.29.3 Particle Characterization

The particle size of fugitive dust from salt storage piles may vary depending on the disturbance of the pile in the loading and unloading operations. Fugitive dust from salt piles is mostly in the range of 2 μm to 5 μm in size.[4] The salt consists of sodium chloride (about 95 percent), moisture, calcium-magnesium salts and insoluble matter (about 5 percent).[5] This is the only particle size information available in the literature for salt processing operations.

The corrosive nature of salt on concrete, construction materials and moving metal parts distinguishes this aggregate from the materials discussed in Sections 2.1.2 and 2.1.3, "Aggregate Storage Piles" and "Material Handling", respectively. With the storing and handling of salt, rusting and corrosion are more frequent and severe.

2.29.4 Control Methods

Alternative control techniques for the fugitive dust emission sources are presented in Table 2.29-2 along with their estimated control effectiveness and costs. Due to the corrosive nature of salt, controls normally used for storage and handling of other materials are not always applicable to salt. This has to be considered when evaluating control methods.

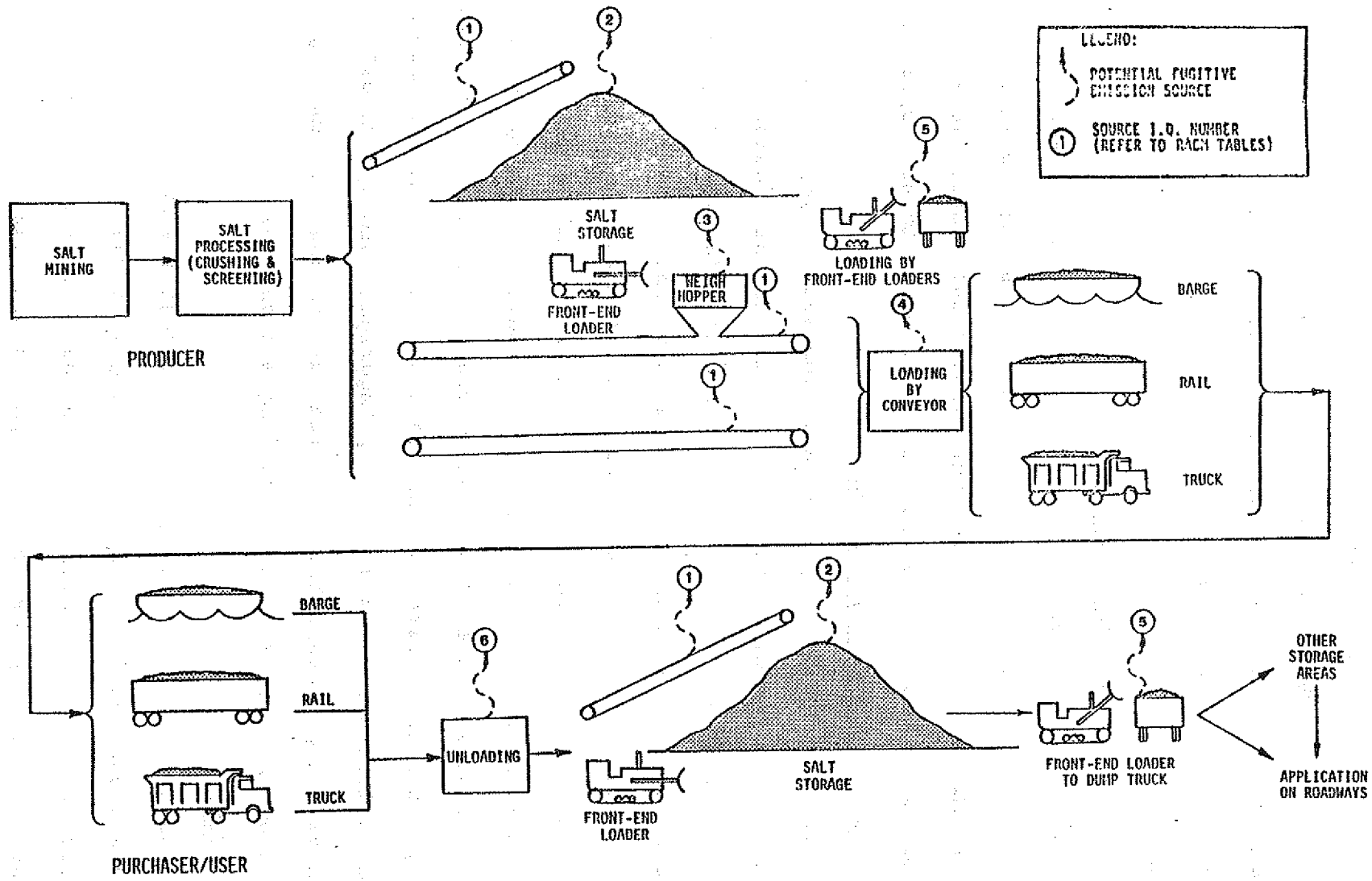

Figure 2.29-1. Simplified process flow diagram for salt processing operations and associated fugitive particulate emission sources.

Effective dust control during conveying operations, whether conducted at the mine or at the purchaser's/user's facility, requires either partial or complete enclosure of the conveyor system.

When salt is loaded onto storage piles, fugitive dust is generated from the fall of the material from the conveyor onto the pile. Keeping the free-fall distance to a minimum, by utilizing height-adjustable stackers and telescopic chutes, can further reduce the fugitive emissions.

Salt is not highly deliquescent. It does not readily dissolve upon exposure to normal atmospheric moisture. Even large unprotected salt stockpiles, directly exposed to rainfall, suffer little loss. Most moisture is retained by the outer layers of the salt pile and later evaporates. The salt forms a protective crust that sheds rainfall. The larger the pile, the less exposed surface area per ton of salt, and the lower the loss ratio even when carried in open storage for prolonged periods. This natural crusting reduces the dust problem that usually occurs with an exposed pile, unless the pile is being frequently worked with a front-end loader.

The Salt Institute highly recommends that all salt be stored in enclosed, permanent facilities.[6] If salt must be stored outside, it is essential that it be placed on an impermeable pad and properly covered to prevent possible detrimental effects on the environment. Run-off should be properly controlled. Temporary covering materials that may be used include tarpaulins and polyethylene, polyurethane or polypropylene covers. These materials are also available with reinforcement for added strength. Canvas covers generally have to be replaced once a year.

Sufficient cover material should be provided at the base of the pile to allow for shrinkage and sealing. To join flexible coverings, they should be lapped and sewn together with a two-inch standing seam, using a Finkbine sewing machine or equivalent. All regular seam sections should be double stitched, and all top seams should be triple stitched using polyester thread. This gives a relatively waterproof and durable seam for most coverings mentioned previously. Taping of sewn seams improves waterproofing.

Old tires lashed together with rope or cable and placed uniformly over the flexible cover provide a suitable tie-down weighting method. To keep the wind from "peeling" covers off salt piles, weights, such as timber (including railroad ties) or concrete anchor blocks, should be placed around the base of the pile.

There are several reasons why salt should be stored in a roofed enclosure, especially small amounts under 500 tons. Smaller tonnages of salt stored in an outdoor stockpile, if not properly covered, will take on moisture that will cause lumps to form in the material and form an excessive frozen crust. Wet and heavy caked salt is harder to handle with loaders and to move through spreaders. It is relatively simple to put small amounts of salt inside for better quality control and easier loading and handling with spreaders. Lastly, inside storage lessens the possibility of contaminating streams and wells with salt run-off and greatly reduces fugitive dust emissions.[7]

The best storage method for deicing salt is the ground level storage shed or building.[8] Storage structure size and costs will vary with individual needs. There are as many types of storage buildings as there are ideas. Many facilities have developed their own particular style. Most buildings, of course, are let for bid, but there are also many that are built with spare or used materials and with captive labor.

Dome-type structures are sometimes used for storing up to 6,000 tons of salt. One advantage of dome storage is that its aerodynamic shape presents no "flat barrier" to rain, hail or wind, thereby keeping physical stress to a minimum. There also is little wasted space, and no supporting posts or beams to get in the way. A dome structure is built to last approximately 50 years.[9]

Salt is often stored in wood, concrete or steel silos or bins which are elevated on legs or placed directly on the ground. Bin or silo storage often costs more initially than a building or shed. The storage capacity of a bin or silo is less than in ground-level storage, and only dry salt can be stored. One advantage to this storage method is that it allows rapid, one-man loading of spreaders when salt is needed during winter storms.

Front-end loaders are generally used for loading out the salt from storage piles. Precautionary measures such as loading out from the downwind side of the storage pile, keeping drop distances to a minimum and speed reduction will help reduce the fugitive dust emissions from this operation.

To control dusting which occurs when front-end loaders are loading the weigh hoppers for conveyors, wind guards may be used. Wind guards can also be used to control the fugitive dust emissions from loading trucks with front-end loaders.

Truck and railcar loading of salt by conveyor can generate fugitive dust emissions. These fugitive emissions can be controlled by enclosing the loading stations and/or by utilizing adjustable chutes.

During the loading of a barge or ship by conveyor, the salt usually falls a considerable distance into a hold. This results in the liberation of a cloud of dust. A telescopic loading spout kept extended as close to the salt surface as possible will reduce the free-fall distance and the dust emissions.

Effective dust control during truck and railcar unloading generally requires the use of a suitable enclosure or shed over the receiving area. Wind guards sometimes are used where front-end loaders move the salt that has been unloaded.

Vessel unloading is primarily done by a retractable bucket type elevator (marine leg). This is lowered into the hold of the vessel. Some generation of fugitive dust occurs in the hold as the salt is scooped out and also at the top of the marine leg where the salt is discharged onto a conveyor. To control these emissions the marine leg should be completely enclosed. Also, by curtailing or minimizing the unloading of a vessel during days with high winds, fugitive emissions can be further reduced.

At both the salt producer's facility and the purchaser's/user's facility, trucks should be covered after loading and prior to departure.

2.29.5 Recommended Reasonably Available Control Measures (RACM)

The recommended RACM for control of fugitive emission sources from salt processing operations are designated in Table 2.29-2. These techniques have been used in the industry and are very effective in reducing fugitive dust emissions.

It is recommended that the fugitive dust emissions occurring from the conveyors be controlled by total enclosure of the conveyor.

The fugitive dust emissions generated during the loading of salt onto piles by conveyors can be controlled by keeping the free fall distance of the material to a minimum through the use of telescopic chutes.

TABLE 2.29-2. A SUMMARY OF THE CONTROL ALTERNATIVES, EFFICIENCIES AND COSTS, AND THE RACM SELECTIONS FOR FUGITIVE DUST EMISSIONS FROM SALT PROCESSING OPERATIONS

Fugitive dust sources	Control alternatives	Control efficiency, %	Control costs, Jan. 1980 $		Cost benefit, $/lb	RACM selection
			Capital	Annualized		
(1) Conveying	Partial (top) enclosure	70[a]	4,300[b]	c	d	Total enclosure
	Total enclosure	90[e]	8,600[f]	c	d	
(2) Salt storage piles						
Loading onto piles	Telescopic chutes	75[e]	8,500[e]	c	d	Telescopic chutes
	Adjustable stacker	25[e]	c	c	d	
Wind erosion	Covering pile	95[e]	16,000[g]	c	d	Covering piles (for large piles > 500 tons)
	Enclosure	90[e]	h	c	d	Enclosure (for smaller piles ≤ 500 tons)
Loading out	Precautions	50[e]	c	c	d	Precautions
(3) Weigh hopper loading (front-end loader)	Wind guards	50[e]	c	c	d	Wind guards
(4) Loading by conveyor						
Truck, railcar	Adjustable chutes	75[e]	c	c	d	Adjustable chutes and enclosure
	Enclosure	70[e]	c	c	d	
Vessel	Telescopic loading spout	75[e]	c	c	d	Telescopic loading spout
(5) Loading trucks by front-end loaders	Wind guards	50[e]	c	c	d	Wind guards and precautions
	Precautions	50[e]	c	c	d	

(continued)

TABLE 2.29-2 (continued)

Fugitive dust sources	Control alternatives	Control efficiency %	Control costs, Jan. 1980 $		Cost benefit, $/lb	RACM selection
			Capital	Annualized		
6 Unloading						
Truck, railcar	Wind guards	50[e]	c	c	d	Enclosure
	Enclosure	70[e]	c	c	d	
Vessel	Enclosure of marine leg	75[e]	c	c	d	Enclosure of marine leg and precautions
	Precautions	50[e]	c	c	d	

[a] "Weather-tight" system; no active dust collection system. Reference 10.

[b] Reference 10, p. 6-3. Based on $43/ft and assuming 100 ft conveyor.

[c] Costs not available.

[d] Cost benefit not calculated due to lack of emission factor.

[e] Reference 10.

[f] Reference 10, p. 6-3. Based on $86/ft and assuming 100 ft conveyor.

[g] Based on $0.32/ton of salt and assuming 50,000 tons of salt. Reference 11.

[h] Cost dependent upon size and type of enclosure.

For storage pile fugitive emissions caused by wind disturbance of the pile, the recommended control technique is covering the pile or complete enclosure.

To control fugitive dust emissions from loading the weigh hopper by front-end loaders, wind guards may be employed.

Emissions resulting from loading trucks and railcars by conveyor should be controlled by utilizing adjustable chutes and enclosures. A telescopic loading spout is recommended for controlling fugitive dust emissions during the loading of vessels by conveyor. The recommended control technique for loading trucks with front-end loaders consists of providing wind guards along with operating precautions.

Unloading trucks and railcars causes fugitive dust emissions which can be controlled by enclosing the unloading station. Enclosure of the marine leg and receiving hopper, and operating precautions should be used to control the dust from vessel unloading.

REFERENCES FOR SECTION 2.29

1. Unpublished draft copy of Salt Storage Handbook, The Salt Institute, Alexandria, Virginia. Forward Spring 1980.

2. Specification guidelines for different grades of salt provided by Morton Salt, Painesville, Ohio. May, 1980.

3. Personal Communication between Jack L. Davis, Facility Manager, Morton Salt, Painesville, Ohio, and James A. Cummings, Ohio EPA. May, 1980.

4. Ohio EPA, Air Lab, Air Particulate Analysis by Charles L. Vorce on Jan. 7, 1980.

5. City of Toledo, Specifications for ASTM Designation D 632-72, Type I Salt, Dec. 1979.

6. The Snowfighter's Salt Storage Handbook, A Practical Guide in Handling De-icing Salt, The Salt Institute, Alexandria, Virginia, Jan. 1980. p. 3.

7. Ibid.

8. Ibid. p. 16.

9. Personal Communication between Edward Hammer, PE, City of Toledo, and James A. Cummings, Ohio EPA. Dec., 1979.

10. Bohn R., T. Cuscino, Jr., and C. Cowherd, Jr. Fugitive Emissions from Integrated Iron and Steel Plants. Midwest Research Institute, Kansas City, Mo. Prepared for U.S. EPA, Research Triangle Park, North Carolina. EPA 600/2-78-050. March 1978.

11. Op. cit. Reference 9.

2.30 GALVANIZING PLANTS

2.30.1 Process Description

Zinc galvanizing involves the art of coating clean, oxide-free iron or steel materials with a thin layer of zinc. The article to be coated is properly cleaned, completely immersed in a molten zinc bath (at 840°F to 860°F), and withdrawn with enough of the molten zinc adhering as a surface film to give the desired coating properties.[1]

Galvanizing operations can be conducted on a batch basis, as in the coating of nuts and bolts, guardrails, etc., or on a continuous basis, as in the coating of wire or chain link fencing. These operations may be found in job shops or as captive operations in large plants.[2]

Typically, the basic steps which are followed in cleaning and galvanizing an iron or steel article consist of the following:[3]

(1) degreasing in a hot, alkaline solution;

(2) rinsing thoroughly in a water rinse;

(3) pickling in a hot, acid bath;

(4) rinsing thoroughly in a water rinse;

(5) prefluxing in a zinc ammonium chloride solution;

(6) immersing the article in molten zinc through a flux cover (usually zinc ammonium chloride); and

(7) finishing (dusting with ammonium chloride to produce a smooth finish).

The process flow diagram shown in Figure 2.30-1 depicts a typical batch or continuous operation.

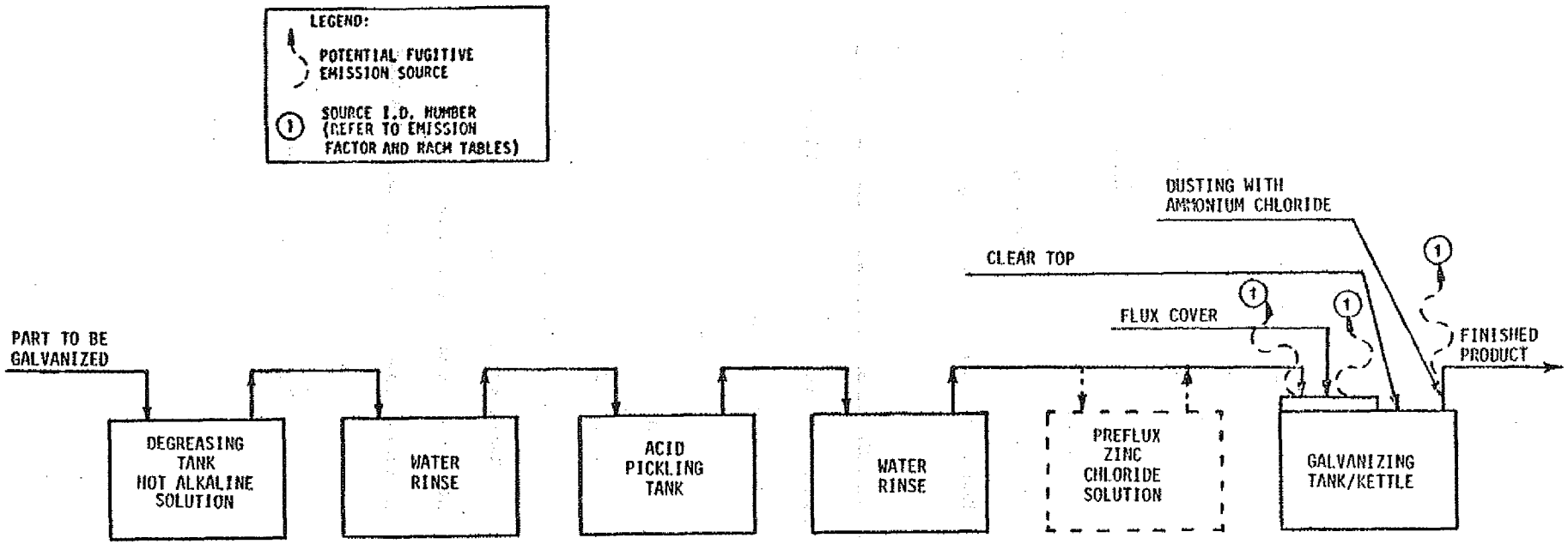

Figure 2.30-1. Simplified process flow diagram for galvanizing plants and associated fugitive particulate emission sources.

When considering the air pollution aspects of a galvanizing operation, one might be inclined to omit the first five steps because they do not normally produce excessive air contaminant emissions. Improper degreasing does, however, increase the generation of air contaminants when the article is immersed in the hot zinc. Moreover, the stripping of zinc coatings in the pickling tanks can cause excessive acid mists to be generated.[5]

The main fugitive emission problem in the galvanizing process is caused by steps (6) and (7) mentioned above. It has been observed that grayish-white particulate fumes are emitted whenever the kettle flux cover is disturbed, when fresh flux is added and when galvanized articles are dusted with ammonium chloride.[6]

The two kettle fluxes in common use are ammonium chloride and zinc ammonium chloride plus a foaming agent such as glycerine, wood flour or sawdust. The foaming agent is used to provide a deeper flux layer and to extend the life of the flux.[7]

A flux cover is used to remove any oxide film that forms as an article is being transported from the last rinse tank to the galvanizing kettle and to exclude air from the part as it enters the zinc bath. It serves as a preheating and drying medium to reduce spattering or explosions in the molten zinc and distortions of thin metal sections. Heat loses from the kettle are also reduced due to the flux cover.[8]

Also, some plants may use "dry" galvanizing as opposed to the normal "wet" galvanizing technique which uses a kettle flux. With "dry" galvanizing no kettle flux is used. Only a preflux is used just before the galvanizing kettle. The emissions from this technique are considerably less than with "wet" galvanizing.

Flux agitation occurs to some extent each time an object is immersed in the molten zinc through the flux cover. If the objects are smooth and dry, the agitation is not great, and the amount of fuming is low. When the agitation of the flux cover is severe, a correspondingly larger amount of fumes is discharged. Also, mechanical actions that break some of the bubbles making up the flux cover release fume-forming gases.[9]

When fresh flux is placed on a kettle, it takes some time to form a foaming cover. Dense fumes escape during the agitation and during the time necessary for the fresh flux to be absorbed by and to become part of the foam.

To obtain brighter, smoother finishes, especially on small items, they are dusted with finely ground ammonium chloride (NH_4Cl) immediately after being removed from the molten zinc bath. The articles dusted are still at a temperature well above the decomposition temperature of ammonium chloride; thus, much of the NH_4Cl is converted to fumes by the operation. Although only small amounts of dusting fluxes are used, dense fumes are normally created.[10]

2.30.2 Fugitive Dust Emission Factors

The estimated fugitive dust emission factor for galvanizing plants is shown in Table 2.30-1. There is no specific emission factor for continuous, batch or dusting operations. The emission factor is an average of emissions from these operations, and is based upon a report by the Los Angeles County Air Pollution Control District, written in 1966.[12] Contact with the Los Angeles County APCD revealed that this report, probably unbound, is no longer available. Also, the reported data were most probably the results of source tests conducted on galvanizing plants in the Los Angeles area before 1960.[13] The reliability of this factor should be considered as fair.

2.30.3 Particle Characterization

The appearance and composition of the fumes discharged from galvanizing operations vary according to the operation being conducted. For example, the galvanizing of nuts, bolts and other small articles does not create much agitation of the flux cover, and emissions are slight. Some fumes are, however, generated when the articles are dusted with ammonium chloride upon removal from the zinc bath. An analysis of these fumes revealed that essentially only ammonium chloride was present.[14] However, fumes from galvanizing operations may also contain substantial amounts of compounds other than ammonium chloride, such as zinc chloride and zinc oxide.

When many different articles are galvanized, some disturb the flux and produce more fumes than others. For example, the galvanizing of chain link fence material continuously agitates the flux cover and results in a continuous discharge of fumes from the kettle.

TABLE 2.30-1. FUGITIVE DUST EMISSION FACTORS FOR GALVANIZING PLANTS

Source	Emission factor	Reliability rating	Reference
1 Galvanizing kettle	5 lbs/ton zinc used	D	11

The average particle size of galvanizing emissions is approximately 2 microns.[15] The actual particle size distribution varies slightly from galvanizing process to galvanizing process; however, a typical particle-size analysis of emissions from a baghouse serving a job-shop, zinc-galvanizing kettle is given below.[16]

Particle diameter, μm	Cumulative weight, %
1.7	0.0
2.1	2.6
2.8	11.5
3.5	21.0
5.6	41.5
8.3	62.5
10.4	70.0
11.8	74.0
13.9	80.5
25.0	88.5
41.7	92.0
83.4	99.0
104.0	100.0

Under some circumstances the fumes may have different characteristics, but these are attributed to the influence of additional contaminants. For example, Table 2.30-2 shows a comparison of the catch from an electrostatic precipitator serving a chain link fencing process kettle with the catch from a baghouse serving a job shop kettle.[17] The material collected by the baghouse was dry and powdery, but it did agglomerate and was difficult to shake from the bags with ordinary bag-shaking procedures. The material taken from the precipitator was sticky and had the general appearance of thick grease. Table 2.30-2 shows that the fumes are different chemically, which

TABLE 2.30-2. CHEMICAL ANALYSES OF THE FUMES COLLECTED BY A BAGHOUSE AND BY AN ELECTROSTATIC PRECIPITATOR FROM ZINC GALVANIZING KETTLES

Component	Fumes collected in a baghouse (job shop kettle), wt %	Fumes collected in a precipitator (chain link galvanizing), wt %
NH_4Cl	68.0	23.5
ZnO	15.0	6.5
$ZnCl_2$	3.6	15.2
Zn	4.9	-
NH_3	1.0	3.0
Oil	1.4	41.4
H_2O	2.5	1.2
C	2.8	-
Not identified	-	9.2

explains their different appearance after being collected. The oil in the fumes collected by the precipitator undoubtedly came from a film of oil on the chain link fence material that was vaporized as the fence material was charged into the hot zinc. Since ammonium chloride vaporizes at 662°F and the zinc bath temperature is usually between 840° and 860°F, it is not surprising that NH_4Cl makes up the bulk of the particulate emissions. However, zinc and zinc chloride have very low vapor pressures at normal galvanizing temperatures, and one would expect neither of them to vaporize to any great extent. It is believed that the discharge of these materials is the result of mechanical entrainment and occurs when wet objects are galvanized or when objects are immersed rapidly through the flux layer.[18]

Lynam[19] discusses the health problem of the particulate galvanizing emissions. The main health problems are associated with zinc chloride ($ZnCl_2$) and zinc oxide (ZnO), which can cause metal fume fever when high concentrations are inhaled. The Occupational Safety and Health Association (OSHA) threshold limit values are:

$ZnCl_2$ - 1 mg/m^3, and
ZnO - 5 mg/m^3.

A literature search did not reveal any measurements of the airborne concentrations of these compounds in the vicinity of a galvanizing kettle.[20]

2.30.4 Control Methods

In order to properly control the extremely fine particulate emissions from a galvanizing kettle serving a continuous galvanizing operation or batch operation using a flux cover, the fumes generated must be conducted to an efficient control device. Fume arresting equipment commonly used to capture the effluent from this process include the following: scrubbers, which produce the least satisfactory results; precipitators, where oil mists are a significant part of

the air contaminants to be captured; and baghouses, where there is little or no oil mist entering the exhaust system. While a baghouse requires less maintenance than precipitators for this application, the temperature inside the baghouse must be kept above the dew point (150°F) even when not in use, to prevent condensation on the bags.[21] Some plants use bags that are injected with lime, which is a mixture of 60% $Ca(OH)_2$ and 40% $Mg(OH)_2$, in order to improve the removal efficiency for ammonium chloride.

As the configuration of the galvanizing kettle varies, it is necessary to vary the air pollution control system to capture the extremely fine particulate emissions caused by this process.[22]

In job shops, the headroom needed makes necessary the use of either high-canopy or room-type hoods. This hooding design allows for overhead materials handling equipment to be used and gives the operators unimpaired access to the kettle. The amount of ventilation volume required with high-canopy hoods increases considerably with the height of the hood; therefore, the size of the collector must be large enough to accommodate the large air volumes required. A slot hood (high inlet velocity) should be used only when the area of fume generation is small, such as with a flux box of a chain link fence-galvanizing kettle in a continuous operation. The slot velocities needed to overcome the thermal draft for the entire surface of a large kettle are high and require large air volumes which cool the surface of the zinc bath. This cooling effect creates problems in applying a good zinc coating and increases fuel consumption. When a slot hood can be used, the amount of ventilation required is smaller than that required with high-canopy hoods; thus, control devices are correspondingly smaller.[23]

Low-canopy hoods can be used on a kettle when headroom is not required. These hoods permit lower ventilation rates for adequate fume capture; therefore, smaller control devices can be used.[24]

Emissions from plants using the "dry" galvanizing technique are normally negligble, and won't require a control device except in cases where severe visible emissions occur.

A reduction in the amount of ammonium chloride used for finishing galvanized articles will significantly reduce visible emissions from galvanizing kettles.[25]

Table 2.30-3 summarizes the available control techniques, their effectiveness, estimated costs, and RACM selections.

2.30.5 Recommended Reasonably Available Control Measures (RACM)

The RACM selections for galvanizing plant fugitive dust emission sources are presented in Table 2.30-3. As indicated, the recommended control for continuous galvanizing operations and batch operations using a flux cover is to hood and vent the galvanizing kettles to a fabric filter. This system gives good control efficiency and reduces visible emissions to almost zero percent opacity.

In the case of batch fed operations using the "dry" galvanizing technique (no flux cover), control devices should be required for the galvanizing kettles only if severe visible emissions (into the ambient air) are evident.

TABLE 2.30-3. A SUMMARY OF THE CONTROL ALTERNATIVES, EFFICIENCIES AND COSTS, AND THE RACM SELECTIONS FOR FUGITIVE DUST EMISSIONS FROM SOURCES AT GALVANIZING PLANTS

Fugitive dust sources	Control alternatives	Control efficiency, %	Control costs, Jan. 1980 $		Cost benefit, $/lb	RACM selection
			Capital	Annualized		
(1) Galvanizing kettle:						
Batch fed operations						
(no flux cover)	No control (emissions negligible)	-	-	-	-	No control[a]
(with a flux cover)	Canopy hood, vent to fabric filter	90-99[b]	205,400[c]	34,500[d]	1.28	Canopy hood, vent to fabric filter
	Canopy hood, vent to scrubber	NA	NA	NA	NA	
Continuous fed operations	Slot hood, vent to fabric filter	90-99[b]	95,500[e]	16,600[f]	0.42	Slot hood, vent to fabric filter
	Slot hood, vent to precipitator	80-95[g]	215,200[h]	34,100[f]	0.97	
	Slot hood, vent to scrubber	90[i]	375,000[j]	105,700[f]	2.67	

NA = Not available

[a] Except when severe visible emissions are evident.

[b] No visible emissions after control per Reference 3.

[c] Based on 4'w x 25'l x 3'h kettle configuration.

[d] Reference 26. Based on 6,000 hr/yr operation, galvanizing 75,000 tons/yr of steel guardrail.

[e] Reference 1 and 26. Calculated for 4000 ft^2 of cloth and an exhaust rate of 10,000 acfm.

[f] Reference 26. Based on 6,000 hr/yr operation, galvanizing 110,000 tons/yr of steel coils.

[g] Reference 3. p. 20.

[h] Reference 26 and 27.

[i] Reference 26 and 27.

[j] Quoted cost for high efficiency, variable throat venturi scrubber system. Reference 27.

[k] Control required only if there are visible emissions from the kettle discharge point into the ambient air.

REFERENCES FOR SECTION 2.30

1. Air Pollution Engineering Manual, Second Edition. Danielson, J.A. (ed.). U.S. EPA. Research Triangle Park, North Carolina. May 1973. p. 402.

2. Field Operations and Enforcement Manual for Air Pollution Control, Volume III: Inspection Procedures for Specific Industries. Prepared by Pacific Environmental Services, Inc., Santa Monica, California. August, 1972. p. 7.16.1.

3. Emissions From Hot-Dip Galvanizing Process. Final Report. Prepared by Pacific Environmental Services, Inc., Santa Monica, California. March, 1976. p. 2.

4. Op. cit. Reference 3. p. 14.

5. Op. cit. Reference 1. p. 402.

6. Op. cit. Reference 1. p. 403.

7. Op. cit. Reference 2. p. 403.

8. Op. cit. Reference 1. p. 402.

9. Ibid. p. 404.

10. Op. cit. Reference 3. p. 4.

11. Compilation of Air Pollutant Emission Factors. Second Edition. U.S. EPA, Office of Air and Water Mangement, Office of Air Quality Planning and Standards. Publication No. AP-42. Research Triangle Park, North Carolina. August 1977.

12. Hammond, W.F., "Data on Non-Ferrous Metallurgical Operations", Los Angeles County Air Pollution Control District, 434 South San Pedro Street, Los Angeles, California (November 1966).

13. Op. cit. Reference 3. p. 23.

14. Op. cit. Reference 1. p. 404.

15. Ibid. p. 404.

16. Ibid. p. 407.

17. Ibid. p. 404.

18. Lemke, E.E., W.F. Hammond, and G. Thomas, "Air Pollution Control Measures for Hot-Dip Galvanizing Kettles", J. Air Pollution Control Assoc., 10, 70-77(1960).

19. Lynam, D.R., "OSHA Health Requirements for the Galvanizing Industry", Presented at the 38th Annual Meeting of the American Hot-Dip Galvanizing Association, Houston, Texas (March 13-17, 1973).

20. Op. cit. Reference 3. p. 10.

21. Op. cit. Reference 2. p. 7.16.6.

22. Op. cit. Reference 2. p. 7.16.3.

23. Op. cit. Reference 1. p. 405.

24. Ibid. p. 406.

25. Op. cit. Reference 3. p. 6.

26. GARD, Inc. Capital and Operating Cost of Selected Air Pollution Control Systems, EPA-450/3-76-014, May 1976.

27. Ducon Company, Inc., Subsidary of United States Filter Corp., 147 East Second Street, Mineola, New York, 11501, Mr. Paul T. Hubbard, Manager Technical Services.

APPENDIX FOR SECTION 2.30

BATCH FED OPERATIONS

Canopy Hood, Vent to Fabric Filter

Assume:	Kettle	4'w 25'l 3'h
	Hood	10'w 40'l
	Indraft velocity	100 fpm
	Exhaust rate	30,000 cfm
	Duct diameter	52.5"
	Filter area	15,000 ft^2
	Filter velocity	2 fpm

Capital Costs

Ref. 26.	p. 4-12.	Baghouse	$50,000	
Ref. 26.	p. 4-15.	Bags	7,500	[($.40)(15,000)(2)]
Ref. 26.	p. 4-28.	Labor	1,250	[$49 + $5.2 l + $0.62 l^2]
NMI p. 3-4.		Ductwork	5,330	
NMI p. 3-4.		Fan w/motor	7,700	
		Equipment costs =	$71,780	

1)	Equipment costs (control devices + aux.'s) . . .	$71,780
2)	Tax & freight (7% of 1)	5,025
3)	Installation costs (75% of 1)	53,835
4)	Subtotal (1 + 2 + 3)	130,640
5)	Engineering (10% of 4)	13,064
6)	Subtotal (4 + 5)	143,704
7)	Contingencies (10% of 6)	14,370
8)	Total capital costs	$158,074

$$\$158,074 \frac{(249.6)}{(192.1)} = \$205,390 \text{ or } \approx \underline{\$205,400}$$

Annual Costs

Maintenance . . . $205,400 x 2% = $4,108

Operating cost . . . ($.75/hr)(6,000 hr/yr)$\frac{(249.6)}{(192.1)}$ = $5,847

Capital charges:

$$PV = r \cdot PV / n = 30 \quad i = 12\%$$
$$r \cdot (8.055) = \$205,400$$
$$r = \$25,500$$

Total annual costs . . . $4,108 + $5,847 + $25,500 = $35,455 or ≈ $34,500

Cost Benefit (C/B)

$$C/B = \frac{\$34,500}{(75,000 \text{ ton/yr})(0.08^*)(5 \text{ lb/ton})(.90)} = \$1.28/\text{lb TSP removed per year}$$

* Reference 3. p. 24. (8% of process weight rate is approximately equal to amount of zinc used)

CONTINUOUS FED OPERATIONS
Slot Hood, Vent to Fabric Filter

Exhaust rate = 10,000 acfm
Filter area = 3,000 ft^2
Filter velocity = 2.5 fpm

Capital Costs

Ref. 26. p. 4-12.	Baghouse	=	$20,000
Ref. 26. p. 4-15.	Bags	=	3,200
NMI p. 3-4.	Fan w/motor	=	3,500
NMI p. 3-4.	Ductwork	=	7,000
	Total equipment costs	=	$33,700

1)	Equipment costs (control device + aux.'s) . .	$33,700
2)	Tax & freight (7% of 1)	2,359
3)	Installation costs (75% of 1)	25,275
4)	Subtotal (1 + 2 + 3)	61,334
5)	Engineering (10% of 4)	6,133
6)	Subtotal (4 + 5)	67,467
7)	Contingencies (10% of 6)	6,747
8)	Total capital costs (6 + 7)	$74,214

$$\$74,214 \frac{(249.6)}{(192.1)} \approx \underline{\$96,500}$$

Annualized Costs

Ref. 26. p. 4-89. Maintenance . . . $76,500 · (2%) = $1,930

Ref. 26. p. 4-88. Operating costs . .$.35 (6,000 hr/yr) = $2,100 $\frac{(249.6)}{(192.1)}$ = 2,729

Capital charges:

$$PV = r \cdot PV / n = 30 \quad i = 12\%$$
$$r\ (8.055) = \$96,500$$
$$r \approx \$11,980$$

Total annualized costs = $1,930 + $2,729 + $11,980 ≈ $16,600

Cost Benefit (C/B)

$$C/B = \frac{\$16,600}{(110,000\ \text{ton/yr})(0.08^*)(5\ \text{lb/ton})(.90)} = \$0.42/\text{lb TSP removed per year}$$

* Reference 3. p. 24. (8% of process weight rate is approximately equal to amount of zinc used)

CONTINUOUS FED OPERATIONS
Slot Hood, Vent to Electrostatic Precipitator

Exhaust rate = 1700 cfm
Slot velocity = 2,000 fpm
Slot area = 122.4 in.^{2}
Length = 120 in.
Width = 1.02 in.

Drift velocity = 1.66 fps
Duct = 12 1/2"
X-sect. Area = 17 ft^2
(100 fpm)

Ref. 26. p. 4-1. $A = 1700\ \text{cfm} \cdot \ln(1-.99)/(1.66\ \text{f/s} \cdot 60\ \text{s/m}) = 78.6\ \text{ft}^2$

Ref. 26. p. 4-2. $P = \$75,000 + 2.56\ A = \$75.201 \frac{(249.6)}{(192.1)} = \$97,711$

Capital Costs

1)	Equipment costs (control device + aux.'s) . .	$97,711
2)	Tax and freight (7% of 1)	6,840
3)	Installation costs (75% of 1)	73,283
4)	Subtotal (1 + 2 + 3)	177,834
5)	Engineering (10% of 4)	17,783
6)	Subtotal (4 + 5)	195,617
7)	Contingencies (10% of 6)	19,562
8)	Total capital costs (6 + 7)	$215,179 or ≈ $215,200

Annualized Costs

Ref. 26. p. 4-89. Maintenance . .(2%)($215,200) = $4,304

Ref. 26. p. 4-86. Operating costs. . ($.40/hr)(6,000 hr/yr) = $2,400 $\frac{(249.6)}{(192.1)}$ = $3,118

Capital charges:

$$PV = r \cdot PV / n = 30 \quad i = 12\%$$
$$r\ (8.055) = \$215,200$$
$$r = \$26,716$$

Total annualized costs = $4,304 + $3,118 + $26,716 ≈ $34,100

Cost Benefit (C/B)

$$C/B = \frac{\$34,100}{(110,000\ \text{ton/yr})(0.08^*)(5\ \text{lb/ton})(.80)} = \$0.97/\text{lb TSP removed per year}$$

* Reference 3. p. 24. (8% of process weight rate is approximately equal to amount of zinc used)

CONTINUOUS FED OPERATION
Slot Hood, Vent to Scrubber

Ref. 27. 45" Pressure drop
2 Fans . . . 13,000 cfm, 150hp & 9,000 cfm, 100hp

Capital Costs

Ref. 27.	1)	Equipment cost (Jan.'80)	$125,000
Ref. 26. p. 4-89.	2)	Installation costs (140% of 1)	175,000
	3)	Tax and freight (7% of 1)	8,750
	4)	Subtotal (1 + 2 + 3)	308,750
	5)	Engineering (10% of 4)	30,875
	6)	Subtotal (4 + 5)	339,625
	7)	Contingencies (10% of 6)	33,963
	8)	Total capital costs	$373,583 or ≈ $375,000

Annualized Costs

Ref. 26. p. 4-89. Maintenance . . $375,000 (13%) = $48,750

Ref. 26. p. 4-87. Operating costs . . $2,500 + $5,500 = $8,000

$$\frac{(249.6)}{(192.1)} = \$10,395$$

Capital charges:

$$PV = r \cdot PV \;/\; n = 30 \quad i = 12\%$$
$$r \cdot (8.055) = \$375,000$$
$$r = \$46,555$$

Total annualized costs = $48,750 + $10,395 + $46,555 = $105,700

Cost Benefit (C/B)

$$C/B = \frac{\$105,700}{(110,000 \text{ ton/yr})(0.08^*)(5 \text{ lb/ton})(.90)} = \$2.67/\text{lb TSP removed per year}$$

* Reference 3. p. 24. (8% of process weight rate is approximately equal to amount of zinc used)

APPENDIX A

COST ESTIMATION GUIDELINES FOR RACM FOR FUGITIVE DUST

In estimating costs for the various industries and general sources addressed in the study, only general costs of typical control devices as applied on a typical plant configuration were obtained. This description is abstract and nonspecific but reflects the nature of the costs. It was not the purpose of this project to develop detailed costs for <u>any</u> site-specific application of a particular control measure. Caution must be exercised in the use of the cost data to assure that costs are not erroneously applied to a specific plant. Cost estimates are of order-of-magnitude accuracy, and a site visit with a detailed evaluation of specific equipment layouts is necessary to obtain meaningful costs for a specific plant.

For the actual industry cost estimates, both capital and annualized costs were estimated. Sources utilized included the GARD manual, the IGCI "Nonmetallic Minerals Industries Control Equipment Costs" and other industry specific references that contained applicable cost data. Each reference contained costs based on different years, different methods of calculating indirect costs, differences in inclusion or exclusion of auxiliary equipment, different methods of calculating fixed capital charges, different interest rates, etc. It would have been impossible to

put all the cost estimates on exactly the same basis, but it was attempted to adjust the estimates to be compatible on the basis of year of dollars, size of application, indirect costs (where possible) and annual fixed capital charges (where possible).

The costs were all adjusted to reflect January, 1980 dollars using the Chemical Engineering Cost Index. Applicable index values, including those published after the initial preparation of this document, are as follows:

Annual Index	Monthly Index		
1970 = 125.7	January 1979	=	225.9
1971 = 132.2	July 1979	=	239.3
1972 = 137.2	January 1980	=	249.6*
1973 = 144.1	January 1980	=	248.5
1974 = 165.1	July 1980	=	263.6
1975 = 182.4	January 1981	=	276.6
1976 = 192.1	July 1981	=	303.1
1977 = 204.1	January 1982	=	308.7
1978 = 218.8	January 1982	=	311.8**
1979 = 238.7	July 1982	=	314.2
1980 = 261.2	January 1983	=	315.5
1981 = 297.0			
1982 = 314.0			

*Represents an estimate of the actual index (248.5) which was unavailable at the time this document was initially prepared.

**As of January, 1982, the Chemical Engineering Cost Index was updated and streamlined for greater accuracy. The January, 1982 index (308.7) using the old system is shown above for comparison. All index values after January, 1982, including the 1982 annual index, are based on the new system. For information on the revisions to the cost index, see "CE Plant Cost Index--Revised" in Chemical Engineering, Apr. 19, 1982, p. 153.

To update costs to January, 1980, the multiplier was the January 1980 index of 249.6 divided by the index value reflecting the year of the available estimate.

For cases where costs were unavailable for different process capacities, an appropriate factor was used to scale costs to the selected "typical" size. Where no better data were available, the 0.6 scale factor, as illustrated in the following equation, was used:

$$Cn = r^{0.6}Cp$$

where Cn is the new updated cost,
Cp is the previous cost, and
r is the ratio of the new to previous process capacity.

Where various equipment pieces were excluded, a price estimate was made using the GARD manual. This included items such as fans, ducts, dampers, etc.

Where installation costs were missing, the appropriate values from the GARD manual were used (i.e., ESP's = 75% of equipment, venturi scrubbers = 140% of equipment and fabric filters = 75% of equipment).

In cases where indirect capital charges were not included, an assumed value of 40 percent of direct installed cost was used as a conservative estimate of the costs of engineering, construction and field expense, construction fees, performance tests, shakedown and contingencies.

Where fixed annual capital charges were not available, a value of 17 percent of the turnkey investment was assumed.

APPENDIX B

LISTING OF CHEMICAL DUST SUPPRESSANTS

Appendix B contains a listing of chemical suppressants. Table B-1 presents limited information on various chemical suppressants concerning product type, costs, uses and application rates. Information was obtained from "Technical Guidance for Control of Industrial Process Fugitive Particulate Emissions". Information presented is as complete as was made available by the producers. Note that these are 1976 costs.

Table B-1. CHEMICAL DUST SUPPRESSANTS, THEIR COST, USES, AND APPLICATION RATES[a]

Company/address phone/contact	Product name/ product type	Cost	Uses/comments	Density, dilution and application rates
Dow Chemical Co. 2020 Dow Center Midland, Mich. 517-636-1000 Mr. Harold Filter	XFS - 4163L Styrene-Butadiene	55 gallon drums 1 drum - $2.65/gal 25 drums - $2.15/gal Bulk - $1.90/gal	Mulches such as straw, wood cellulose fiber and fiberglass. Used to prevent wind loss of mulches during stabilization periods such as reseeding periods.	8.5 lbs/gal. 40 gallons XFS - 4163L: 360 gallons water 400 gallons/acre
Witco Chemical Corp. Golden Bear Division Post Office Box 378 Bakersfield, Calif. 93302 805-399-9501 Mr. William Canessa	Coherex Cold water emulsion of petroleum resins	55 gallon drums 1-10 drums - $0.65/gal >10 drums - $0.63/gal Bulk - $0.38/gal	Unpaved haul roads and stockpiles. Can be used around human or animal habitats - very clean - no heat required. Can be stored for 12 months or longer. Must be protected from freezing - unless freeze stable type is used. Can be spread through any type of equipment used to spread water.	8.33 lb/gal. 1:4 dilution, 1-1.5 gal/yd^2 for parking lots and dirt roads. 1:7 dilution 0.5 to 1 gal/yd^2 for thin layer or loose dirt, light traffic, service roads. 1:10 dilution for aid in packing surface
	Semi-pave Cold asphalt cutback with antistrip agent	55 gallon drums 1-10 drums - $0.68/gal >10 drums - $0.64/gal Bulk - $0.39/gal	Penetration of unpaved areas - low traffic volume roads - parking lots, etc. Can be handled without heat if ambient temperature is 50°F or higher.	250 gallons/ton 0.6 to 0.8 gal/yd^2
American Cyanamid Wayne, New Jersey 07470 201-831-1234 Mr. L. S. Randolph	Aerospray 52 binder	55 gallon drums 1-4 drums - $0.69/lb 5-11 drums - $0.66/lb 12-22 drums - $0.63/lb 23-53 drums - $0.61/lb >53 drums - $0.59/lb Bulk - $0.55/lb	Seed membrane protection, excavation, construction, slope stabilization	8.8 lb/gallon 2:1 1 gallon/100 ft^2

[a] Mention of company or product names is not to be considered as an endorsement by the Ohio Environmental Protection Agency.

Table B-1 (continued). CHEMICAL DUST SUPPRESSANTS, THEIR COST, USES, AND APPLICATION RATES[a]

Company/address phone/contact	Product name/ product type	Cost	Uses/comments	Density, dilution and application rates
E. F. Houghton & Co. Valley Forge Tech. Center Madison & Van Buren Ave. Norristown, PA 19401 215-739-7100 Mr. Todd Sutcliffe	Surfax 5107	55 gallon drums 1-4 drums - $4.44/gal 5-9 drums - $4.41/gal 10-39 drums - $4.38/gal >39 drums - $4.35/gal	Coal loading, quarries, cement plants, crushers, sintering plants.	8.5 lb/gallon 1:1000 or higher
	Rezosol 5411-B Polymer	55 gallon drums 1-4 drums - $0.415/lb 5-9 drums - $0.41/lb 10-39 drums - $0.405/lb >39 drums - $0.40/lb	Storage piles, railcars, road sides.	8.75 lb/gal 1:30 40 gal/1000 ft^2, recommended 2 applications
Monsanto 800 N. Lindbergh Blvd. St. Louis, MO 63166 314-694-3453 Mr. James A. Cooper	Gelvatol 20-90 Polyvinyl alcohol resin	50 lb/bags 500 lb - $0.905/lb 2,000 lb - $0.80/lb 10,000 lb - $0.77/lb 30,000 lb - $0.74/lb >30,000 lb - <$0.725/lb	Surfactant and protective colloid in emulsion polymerization.	30-40 lbs/ft^3 10 to 20 percent by weight
	Gelva Emulsion S-55 Polyvinyl acetate homopolymer	55 gallon drums 1-3 drums - $0.27/lb 4-19 drums - $0.26/lb >19 drums - $0.25/lb Bulk - $0.205/lb	Adhesives	500 lb/55 gallon drum 1% by weight
Air Products & Chemicals, Inc. 5 Executive Rd. Suedesford Road Wayne, PA 19087	Vinol 540 Polymer (water soluble)	50 lb bags 500 lb - $0.80/lb 2,000 lb - $0.77/lb 10,000 lb - $0.74/lb 32,000 lb - $0.725/lb 120,000 lb - $0.72/lb	Two grades: 1) soluble in water (washed away with rain), 2) relatively insoluble in water.	1 to 7 percent by weight Slurried in cold water or heated to insure complete mixture in solution
Union Carbide Corp. West St. & Madisonville Rd Cincinnati, Ohio 45227 513-292-0206 Mr. Wm. Mike Brown	DCA-70		Stabilize steep grades, tailings ponds. Not for vegetation growth.	9.25 lb/gal 2:1

[a] Mention of company or product names is not to be considered as an endorsement by the Ohio Environmental Protection Agency.

Table B-1 (continued). CHEMICAL DUST SUPPRESSANTS, THEIR COST, USES, AND APPLICATION RATES[a]

Company/address phone/contact	Product name/ product type	Cost	Uses/comments	Density, dilution and application rates
Enzymatic Soil of Tucson 6622 N. Los Arboles Cr. Tucson, Arizona 85704 602-297-2133 Mr. Bob Mundell	Enzymatic SS	55 gallon drums $7.60/gallon	Hold down dust on haul roads, tailings, stock pile. Will retard growth of weeds or plants. Seal lakes, stock tanks, stabilize odors around stock pens.	8.34 lb/gal 1:1000 1000 gallon/20 to 30 yd^3
Asphalt Rubberizing Corp. 1111 S. Colorado Blvd. Denver, Colorado 80222 303-756-3012 Mr. Jewell Benson	Peneprime Low-viscosity, special hard-base asphalt cutback	10,000 gal lots $0.45/gal	Control of wind, rain or water erosion of soils. Applied to roads and streets to allay dust and stabilize surface to carry traffic. Does not allow seed germination. Very light applications (0.2-0.4 G.S.Y.) may accelerate seed germination due to warming of black surface. Applications above 0.4 G.S.Y. inhibit plant growths through hardness and toughness of the crust formed. Plant growths through the crust may be further inhibited by addition of several oil-soluble sterilants. Sterilants kill plant as it emerges. The material may be applied at temperatures as low as 75°F by conventional asphalt distribution equipment.	0.85 S.G. dust abatement - 0.2 gal/yd^2 erosion control - 0.5-1.0 gal/yd^2

[a] Mention of company or product names is not to be considered as an endorsement by the Ohio Environmental Protection Agency.

Table B-1 (continued). CHEMICAL DUST SUPPRESSANTS, THEIR COST, USES, AND APPLICATION RATES[a]

Company/address phone/contact	Product name/ product type	Cost	Uses/comments	Density, dilution and application rates
Johnson-March Co. 3018 Market St. Philadelphia, PA 19104 215-222-1411 Mr. Sam Jaffe	Compound-MR (regular)	55 gallon drums 1-3 drums - $6.00/gal 4-11 drums - $5.00/gal >11 drums - $3.35/gal	Usually used with a spray system or storage piles, conveying systems.	1:1000 water applied as needed
	Compound-SP-301	1-4 drums - $1.80/gal 5-9 drums - $1.75/gal 10-44 drums - $1.70/gal >45 drums - $1.65/gal	Used on haul roads, parking lots, stabilizing cleared areas, aid in vegetation growth.	1 gal/100 ft^2 ± depending on conditions. Application lasts 6 months to a year
	Compound-MR (super-concentrate)	$6.75/gal	Same as Compound-MR (regular)	1:3500 water
	Compound-SP-400	1-4 drums - $3.50/gal 5-9 drums - $3.40/gal 10-44 drums - $3.30/gal >44 drums - $3.20/gal	Same as Compound SP-301	Same as Compound SP-301 Application lasts 1 to 5 years
	Coal Tarp	$0.75-$1.00/gal	Designed for use in coal industry: coating over rail cars, trucks to prevent transportation losses, etc. Prevents seed germination.	
Grass Growers P. O. Box 584 Plainfield, NJ 07061 201-755-0923 Mr. Elsner	Tarratack-1	$2.25/lb	Mulch binder used for stabilizing any type of grass to be grown.	5 lb: 250 gal water, mixed with wood fiber mulch (40 lb/acre) 5 lb: 150 gal water, mixed with hay or straw (40 lb/acre)
	Tarratack-2	$2.75/lb	Same as Tarratack-1	Mixed with hay or straw 40 lb/acre
	Tarratack-3	$3.25/lb	Same as Tarratack-1	Mixed with wood fiber only

[a] Mention of company or product names is not to be considered as an endorsement by the Ohio Environmental Protection Agency.

Table B-1 (continued). CHEMICAL DUST SUPPRESSANTS, THEIR COST, USES, AND APPLICATION RATES[a]

Company/address phone/contact	Product name/ product type	Cost	Uses/comments	Density, dilution and application rates
Dubois Chemical Dubois Tower Cincinnati, Ohio 513-762-6000 Mr. Burger	Floculite 600	100 lb - $2.81/lb 1000 lb - $2.74/lb	Used in waste water treatment from mines. Also helps keep down dust on haul roads.	1-2 lb/1000 gal
Nona Industries, Inc. 65 E. 23rd St. Paterson, NJ 07524 201-274-8220 Mr. George Lowry	Nonawet Mo-70E	500 lb drums 1-50 drums - $0.455/lb Bulk - $0.385/lb	Used in coal industry as dust suppressant	0.1 percent in water, must be reapplied when water evaporates
AMSCO Division Union Oil Company of California 14445 Alondra Blvd. La Mirada, Calif. 90638 714-523-5120 Dr. Ralph H. Bauer	Res AB 1881 Styrene Butadiene		Soil stabilizer particularly in conjunction with wood fiber mulches. Free pumping in conventional hydroseeding equipment. Not to be applied in soils with pH less than 6.0.	8.2 ± 0.1 lb/gallon
Nalco Chemical Co. 2901 Butterfield Oak Brook, IL 60521 312-887-7500 Mr. R.E. Finch	Nalco 8800	55 gl. drums[b] .83¢ to .43¢ per pound. Bulk .593¢	Dust suppressant use with water sprays at transfer points, dump stations, etc.	Range from 1 to 200 to 1 to 2500 water as needed
	Nalco 8801	55 Gal. Drums[b]: $.41 to $.543/lb. Bulk: $.32/lb.	Dust Suppressant. Use with water sprays, longwalls, cont. miners. Transfer points.	Dosage from 1 in 1000 to 1 in 3500
	Nalco 8803	55 Gal. Drums[b]: $.940/lb. to $1.040/lb.	Tailings binder for revegetation and soil stabilization.	1 to 100 with water at .25 gallons of solution per square yard.
	Nalco 8806	Bulk: $1.36/gal.[b] Drums: Available by special order only.	Long-lasting road dust suppressant. Can in some cases eliminate watering for 60-90 days.	Neat at an average .25 gallons per square yard. Application Service available.

[a] Mention of company or product names is not to be considered as an endorsement by the Ohio Environmental Protection Agency.

[b] 1980 prices.

Table B-1 (continued). CHEMICAL DU SUPPRESSANTS, THEIR COST, USES, AND APPLICATION RATES[a]

Company/address phone/contact	Product name/ product type	Cost	Uses/comments	Density, dilution and application rates
Nalco Chemical Co. 2901 Butterfield Oak Brook, IL 60521	Nalco 8820	55 gl. drums[b] .565/lb. to .750/lb. Bulk .511/lb.	Binding agent for revegetation Pile binder prevents windage loss and conserves raw material	1 to 10 water at dosages ranging from .1 gallon to .3 gallons per square yard.
MATESON CHEMICAL CORPORATION Easton Division 1025 E. Montgomery Ave. Phila., PA 19125 (215) 423-3200 Mr. Mark Mateson	DUST-SET®, Dust Abator	55-gal. drum[b] 1-4 7.40/gal. 5-9 7.38/gal. 10-39 7.35/gal. > 39 7.30/gal.	Surfactant & protective adherent resinous media for dusty areas with high human density.	8.7 lbs. per gallon 1.500 ± 200 dil. margin 1 dil. gal. = 100 ft.^{2}
Midwest Industrial Supply, Inc. P.O. Box 8431 Canton, Ohio 44711 (216) 499-7888 Bob Vitale	SOIL-SEMENT™ Acyrlic resin emulsion	55 gallon drums[c] $1.96/gallon Bulk $.99/gallon	Binds fugitive dust from all sources (haul roads, parking and yard areas, stockpiles, ash, tailings). Stops dust; reduces rutting, potholes; increases load bearing strength; does not wash away or leach out. Mix with water and spray. Clean. Excellent weatherability to rain and ultraviolet light.	Heavy traffic - 1 gal/40 ft^2 Parking lot - 1 gal/60 ft^2 Road berm - 1 gal/80 ft^2 Yard area - 1 gal/80 ft^2 Ash, tailings - 1 gal/100 ft^2
	COALBINDER™	55 gallon drums[b] $2.27/gallon Bulk $2.04/gallon	Designed for use in coal industry as a dust suppressant: coating over open transport vessels to prevent transportation losses; eliminates airborne particulate matter on stockpiles.	Open transport vessels - 1 gal/300 ft^2 Stockpiles - 1 gal/300 ft^2

[a] Mention of company or product names is not to be considered as an endorsement by the Ohio Environmental Protection Agency.

[b] 1980 prices.

[c] 1981 prices.

Table B-1 (continued). CHEMICAL DUST SUPPRESSANTS, THEIR COST, USES, AND APPLICATION RATES[a]

Company/address phone/contact	Product name/ product type	Cost	Uses/comments	Density, dilution and application rates
Liquid Calcium Chloride Sales, Inc. P.O. Box 215 Kawkawlin, Mi. 48631 (517) 684-5860 Mr. Melvin Gerard Jr.	Liquidow (38%) Dowflake (77-80%) Calcium Chloride	$ 32.00 ton[c] $160.00 ton	Surface stabilization and dust control material. Attracts moisture from the air binding aggregate particles and fines together. Resists evaporation.	172 gals per ton 8 lbs per gal water yields 1.4 final volume gals. (350 gals per ton) Application rate: 1 gal per 50-60 sq. ft.
Neyra Industries, Inc. 5391 Wooster Road Cincinnati, OH 45226 (513) 321-5500 Mr. Bernie Schlake	Resinex 60 Cold water emulsion of petroleum derived resins.	55 gallon drums[b] $ .63/gallon Bulk $ .38/gallon	Unpaved haul roads, parking areas, stockpile access roads; non-toxic, non-corrosive, waterproof and stable after application. May be stored 12 months or longer. Applied diluted with any type of equipment used to apply water.	8.33#/gallon 1:5 Dilution: .75 to 1.25 gals/sq. yard (for parking lots and dirt roads) 1:8 Dilution: .3 to 1.0 gals/sq. yard for thin layer or loose dirt. 1:10 Dilution: for improved compaction of all unpaved surfaces and erosion prevention

[a] Mention of company or product names is not to be considered as an endorsement by the Ohio Environmental Protection Agency.

[b] 1980 prices.

[c] 1981 prices.

INSTRUCTIONS FOR INSERTING SUPPLEMENT NO. 1

INTO

REASONABLY AVAILABLE CONTROL MEASURES

FOR FUGITIVE DUST SOURCES

- Page i replaces same. Minor revision to table of contents.

- Pages v through viii, and xiii through xvii replace same. Addition of new figures and tables for Section 2.7.

- Pages 2-214 through 2-231g replace pages 2-214 through 2-231a and the four unnumbered pages in the appendix for Section 2.7. Major revision of entire section due primarily to the comments of the Ohio Cast Metals Federation (OCMF).

- Pages 2-232 through 2-241d replace pages 2-232 through 2-241 and the four unnumbered pages in the appendix for Section 2.8. Major revision of entire section due primarily to the comments of OCMF.

- Pages 2-471 through 2-489e replace pages 2-471 through 2-489 and the three unnumbered pages in the appendix for Section 2.22. Minor revision based on comments of the Ohio Ready Mix Concrete Association. Major revision to cost-benefit calculations.

- Pages A-2 and A-3 replace same. Cost indices updated, scale factor equation added, and minor revision.

- Page B-1 replaces same. Editorial changes.

- Pages B-6 through B-8 replace page B-6. Addition of more chemical dust suppressant suppliers.

SUPPLEMENT NO. 1

FOR

REASONABLY AVAILABLE CONTROL MEASURES FOR FUGITIVE DUST SOURCES

Ohio Environmental Protection Agency

Division of Air Pollution Control

Engineering Section

361 East Broad Street

Columbus, Ohio 43216

August, 1983

CONTENTS

	Page
Figures	iii
Tables	xi
1.0 Introduction	1-1
2.0 Reasonably Available Control Measures (RACM)	2-1
2.1 General Fugitive Dust Sources	2-3
2.1.1 Plant Roadways and Parking Areas	2-6
2.1.2 Aggregate Storage Piles	2-26
2.1.3 Material Handling	2-53
2.1.4 Mineral Extraction	2-65
2.2 Iron and Steel Mills	2-93
2.2.1 Coke Manufacturing	2-93
2.2.2 Iron Production	2-113
2.2.3 Steel Manufacture	2-134
2.3 Lime Plants	2-154
2.4 Power Plants	2-172
2.5 Grain Terminals	2-184
2.6 Country Grain Elevators	2-203
2.7 Iron Foundries	2-214
2.8 Steel Foundries	2-232
2.9 Glass Manufacturing Plants	2-242
2.10 Fiberglass Manufacturing	2-257
2.11 Secondary Aluminum Processing Plants	2-266
2.12 Fertilizer Mixing/Blending Plants	2-277
2.13 Cement Manufacturing and Blending Plants	2-289

CONTENTS (continued)

		Page
2.14	Ferroalloy Production	2-306
2.15	Metal Salvage Operations	2-320
2.16	Pulp and Paper Mills	2-329
2.17	Woodworking Operations	2-337
2.18	Aggregate Processing Plants	2-358
2.19	Coal Processing Plants	2-403
2.20	Brick and Related Clay Product Manufacturing Plants	2-445
2.21	Asphaltic Concrete Plants	2-459
2.22	Concrete Batching Plants	2-471
2.23	Sandblasting Operations	2-490
2.24	Petroleum Refineries	2-505
2.25	Agricultural Chemical Manufacturing Plants	2-513
2.26	Bulk Gasoline Terminals and Plants	2-524
2.27	Carbon Black Plants	2-532
2.28	Municipal Incineration	2-541
2.29	Salt Processing Operations	2-560
2.30	Galvanizing Plants	2-572
Appendix A:	Cost Estimation Guidelines for RACM for Fugitive Dust	A-1
Appendix B:	Listing of Chemical Dust Suppressants	B-1

FIGURES (continued)

Number		Page
2.5-16	Rack Dryer with Screen Filter	2-194a
2.5-17	Truck Loading Control System	2-194b
2.5-18	Boxcar Loading Control System	2-194c
2.5-19	Hopper Car Loading Control System	2-195a
2.5-20	Barge or Ship Loading Control System	2-195b
2.6-1	Simplified Process Flow Diagram for Country Grain Elevators and Associated Fugitive Particulate Emission Sources	2-204
2.6-2	Diagram of an Upright Country Grain Elevator	2-204a
2.7-1	Simplified Process Flow Diagram for Iron Foundries and Associated Fugitive Particulate Emission Sources	2-215
2.7-2	Iron Foundry Process Flow Diagram	2-215a
2.7-3	Cupola Furnace	2-215b
2.7-4	Electric Arc Furnace	2-216a
2.7-5	Channel Electric Induction Furnace	2-216b
2.7-6	Coreless Electric Induction Furnace	2-216c
2.7-7	Reverberatory Furnace	2-216d
2.7-8	Magnesium Treatment Methods for Producing Ductile Iron	2-216e
2.7-9	Sand Muller	2-217a
2.7-10	Building Evacuation System	2-223a
2.7-11	Mobile Tapping Hoods	2-223b
2.7-12	Hooded Pouring Station	2-224a
2.7-13	Movable Pouring Hood	2-224b
2.7-14	A Casting Shakeout Control System	2-224c
2.7-15	Capture Design for a Typical Sand-Handling System	2-224e

FIGURES (continued)

Number		Page
2.8-1	Simplified Process Flow Diagram for Steel Foundries and Associated Fugitive Particulate Emission Sources	2-233
2.9-1	Simplified Process Flow Diagram for Manufacture of Soda-Lime Glass and Associated Fugitive Particulate Emission Sources	2-243
2.9-2	Side-Port Continuous Regenerative Furnace	2-245
2.9-3	End-Port Continuous Regenerative Furnace	2-246
2.10-1	Simplified Process Flow Diagram of Fiberglass Manufacture and Associated Fugitive Particulate Emission Sources	2-258
2.11-1	Simplified Process Flow Diagram for Secondary Aluminum Processing Plants and Associated Fugitive Particulate Emission Sources	2-267
2.12-1	Typical Flow Diagram for Fertilizer Mixing/ Blending Facilities and Associate Fugitive Particulate Emission Sources	2-278
2.12-2	Bulk Loading Station With Elevated Storage Used in Fertilizer Mixing/Blending Plants	2-280
2.12-3	A Bulk Blending Plant With Fugitive Dust Emission Controls Consisting of Skirts Around Railcar Unloading and a Series of Hoods Ducted to a Fabric Filter	2-283a
2.12-4	Dust Suppressant Application System	2-283b
2.12-5	Bucket Elevators Used at Bulk Blending Plants	2-286a
2.13-1	Typical Rotary Ball Mill Configuration	2-292
2.13-2	Simplified Process Flow Diagram for Portland Cement Production and Associated Fugitive Particulate Emission Sources	2-293
2.14-1	Simplified Process Flow Diagram for Ferroalloy Production and Associated Fugitive Particulate Emission Sources	2-307
2.14-2	Submerged-Arc Furnace for Ferroalloy Production	2-309
2.15-1	Process Schematic for Metal Salvage/Auto Shredding Illustrating Potential Fugitive Particulate Emission Points	2-321

FIGURES (continued)

Number		Page
2.16-1	Simplified Process Flow Diagram for Raw Material Preparation for Wood Pulping Processes at Pulp and Paper Mills, and Associated Fugitive Particulate Emission Sources	2-330
2.16-2	Typical Kraft Sulfate Pulping and Recovery Process	2-332
2.17-1	Cross-Section of a Typical Wood Hogging Machine	2-341
2.17-2	Simplified Process Flow Diagram for Wood-working Operations at Several Wood Product Manufacturing Plants and Associated Fugitive Particulate Emission Sources	2-342
2.17-3	Cement-Receiving and Storage System	2-350
2.18-1	Simplified Process Flow Diagram for Sand and Gravel Processing Plants and Associated Fugitive Particulate Emission Sources	2-360
2.18-2	Simplified Process Flow Diagram for Crushed Stone Processing and Associated Fugitive Particulate Emission Sources	2-361
2.18-3	Simplified Process Flow Diagram for Slag Processing and Associated Fugitive Particulate Emission Sources	2-362
2.18-4	Double-Toggle Jaw Crusher	2-366
2.18-5	Single-Toggle Jaw Crusher	2-367
2.18-6	Pivoted-Spindle Gyratory Crusher	2-368
2.18-7	Cone Gyratory Crusher	2-368
2.18-8	Single-Roll Crusher	2-369
2.18-9	Double-Roll Crusher	2-370
2.18-10	Hammermill Crusher	2-370
2.18-11	Impact Crusher	2-371
2.18-12	Vibrating Grizzly	2-372
2.18-13	Vibrating Screen	2-372
2.18-14	Belt Conveyor Transfer Point	2-374
2.18-15	Types of Bucket Elevators	2-375

FIGURES (continued)

Number		Page
2.18-16	Wet Dust-Suppression System	2-385
2.18-17	Wet Dust-Suppression Application at a Crusher Discharge Point	2-387
2.18-18	Hood Configuration for a Transfer Point Having a Free-Fall Distance Less Than 3 Feet	2-388
2.18-19	Hooding Configuration for a Transfer Point Having a Free-Fall Distance Greater Than 3 Feet	2-389
2.18-20	A Combination Control System Consisting of Wet Suppression and Dry Collection	2-390
2.19-1	Simplified Process Flow Diagram for Coal Processing Plants and Associated Fugitive Particulate Emission Sources	2-405
2.19-2	A Coal Sizing Circuit at a Coal Preparation Plant	2-408
2.19-3	Rotary Breaker	2-409
2.19-4	Hammermill	2-410
2.19-5	Single-Roll Coal Crusher	2-411
2.19-6	Double-Roll Coal Crusher	2-411
2.19-7	Ring Coal Crusher	2-411
2.19-8	Pneumatic Cleaning Circuit	2-414
2.19-9	Air Table	2-415
2.19-10	Jig-Table Cleaning Circuit	2-416
2.19-11	Air-Pulsated Jig	2-417
2.19-12	Deister Table	2-417
2.19-13	Heavy-Media Cleaning Circuit	2-419
2.19-14	Heavy-Media Cyclone	2-420
2.19-15	Water Clarification Circuit	2-421
2.19-16	Froth Flotation Unit	2-423
2.19-17	Screen-Type Thermal Coal Dryer	2-425
2.18-18	Cascade Thermal Coal Dryer	2-425

TABLES (continued)

Number		Page
2.2.2-2	A Summary of the Control Alternatives, Efficiencies and Costs, and the RACM Selections for Fugitive Dust Emissions from Sources in Iron Production	2-125,126, 2-127,128
2.2.3-1	Fugitive Dust Emission Factors for Steel Manufacturing	2-141
2.2.3-2	A Summary of the Control Alternatives, Efficiencies and Costs, and the RACM Selections for Fugitive Dust Emissions from Sources in Steel Manufacturing	2-147,148
2.3-1	Fugitive Dust Emission Factors for Lime Manufacturing	2-158
2.3-2	A Summary of the Control Alternatives, Efficiencies and Costs, and the RACM Selections for Fugitive Dust Emissions from Lime Plants	2-163,164,165
2.4-1	Fugitive Dust Emission Factors for Coal-Fired Power Plants	2-175
2.4-2	A Summary of the Control Alternatives, Efficiencies and Costs, and the RACM Selections for Fugitive Dust Emissions from Sources at Coal-Fired Power Plants (500 MW)	2-178,179,180
2.5-1	Fugitive Dust Emission Factors for Grain Terminals	2-188
2.5-2	Particulate Size Distribution for Dust from an Elevator Leg Cyclone (Inlet Test)	2-190
2.5-3	A Summary of the Control Alternatives, Efficiencies and Costs, and the RACM Selections for Fugitive Dust Emissions from Sources at Grain Terminals	2-196,197
2.6-1	Fugitive Dust Emission Factors for Country Grain Elevators	2-207
2.6-2	Particulate Size Distribution for Dust from an Elevator Leg Cyclone (Inlet Test)	2-209
2.6-3	A Summary of the Control Alternatives, Efficiencies and Costs, and the RACM Selections for Fugitive Dust Emissions from Sources at Country Grain Elevators	2-210,210a
2.7-1	Fugitive Dust Emission Factors for Iron Foundries	2-219

TABLES (continued)

Number		Page
2.7-2	Particulate Emission Characteristics for Various Foundry Operations	2-221,221a
2.7-3	Chemical Composition of Cupola Dust	2-221b
2.7-4	Particle Size Distribution of Dust Emissions from Both Cold and Hot Blast Cupola Furnace Stacks	2-221b
2.7-5	Size Distribution for Particulate Emissions from Eighteen Cupola Furnace Installations	2-221b
2.7-6	Chemical Analysis of Particulate Emissions from an Electric Arc Furnace	2-221c
2.7-7	Particle-Size Distribution for Particulate Emissions from Three Electric-Arc Furnace-Installations	2-221d
2.7-8	A Summary of the Control Alternatives, Efficiencies and Costs, and the RACM Selections for Fugitive Dust Emissions from Sources at Iron Foundries	2-226,227,228
2.8-1	Fugitive Dust Emission Factors for Steel Foundries	2-235
2.8-2	A Summary of the Control Alternatives, Efficiencies and Costs, and the RACM Selections for Fugitive Dust Emissions from Sources at Steel Foundries	2-237,238
2.9-1	Fugitive Dust Emission Factors for Glass Manufacturing Plants	2-249
2.9-2	A Summary of the Control Alternatives, Efficiencies and Costs, and the RACM Selections for Fugitive Dust Emissions from Sources at Glass Manufacturing Plants	2-251
2.10-1	Fugitive Dust Emission Factors for Fiberglass Manufacturing	2-260
2.10-2	A Summary of the Control Alternatives, Efficiencies and Costs, and the RACM Selections for Fugitive Dust Emissions from Sources at Fiberglass Manufacturing Plants	2-262
2.11-1	Fugitive Dust Emission Factors for Secondary Aluminum Processing Plants	2-271
2.11-2	Effluent Characteristics from Secondary Aluminum Production	2-270

TABLES (continued)

Number		Page
2.11-3	A Summary of the Control Alternatives, Efficiencies and Costs, and the RACM Selections for Fugitive Dust Emissions from Sources at Secondary Aluminum Processing Plants	2-274,274a
2.12-1	Fugitive Dust Emission Factors for Fertilizer Mixing/Blending Plants	2-282
2.12-2	A Summary of the Control Alternatives, Efficiencies and Costs, and the RACM Selections for Fugitive Dust Emissions from Sources at Fertilizer Mixing and Blending Plants	2-284,285
2.13-1	Raw Materials Used in Producing Portland Cement in the United States	2-290
2.13-2	Fugitive Dust Emission Factors for Cement Production	2-295
2.13-3	A Summary of the Control Alternatives, Efficiencies and Costs, and the RACM Selections for Fugitive Dust Emissions from Sources at Cement Manufacturing and Blending Plants	2-301,302,303
2.14-1	Fugitive Dust Emission Factors for Ferroalloy Production	2-311
2.14-2	A Summary of the Control Alternatives, Efficiencies and Costs, and the RACM Selections for Fugitive Dust Emissions from Sources at Ferroalloy Production Plants	2-314,315
2.15-1	A Summary of the Control Alternatives, Efficiencies and Costs, and the RACM Selections for Fugitive Dust Emissions from Sources at Metal Salvage Operations	2-323,324
2.17-1	Fugitive Dust Emission Factors for Woodworking Operations	2-344
2.17-2	Approximate Size Range of Typical Components of Wood Fuel	2-346
2.17-3	A Summary of the Control Alternatives, Efficiencies and Costs, and the RACM Selections for Fugitive Dust Emissions from Sources in Woodworking Operations	2-352,353,354
2.18-1	Fugitive Dust Emission Factors for Aggregate Processing Plants	2-378,379
2.18-2	A Summary of the Control Alternatives, Efficiencies and Costs, and the RACM Selections for Fugitive Dust Emissions from Aggregate Processing Plants	2-395,396,397

TABLES (continued)

Number		Page
2.19-1	Coal Size Ranges for Cleaning Equipment	2-412
2.19-2	Fugitive Dust Emission Factors for Coal Processing Plants	2-431
2.19-3	A Summary of the Control Alternatives, Efficiencies and Costs, and the RACM Selections for Fugitive Dust Emissions from Coal Processing Plants	2-437,438,439,44
2.20-1	Fugitive Dust Emission Factors for Brick and Related Clay Product Manufacturing Plants	2-453
2.20-2	A Summary of the Control Alternatives, Efficiencies and Costs, and the RACM Selections for Fugitive Dust Emissions from Brick and Related Clay Product Manufacturing Plants	2-456
2.21-1	Fugitive Dust Emission Factors for Asphaltic Concrete Manufacturing	2-465
2.22-1	Fugitive Dust Emission Factors for Concrete Batching Plants	2-474
2.22-2	Physical Characteristics of Three Common Grades of Cement	2-475
2.22-3	A Summary of the Control Alternatives, Efficiencies and Costs, and the RACM Selections for Fugitive Dust Emissions from Concrete Batching Plants	2-484,485,486
2.23-1	Fugitive Dust Emission Factors for Sandblasting Operations	2-495
2.23-2	Typical Size Distribution of Fugitive Dust Particles as a Result of Sandblasting	2-496
2.23-3	A Summary of the Control Alternatives, Efficiencies and Costs, and the RACM Selections for Fugitive Dust Emissions from Sandblasting Operations	2-501
2.25-1	Fugitive Dust Emission Factors for Urea Manufacturing	2-518
2.25-2	A Summary of the Control Alternatives, Efficiencies and Costs, and the RACM Selections for Fugitive Dust Emissions from Agricultural Chemical Manufacturing Plants	2-521

TABLES (continued)

Number		Page
2.27-1	A Summary of the Control Alternatives, Efficiencies and Costs, and the RACM Selections for Fugitive Dust Emissions from Carbon Black Plants	2-538
2.28-1	Fugitive Dust Emission Factors for Municipal Incineration	2-545
2.28-2	Range in Composition of Residential Solid Wastes in 21 U.S. Cities	2-547
2.28-3	Typical Composition of Municipal Solid Waste	2-548
2.28-4	Examples of Hazardous Wastes in Municipal Solid Waste	2-550
2.28-5	Physical Properties of Particles Leaving Furnace	2-551
2.28-6	Chemical Analysis of Flyash Samples from South Shore Incinerator, New York City, by Source	2-552
2.28-7	Spectrographic Analysis of Ashed Incinerator Particulate Matter	2-553
2.28-8	A Summary of the Control Alternatives, Efficiencies and Costs, and the RACM Selections for Fugitive Dust Emissions from Municipal Incineration	2-556
2.29-1	Specification Guidelines for Different Grades of Salt	2-561
2.29-2	A Summary of the Control Alternatives, Efficiencies and Costs, and the RACM Selections for Fugitive Dust Emissions from Salt Processing Operations	2-568,569
2.30-1	Fugitive Dust Emission Factors for Galvanizing Plants	2-577
2.30-2	Chemical Analyses of the Fumes Collected by a Baghouse and by an Electrostatic Precipitator from Zinc Galvanizing Kettles	2-579
2.30-3	A Summary of the Control Alternatives, Efficiencies and Costs, and the RACM Selections for Fugitive Dust Emissions from Sources at Galvanizing Plants	2-583

2.7 IRON FOUNDRIES

2.7.1 Process Description[1-7]

Foundries produce castings for automotive parts, light and heavy machinery, pipe and a wide range of miscellaneous products. The process involves melting scrap metal and/or pig iron (crude iron in the form of blocks weighing about 100 pounds) and pouring the molten metal into prepared molds. The two major categories are "iron" foundries and "steel" foundries. Iron foundries may be further subdivided into "gray iron", "malleable iron" and "ductile iron" foundries. Both iron and steel consist primarily of elemental iron but with differing carbon content. Iron contains 2 to 4 percent carbon, and steel contains 1 percent or less. Iron formulations also incorporate various amounts of other elements. For example, silicon content is generally in the range of 2 to 3 percent in iron formulations.[8] Steel may also contain alloying elements.

Iron foundries may be further classified as either "captive" or "jobbing" foundries. A captive foundry is one that is a regular operating element of a manufacturing establishment and whose castings are generally made for the products of the parent company. In contrast, a jobbing foundry is one that manufactures a variety of castings which are not used in its own products, but are made for the products of other companies.

Figures 2.7-1 and 2.7-2 illustrate the process flow in a typical iron foundry. The basic process flow is essentially the same regardless of whether the foundry is captive or job shop. About 70 percent of the iron melted in the U.S. is produced in a cupola furnace.[9] Cupola capacities range from 1 to 100 tons of molten metal per hour. Over 60 percent operate in the range of 3 to 11 tons per hour. (Figure 2.7-3 illustrates a typical cupola furnace.) The other types of furnaces used in iron foundries are

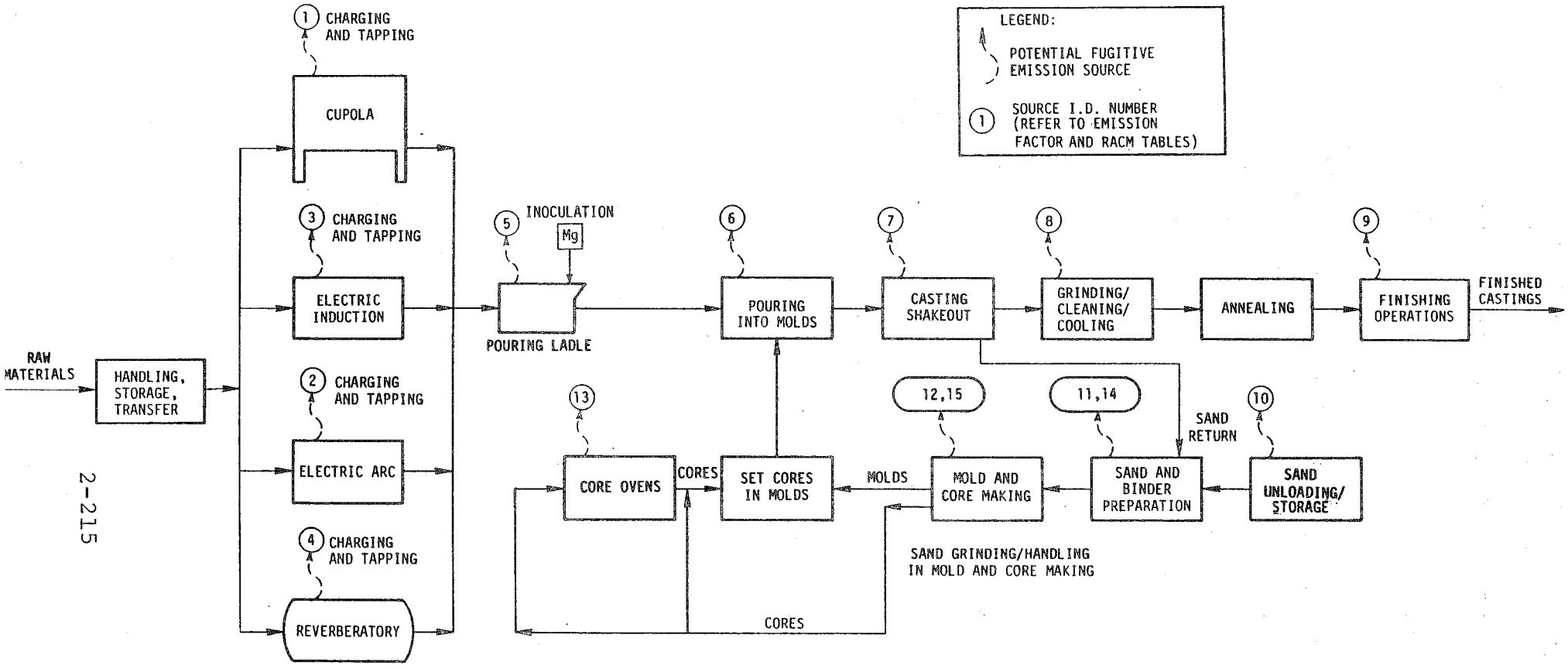

Figure 2.7-1. Simplified process flow diagram for iron foundries and associated fugitive particulate emission sources.

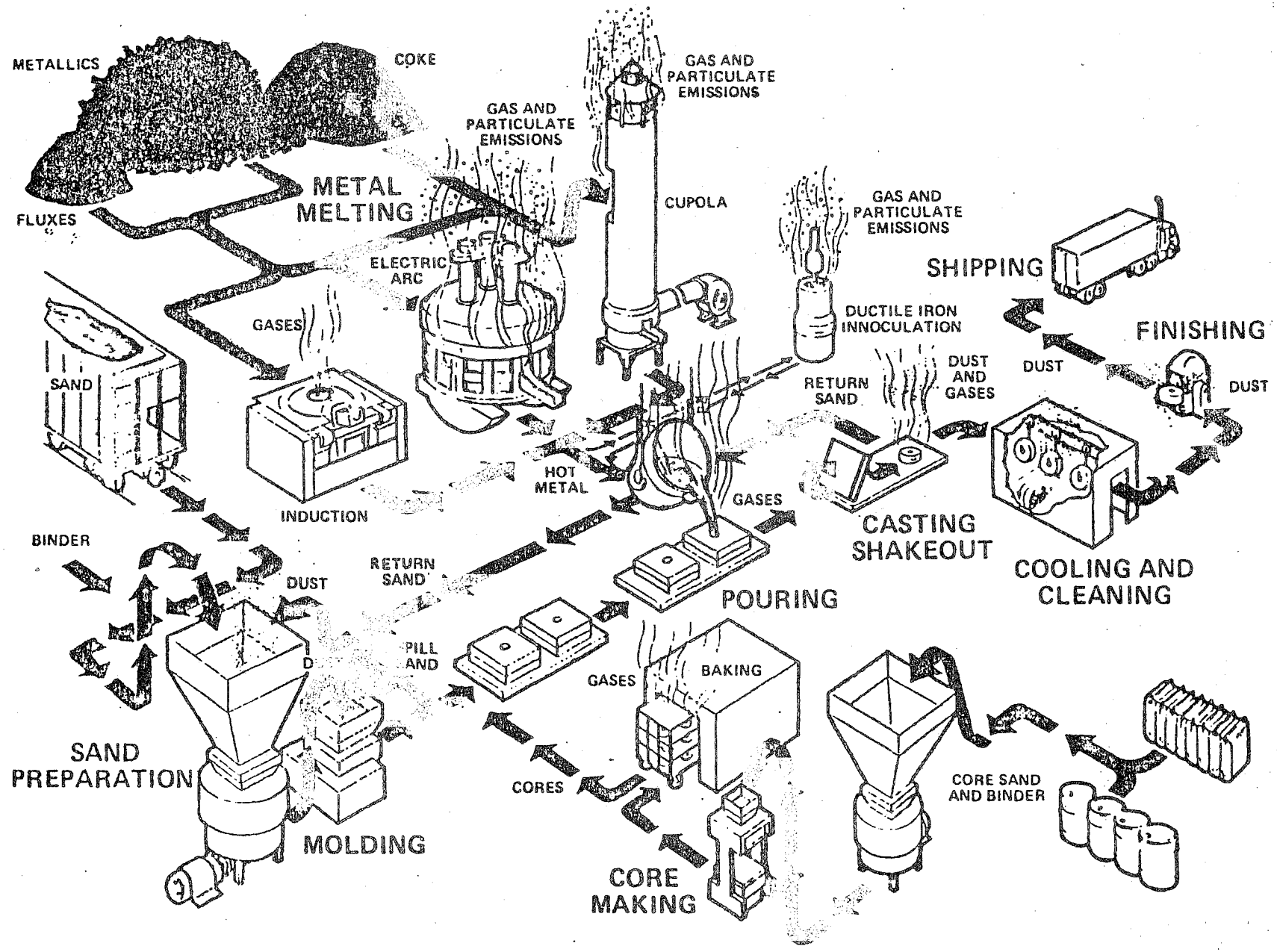

Figure 2.7-2. Iron foundry process flow diagram.[10]

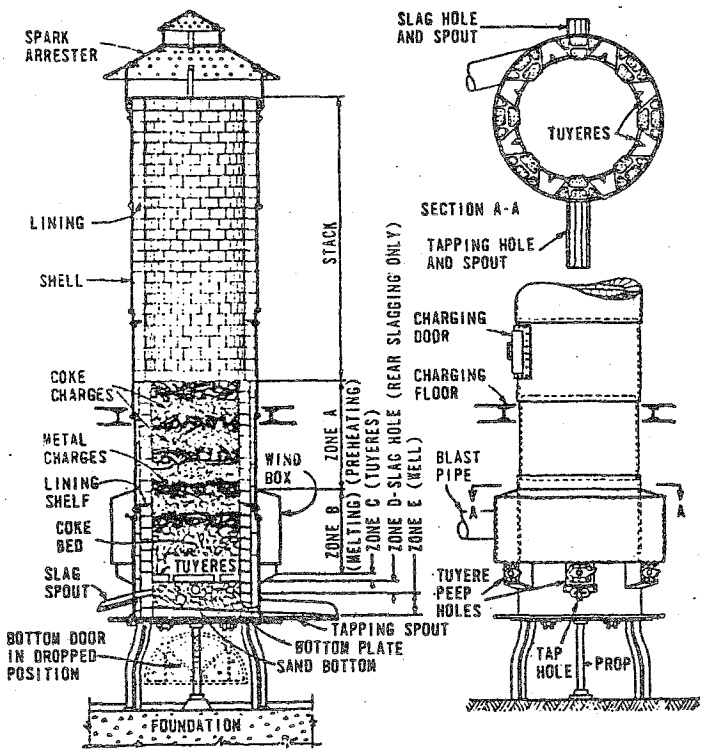

Figure 2.7-3. Cupola furnace.[11]

electric arc, electric induction and reverberatory. (These furnaces are shown in Figures 2.7-4 to 2.7-7.)

Raw materials are charged into the cupola through a door in the top of the furnace. The raw materials consist of iron and/or steel scrap, pig iron, flux materials, ferrosilicon and coke. Fluxes are limestone or similar minerals, that absorb impurities after the charge has melted. Coke is essentially pure carbon in lump form. The burning of the coke provides the heat to melt the raw materials. As the charge melts, it descends to the bottom of the furnace where the molten metal product is drained out periodically. Fresh raw materials are added to keep the furnace full. Operation of cupola furnaces can be done on a continuous basis.

The charge for electic arc, electric induction and reverberatory furnaces consists mainly of iron and/or steel scrap, pig iron and limestone. The reverberatory furnace is heated by firing gas or oil. These furnaces are operated on a batch basis.

The molten metal is tapped from the furnace at a temperature of about 2900°F into a ladle or into a holding furnace until it is ready to be drained into a ladle. The ladle is transported to the mold line, and molten metal is poured into prepared molds. The molds contain the molten iron within the mold form until it solidifies. In production of high strength ("ductile iron") castings, magnesium is added to the molten iron by a process called inoculation. (See Figure 2.7-8 for an illustration of the magnesium treatment methods used to produce ductile iron.) After solidification, the sand molds and castings are separated, and the sand is recycled to the mold making operation. Castings are shaken out of the molds, or the molds are broken away from the castings. When sufficiently

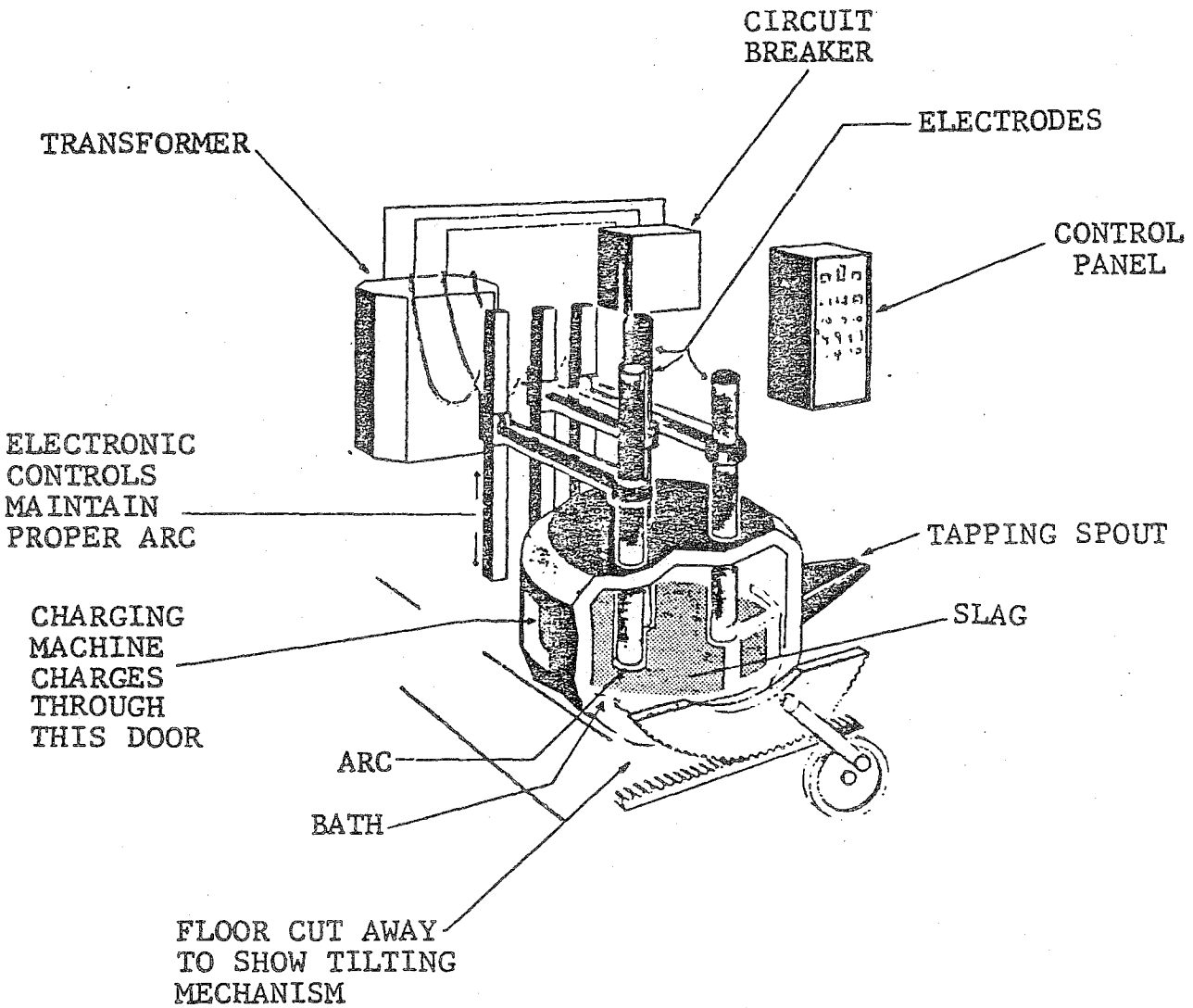

Figure 2.7-4. Electric arc furnace.[12]

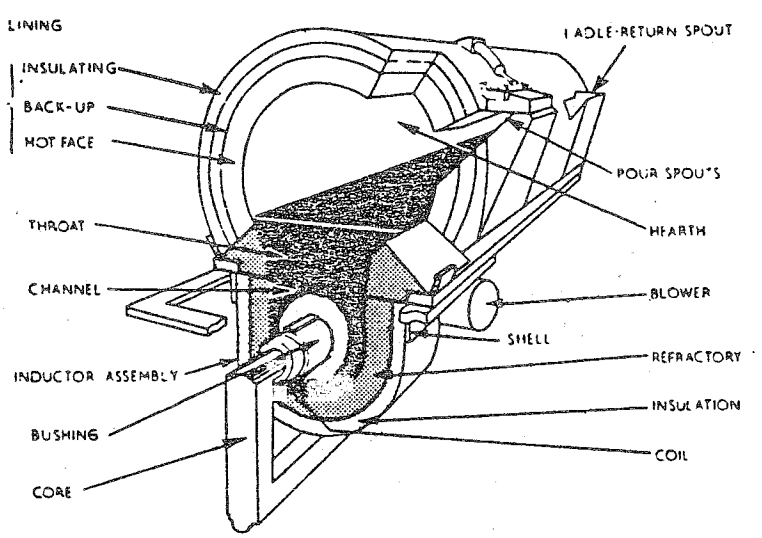

Figure 2.7-5. Channel electric induction furnace.[13]

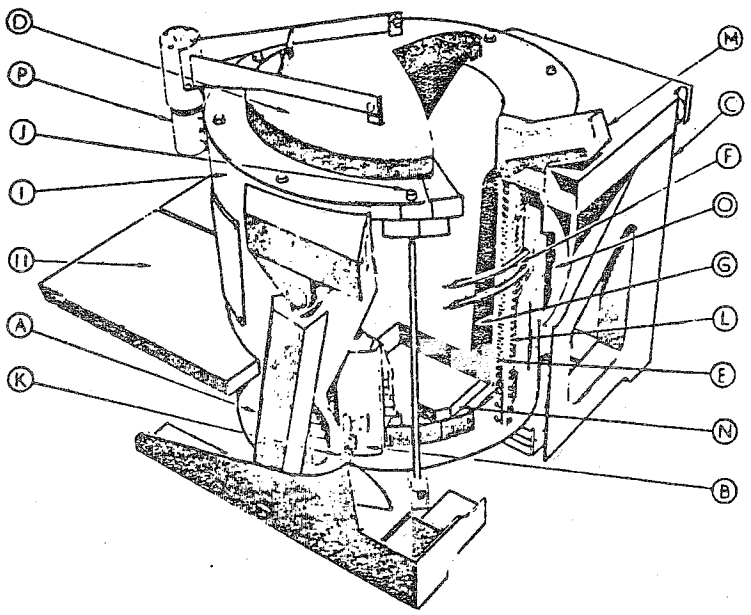

A. HYDRAULIC TILT CYLINDERS
B. SHUNTS
C. STANCHION
D. COVER
E. COIL
F. LEADS
G. WORKING REFRACTORY
H. OPERATOR'S PLATFORM
I. STEEL SHELL
J. TIE RODS
K. CLAMPING BOLTS
L. COIL SUPPORT
M. SPOUT
N. REFRACTORY BRICK
O. ACCESS PORT
P. LID HOIST MECHANISM

Figure 2.7-6. Coreless electric induction furnace.[14]

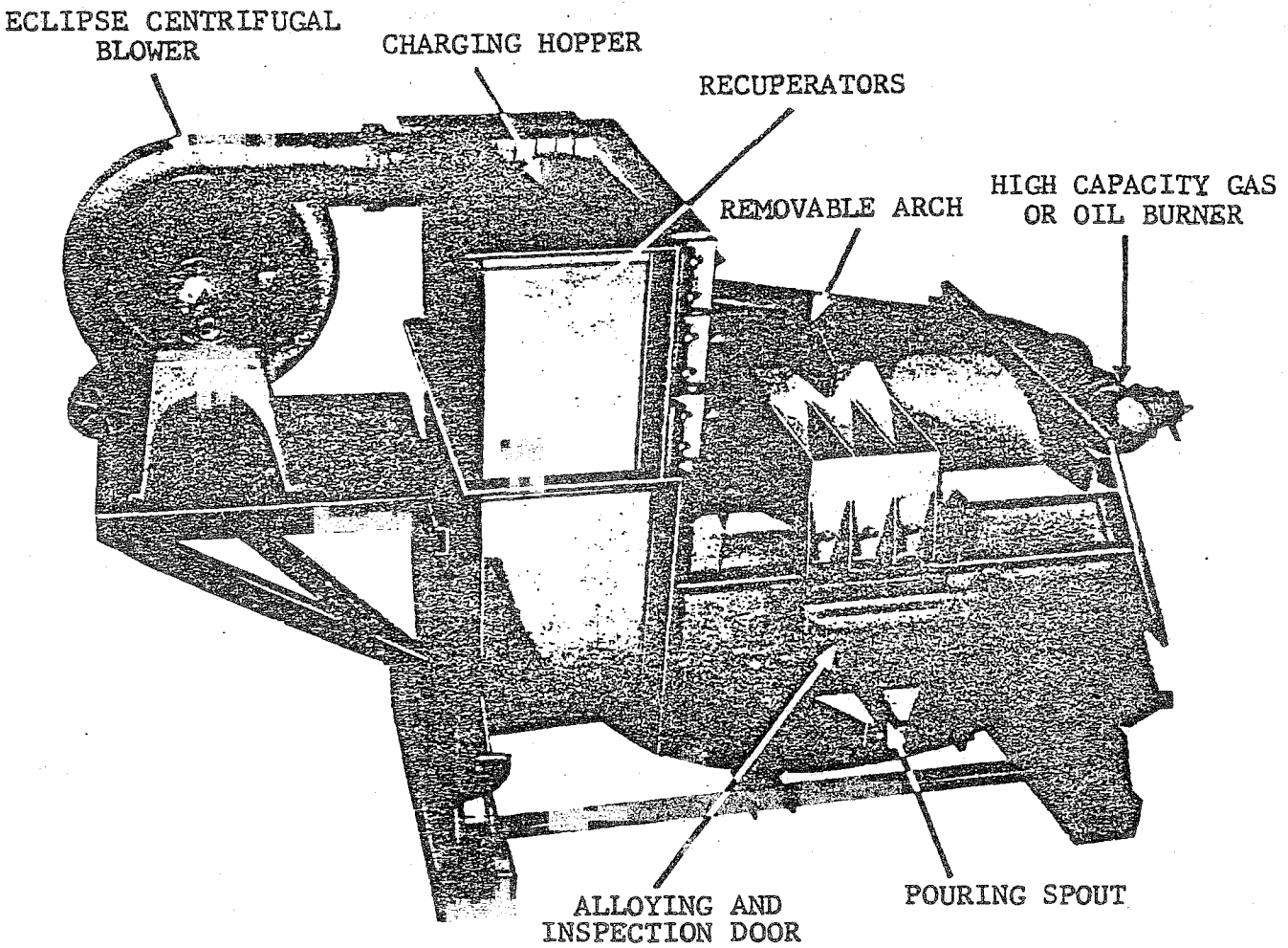

Figure 2.7-7. Reverberatory furnace.[15]

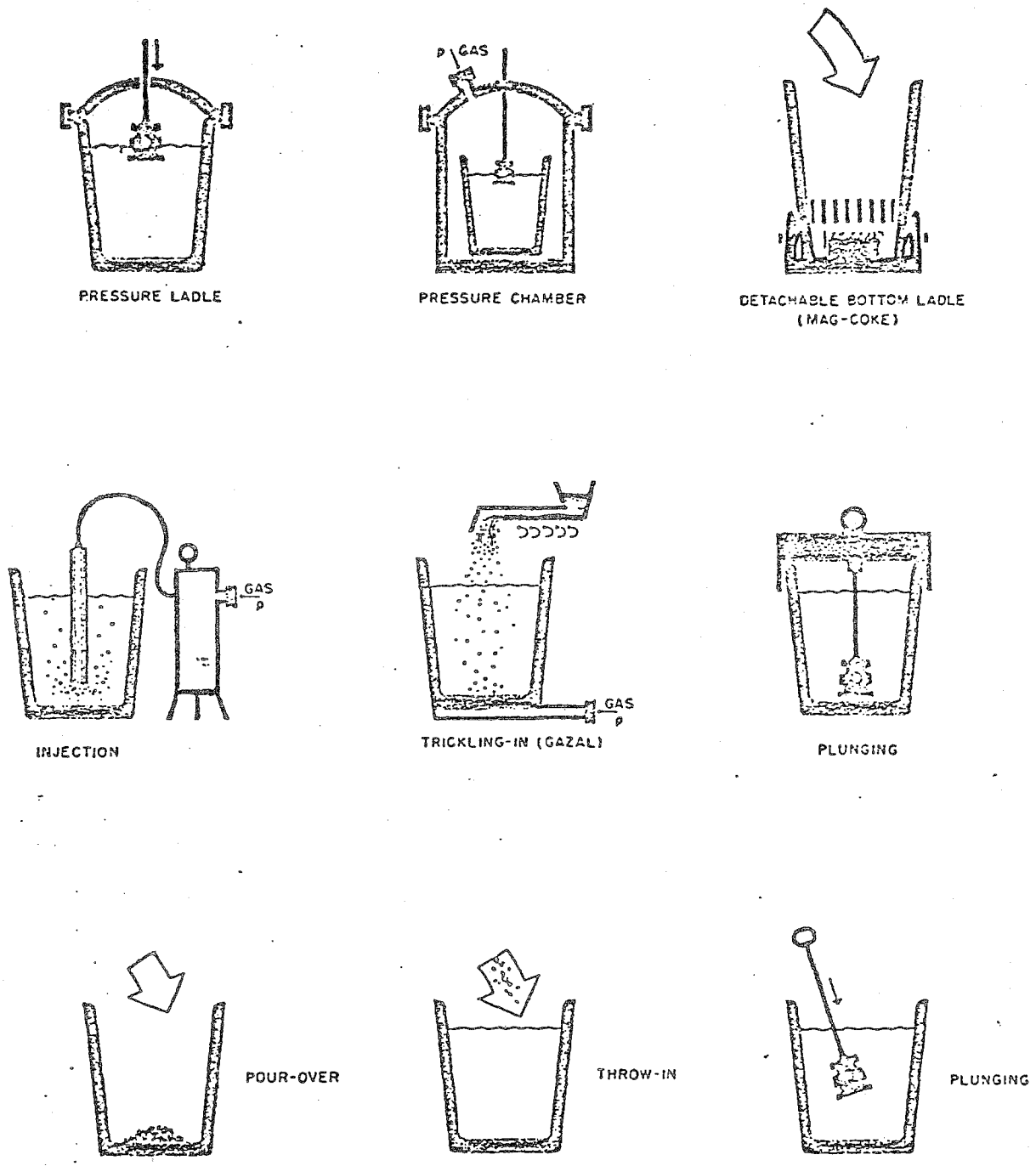

Figure 2.7-8. Magnesium treatment methods for producing ductile iron.[16]

cool, the castings are cleaned by shot blasting, and the remaining excess metal (gates, sprue, risers, flash, etc.) is removed by sawing, grinding, chipping, cutting, etc. These processes are generally housed in an enclosure.

Castings intended for certain uses may be annealed (heat treated) for several hours at temperatures of 1000 to 1600°F. Heat treating furnaces, fired by gas, oil or electricity, are referred to by such names as "annealing", "hardening", "car-bottom" and "traveling hearth" furnaces. Castings that have been annealed in the present of sufficient silicon are referred to as malleable iron castings. Some ductile iron castings, which are produced by inoculating the melt with a small amount of magnesium just prior to casting, are also often subjected to annealing. Finishing operations such as shot or sand blasting, grinding and surface coating may follow the heat treatment.

Production of molds and cores is an integral part of the foundry operation. A mold is made of sand mixed in a muller (see Figure 2.7-9) with water and binders, such as clay or resins. Pitch is sometimes added to the mold mixture primarily to prevent surface defects on the castings. A core is a separable part of the mold used to form a cavity in the casting. Cores are also made of sand and binders. Cores may be produced by any one of a number of processes including hot box, cold box, air set, shell and oil-sand methods.[17] In the oil-sand process, after the cores are formed in the desired shape, they are cured either in a baking oven (core oven) at 300-500°F or at room temperature. Curing evaporates moisture and hardens the sand mixture. Core ovens are fired with gas or oil.

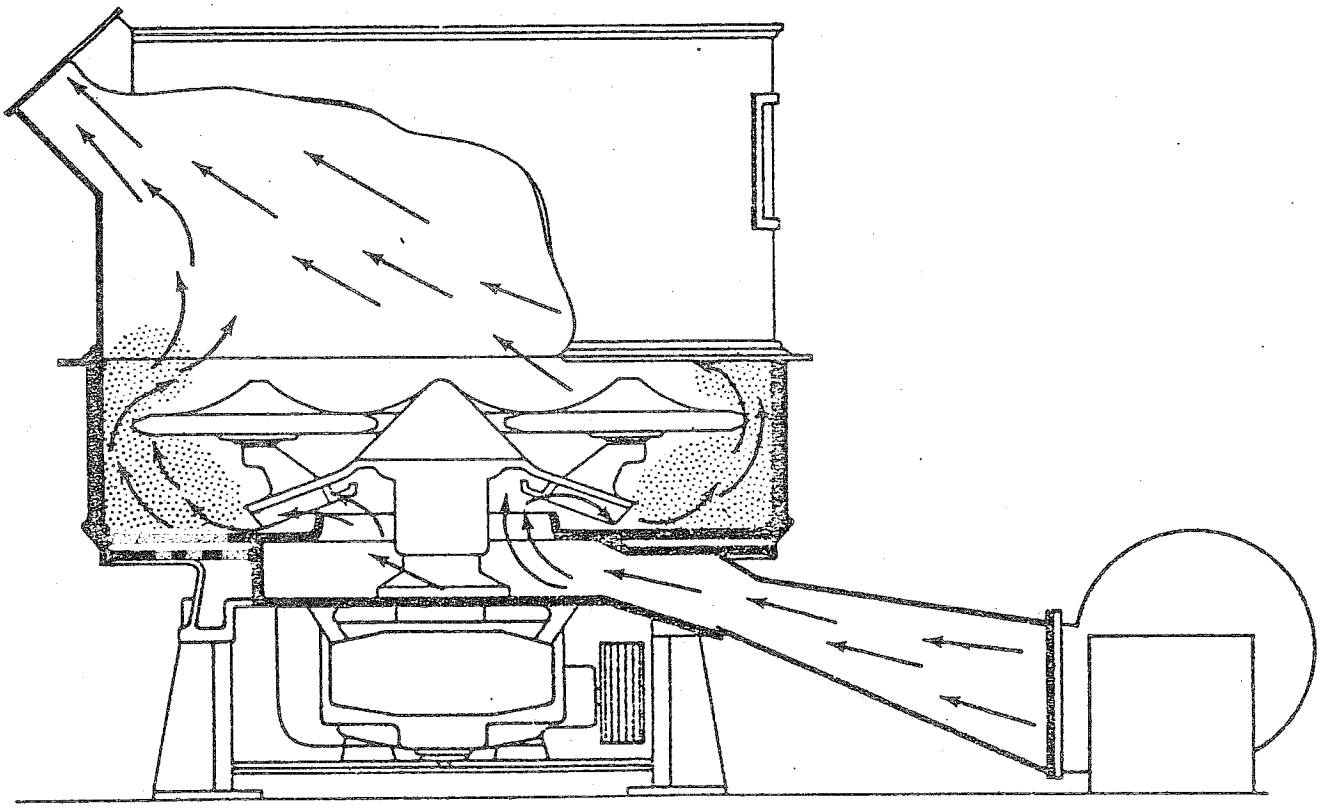

Figure 2.7-9. Sand muller.[18]

The potential sources of fugitive emissions in iron foundries include raw material receiving, storage and handling, melting furnace charging and tapping, iron inoculation, molten iron transporting and pouring, casting, shakeout, cooling, cleaning and finishing, and core and mold making. Each of these sources is identified in Figures 2.7-1 and 2.7-2.

2.7.2 Fugitive Dust Emission Factors

The estimated emission factors for iron foundry fugitive particulate sources are summarized in Table 2.7-1. Most of these emissions factors are based on "engineering judgment" (source's terminology) and very sparse test data. They should be considered of poor reliability. Emission factors were not included for coke handling and storage at iron foundries. These factors are discussed in Section 2.2.2-2. Factors are also not included for raw material handling, storage and transfer operations due to a lack of data. These sources are deemed to be insignificant as far as steel/iron scrap is concerned.

The emission factors for charging and tapping of the various furnace types, with the exception of electric induction furnaces, were derived by assuming a percentage of total furnace emissions. The emission factor for electric induction furnaces represents total furnace emissions including charging and tapping emissions. No test data were available; and, therefore, these factors are unconfirmed and have a very poor reliability rating.

The other emission factors are based upon very sparse test data and the source's engineering judgment. The reliability rating for these factors is also very poor.

TABLE 2.7-1. FUGITIVE DUST EMISSION FACTORS FOR IRON FOUNDRIES

	Source	Emission factor	Reliability Rating	Reference
1	Cupola furnace charging and tapping	0.1 to 2.0 lb/ton iron produced	E	1
2	Electric arc furnace charging and tapping	0.7 lb/ton iron charged[a] 1.4 lbs/ton iron charged[b]	E	19
3	Electric induction furnace melting, charging and tapping	1.5 lb/ton iron produced	E	1
4	Reverberatory furnace charging and tapping	0.1 lb/ton iron produced	E	3
5	Ductile iron inoculation	3.3 to 4.5 lb/ton iron produced	D	4,5
6	Pouring molten metal into molds	0.1 to 4.13 lb/ton iron produced	D	4,6
7	Casting shakeout	1.2 to 12.8 lb/ton iron produced	E	4,7
8	Cooling and cleaning castings	0.16 to 0.8 lb/ton castings produced	D	4,7
9	Finishing castings	0.01 lb/ton castings produced	E	7
10	Core and mold sand unloading and storage:			
	mechanical handling	0.03 lb/ton sand unloaded[c]	E	20
	pneumatic handling	NA		
11	Core sand and binder mixing	0.3 lb/ton sand mixed	E	2
		or		
		0.75 to 8.24 lb/ton iron produced	E	4,7
12	Core making	0.35 lb/ton cores produced	E	2
13	Core baking	0.03 to 5.4 lb/ton cores baked	E	7,9,20
14	Mold sand preparation	1.3 lb/ton castings produced	E	4
15	Mold making	0.04 lb/ton castings produced	E	7

NA = Not available
[a]With no alloying in the ladle.
[b]With alloying in the ladle.
[c]Sand unloading emission factor is assumed to be equivalent to the taconite pellets unloading emission factor as presented in Section 2.1.3. Fugitive dust emissions from storage are estimated to be negligible since sand is normally stored indoors.

2.7.2 Particle Characterization[21]

The composition and particle size of dusts from various foundry operations will vary considerably. For example, dusts from a casting shakeout are mostly very fine carbonaceous material. On the other hand, dust from the grinding of castings contains coarse, freshly fractured particles, along with elemental iron, iron oxide and sand particles. Table 2.7-2 indicates the characteristics and sources of emissions in various foundry operations.

Much of the information available on particle characteristics is for the stack (non-fugitive) emissions from cupola and electric arc furnaces. However, since such information may be of value in approximating the particle characteristics of fugitive dust emission sources such as furnace charging, tapping and leaks, it is presented in this section.

The range of chemical composition of stack emission components in cupola dust has been reported in the literature as shown in Table 2.7-3. Table 2.7-3 indicates that oxides of iron and silicon and combustible materials form a high proportion of cupola dust.

Particle size distribution studies have been performed for stack emissions from cupola furnaces. The data reported in two major studies is shown in Tables 2.7-4 and 2.7-5. There is very little information in the literature on whether or not a relationship exists between particle size distribution and chemical composition of cupola emissions. One source conjectures that a high percentage of less than 5 micron particles is generally observed with substantial percentages of metallic oxides. On the other hand, a high percentage of greater than 4.4 micron particles corresponds to significant amounts of silicon oxides from foundry returns, dirty scrap and combustible materials.[27]

TABLE 2.7-2. PARTICULATE EMISSION CHARACTERISTICS FOR VARIOUS FOUNDRY OPERATIONS[22]

FOUNDRY OPERATION	TYPE	PARTICLE SIZE (μm)
Raw material storage and charge makeup:		
Store metal scrap, coke, limestone, dolomite, fluorspar, silica sand	Coke dust Limestone and sand dust	Fine to coarse 30 to 1,000
Centrifuge or heat metal borings and turnings to remove cutting oil	Oil vapors Smoke Unburned hydrocarbons	.03 to 1 .01 to .4
Weigh charge materials	Coke dust Limestone dust	Fine to coarse 30 to 1,000
Melting:		
Cupola furnace	Fly ash Coke breeze Smoke Metallic oxides Oil Vapors	8 to 20 Fine to coarse .01 to .4 Up to .7 .03 to 1
Electric arc melting	Smoke Metallic oxides Oil vapors	.01 to .4 Up to .7 .03 to 1
Induction furnace	Oil vapors	
Reverberatory (air) furnace	Smoke Oil vapors Metallic oxides Fly ash	.01 to .4 .03 to 1 Up to .7 8 to 20
Furnace charge preheating or drying	Smoke Oil vapors Metallic oxides Metallic oxides	.01 to .4 .03 to 1 75% - 5 to 60 (bottom fired) 0 to 20 (top fired)
Holding furnaces	Iron oxide Oil vapor	Fine to medium .03 to 1
Duplexing furnaces	Oil vapor Metallic oxides	.03 to 1 Up to .7
Inoculation	Metal oxides	Up to .7
Molding, pouring and shakeout:		
Molding	Sand Dust	Coarse

TABLE 2.7-2. CONTINUED

FOUNDRY OPERATION	TYPE	PARTICLE SIZE (μm)
Pouring:		
Gray and ductile iron Malleable	Core gases Facing fumes Metallic oxides Fluoride fumes Magnesium oxide fumes Synthetic binder smoke and fumes	 Fine to medium 0.1 to .4
Shakeout	Sand fines Smoke Dust	50% - 2 to 15 .01 to .4 50% - 2 to 15
Cleaning and finishing:		
Abrasive cleaning	Dust	50% - 2 to 15
Grinding	Metal dust Sand fines Abrasives Wheel bond material Vitrified resins	Above 7 Fine to medium 50% - 2 to 7 Fine 50% - 2 to 15
Annealing and heat treating	Oil vapors	.03 to 1
Sand conditioning:		
New sand storage Sand handling system Screening	Fines Fines Fines	50% - 2 to 15 50% - 2 to 15 50% - 2 to 15
Mixing	Fines Flour Bentonites Sea coal Cellulose	50% - 2 to 15 Fine to medium Fine to medium Fine to medium Fine to medium
Drying and reclamation	Dust Oil vapors	50% - 7 to 15 .03 to 1
Sand storage	Sand fines Flour Binders	Fine 50% - 7 to 15
Core making	Sand fines Dust	Fine to medium Fine to medium
Baking	Vapors Smoke	

TABLE 2.7-3. CHEMICAL COMPOSITION OF CUPOLA DUST[23]

Component	% by Weight	
	Mean Range	Scatter Values
SiO_2	20-40	10-45
CaO	3-6	2-18
Al_2O_3	2-4	0.5-25
MgO	1-3	0.5-5
FeO (Fe_2O_3, FE)	12-16	5-26
MnO	1-2	0.5-9
Ignition Loss (C,S,CO_2)	20-50	10-64

TABLE 2.7-4. PARTICLE SIZE DISTRIBUTION OF DUST EMISSIONS FROM BOTH COLD AND HOT BLAST CUPOLA FURNACE STACKS[24]

Particle Size (μm)	Cumulative Percent by Weight for Indicated Particle Diameter	
	Cold Blast	Hot Blast (acid)[a]
< 1000	90-100	95-100
< 500	80-90	90-100
< 200	60-80	65-95
< 100	40-65	40-80
< 50	20-50	30-60
< 20	10-30	20-40
< 10	5-25	15-35
< 5	2-20	10-30
< 2	up to 15	5-20

[a] Cupola supplied with a preheated air blast and where slag is formed due to acid constituents originating from the furnace lining.

TABLE 2.7-5. SIZE DISTRIBUTION FOR PARTICULATE EMISSIONS FROM EIGHTEEN CUPOLA FURNACE INSTALLATIONS[25]

Particle Size (μm)	Cumulative Percent by Weight for Indicated Particle Diameter
< 2	14
< 5	24
< 10	34
< 20	44
< 50	61
< 100	78
< 200	93

Chemical composition or particulate emissions from electric arc furnaces at three iron foundries has been reported in one literature source and is shown in Table 2.7-6. The main components in these emissions were iron oxide and silicon dioxide, while substantial amounts of oxides of manganese, aluminum and magnesium were found. The emissions consist almost entirely of the oxides of various metals charged, with lesser amounts of furnace refractories and fluxing materials which were used.[28]

TABLE 2.7-6. CHEMICAL ANALYSIS OF PARTICULATE EMISSIONS FROM AN ELECTRIC ARC FURNACE[26]

Constituent	Proportion of Total Particulate, Weight Percent		
	Foundry A	Foundry B	Foundry C
Iron oxide	75-85	75-85	75-85
Silicon dioxide	10	10	10
Magnesium oxide	2	0.8	1
Manganese oxide	2	2	2
Lead oxide	1	2	0.5
Alumina	0.5	1	0.5
Calcium oxide	0.3	0.2	0.8
Zinc oxide	0.2	2	0.3
Copper oxide	0.04	0.03	0.01
Lithium oxide	0.03	0.03	0.03
Tin oxide	0.03	0.3	0.02
Nickel oxide	0.02	0.03	0.01
Chromium oxide	0.02	0.07	0.01
Barium oxide	0.02	0.07	0.01

Particle size distributions of particulate emissions have also been determined for electric arc furnaces at three foundries. These distributions are shown in Table 2.7-7. It is reported that particulate emissions from electric arc furnace melting and refining are quite small in diameter. Table 2.7-7, which indicates that 80 percent of the emissions have a particle diameter smaller than 5 microns, confirms this conclusion. A second literature reference indicates that 90 to 95 percent of the fumes from electric arc furnaces are below 0.5 microns in size.[29] Another literature source reports that 75 percent of the particulates are less than 5 microns in diameter with a mass median diameter between 2.27 and 2.33 μm.[30]

TABLE 2.7-7. PARTICLE-SIZE DISTRIBUTION FOR PARTICULATE EMISSIONS FROM THREE ELECTRIC-ARC-FURNACE INSTALLATIONS[31]

	Cumulative Percent by Weight for Indicated Particle Diameter		
Particle Size (μm)	Foundry A	Foundry B	Foundry C
< 1	5	8	18
< 2	15	54	61
< 5	28	80	84
< 10	41	89	91
< 15	55	93	94
< 20	68	96	96
< 50	98	99	99

The chemical composition and particle size distributions of particulate emissions from both cupolas and electric arc furnaces are highly variable and are dependent on a number of factors. One literature source concludes that the type of cupola emissions are more affected by the quantity and quality of charge materials, and that the nature and cleanliness of the charged materials are the most important factors in determining the type of emission from electric arc furnaces.[32]

2.7.4 Control Methods

Raw material handling, storage and transfer operations as such are not addressed here but are discussed in Section 2.2 for coke and limestone. These operations for the iron and steel scrap are assumed to be low emission sources, and no control is recommended.

Reduction of emissions from melting operations is enhanced when clean scrap is used in the raw charge. Clean materials that are essentially devoid of dirt, oil or grease carry no extraneous burden into and through the furnace. Use of clean scrap, or the pre-cleaning of dirty scrap before use, are useful and appropriate measures worthy of consideration and adjunctive to and supportive of other control measures. However, it has been reported that the pre-cleaning of dirty scrap is not economically feasible.[33]

Charging and tapping emissions from the cupola may be controlled by hooding the charging and tapping areas and venting the system to fabric filters or scrubbers. Another system that may be used is building evacuation and venting to a fabric filter. Proper sizing of the primary control system to maintain continuous draft through the charging door will help alleviate fugitive emissions.[13] Cupolas with above or below charge takeoffs can maintain a strong in-draft through the charge door and eliminate the escape of fugitive emissions.

Typical control devices used for electric arc or electric induction furnaces include a localized, fixed capture hood and a fabric filter or wet scrubber. The design air volume required to ventilate an electric arc furnace with an integral hood is approximately 2,500 cfm per ton of charge.[7,34] This level of ventilation should provide effective capture of charging and tapping emissions.

Newer furnaces can utilize the above system, canopy hoods (roof mounted hoods) or direct shell evacuation.[30] The latter two control measures may not be feasible on older furnaces due to space and design constraints.

Generally, control measures for charging, melting and tapping emissions from reverberatory furnaces have not been required because of their relatively low emission rates.[35] However, collection of charging and tapping emissions, as well as furnace emissions (if no stack discharge) is technically feasible thru the use of localized hooding or building evacuation with exhaust to a fabric filter or electrostatic precipitator. Such control measures may have to be implemented especially for reverberatory furnaces that are or will be using pulverized coal.

Technically feasible methods for capturing fugitive dusts from all furnace operations include building evacuation or local exhaust systems. (See Figures 2.7-10 and 2.7-11 for examples.) Building evacuation to a collection device can control emissions from all sources in a foundry such as casting shakeout, cooling, cleaning and finishing. (One source reports that the use of building evacuation or general dilution ventilation systems without separate primary emission capture is unlikely to provide a sufficient degree of control for airborne contaminants in most foundries to meet OSHA's permissible exposure limits for such contaminants.[33]) On the other hand, local exhaust control systems generally serve specific sources. Because of the large exhaust volumes and attendant high operating and capital costs for total building evacuation systems, the local exhaust methods are usually favored.

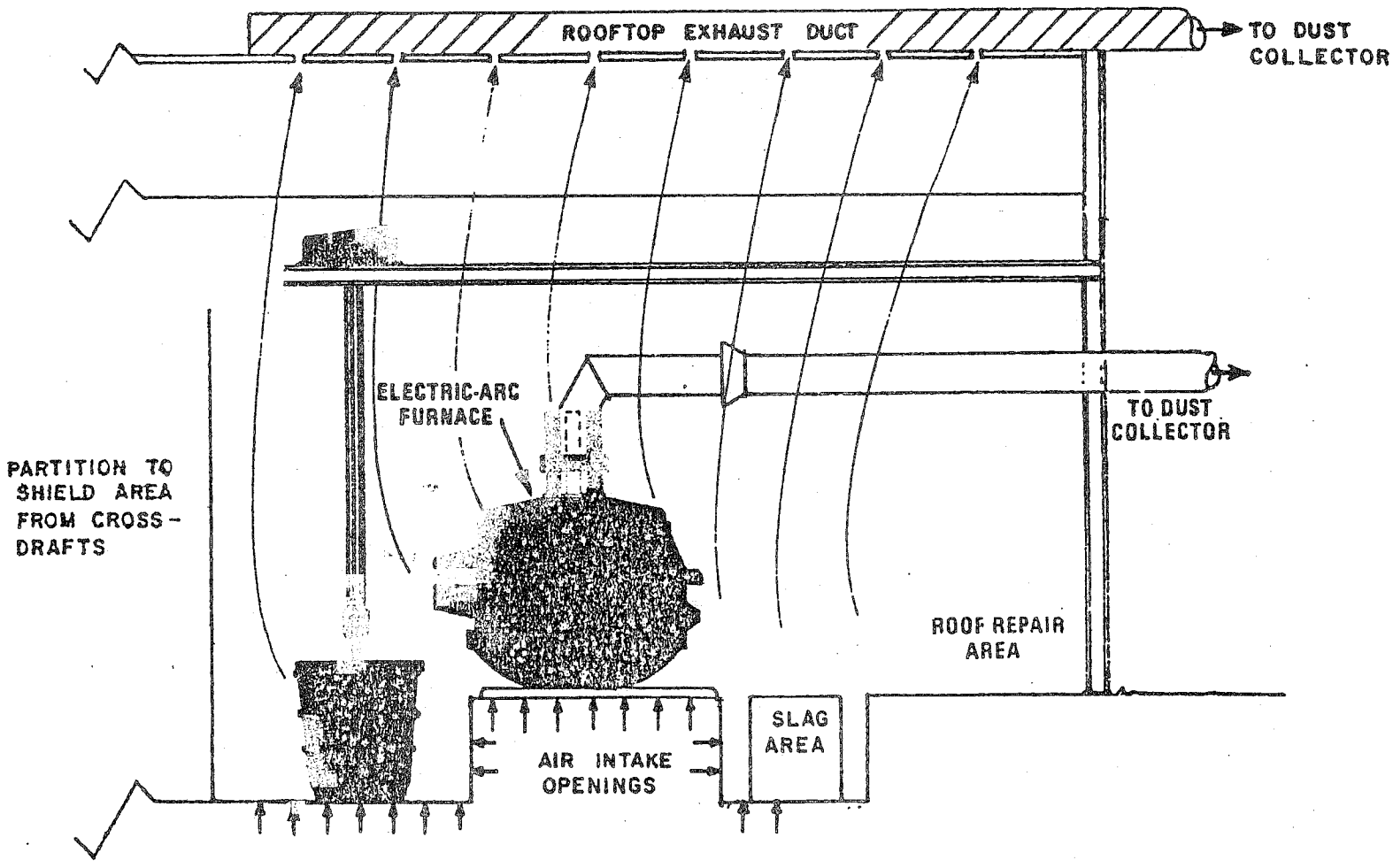

Figure 2.7-10. Building evacuation system.[36]

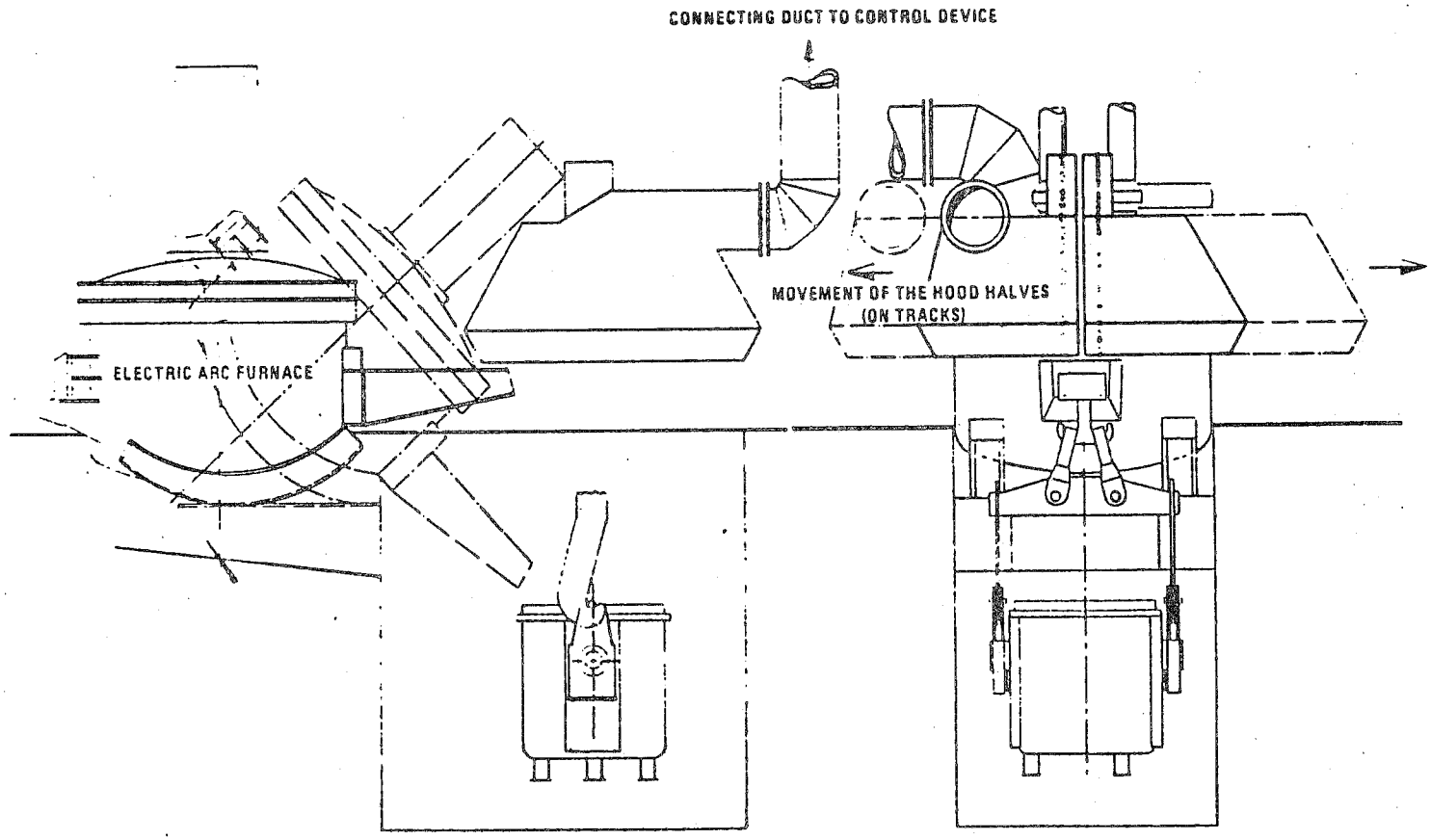

Figure 2.7-11. Mobile tapping hoods.[37]

In recent years, ductile iron inoculation stations have been equipped with collecting hoods or have been installed in enclosed rooms. The evolved gases are exhausted to a dust collection unit. Medium energy wet scrubbers and fabric filters have been used for dust collection.[38]

A side draft hood is often provided for the pouring area, and the mold cooling conveyor between the pouring and shakeout areas is often fully hooded with sheet metal. Also, the use of hooding as illustrated in Figure 2.7-12 is another successful system for capturing emissions from pouring and mold cooling. In this system, air is blown downward from the upper edge of the hood along with the pouring and mold cooling emissions. A variation of this system consists of utilizing an incoming draft from a floor grating rather than from the front edge of the hood. For smaller foundries, a movable pouring hood as shown in Figure 2.7-13 may be effective.[40] In practice, pouring and mold cooling emissions, especially for smaller production and jobbing foundries with non-fixed pouring and cooling locations, are usually exhausted directly to the atmosphere without control.[41] If control measures are deemed necessary, the hoods may be vented to wet scrubbers.

Fugitive dust emissions from the shakeout area are usually collected via a side or bottom draft hood or a partial enclosure. Duct systems from the shakeout usually lead to a single control device, frequently a wet scrubber or fabric filter. Figure 2.7-14 illustrates a shakeout with an enclosure vented to a wet scrubber.

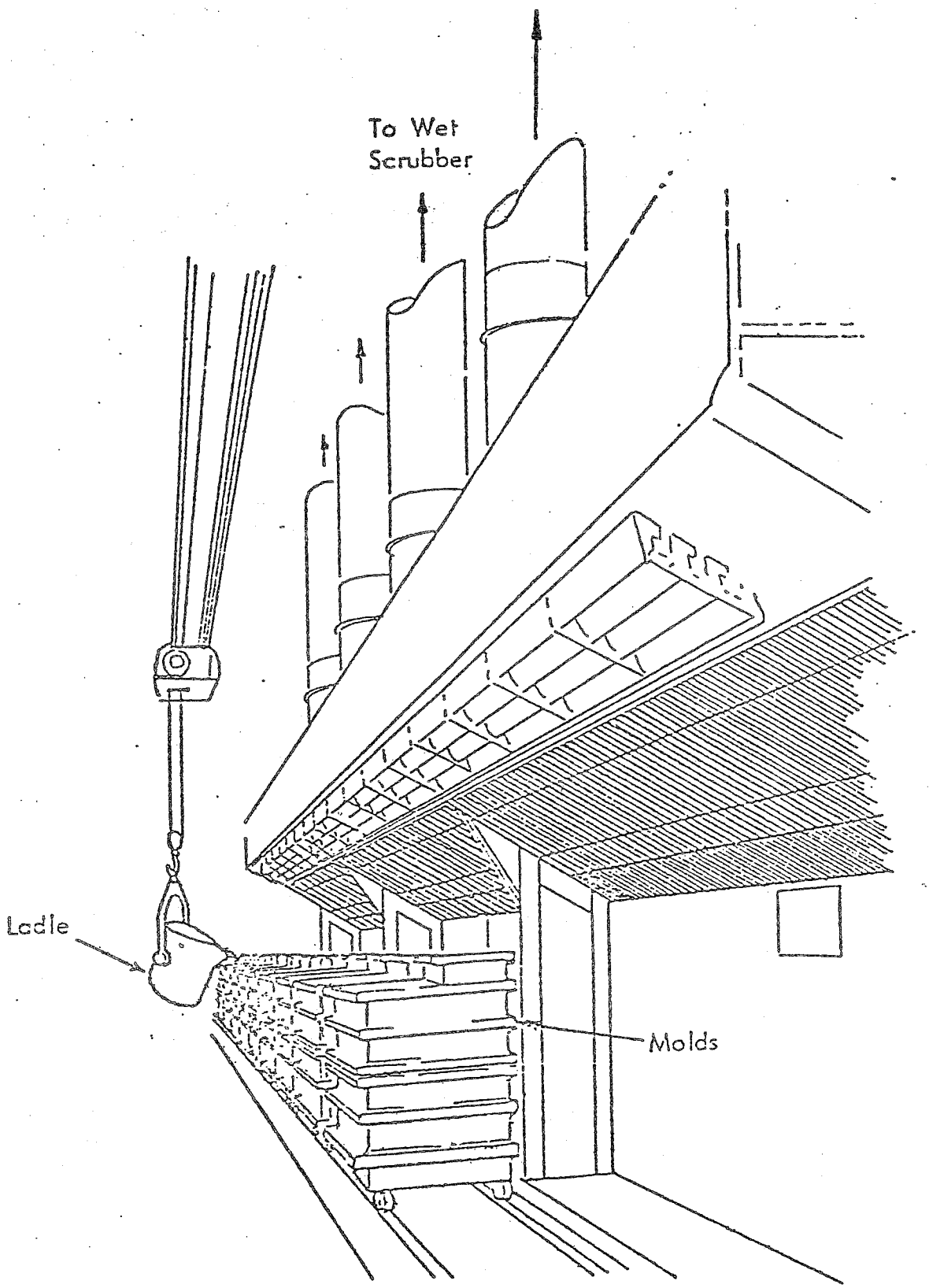

Figure 2.7-12. Hooded pouring station.[39]

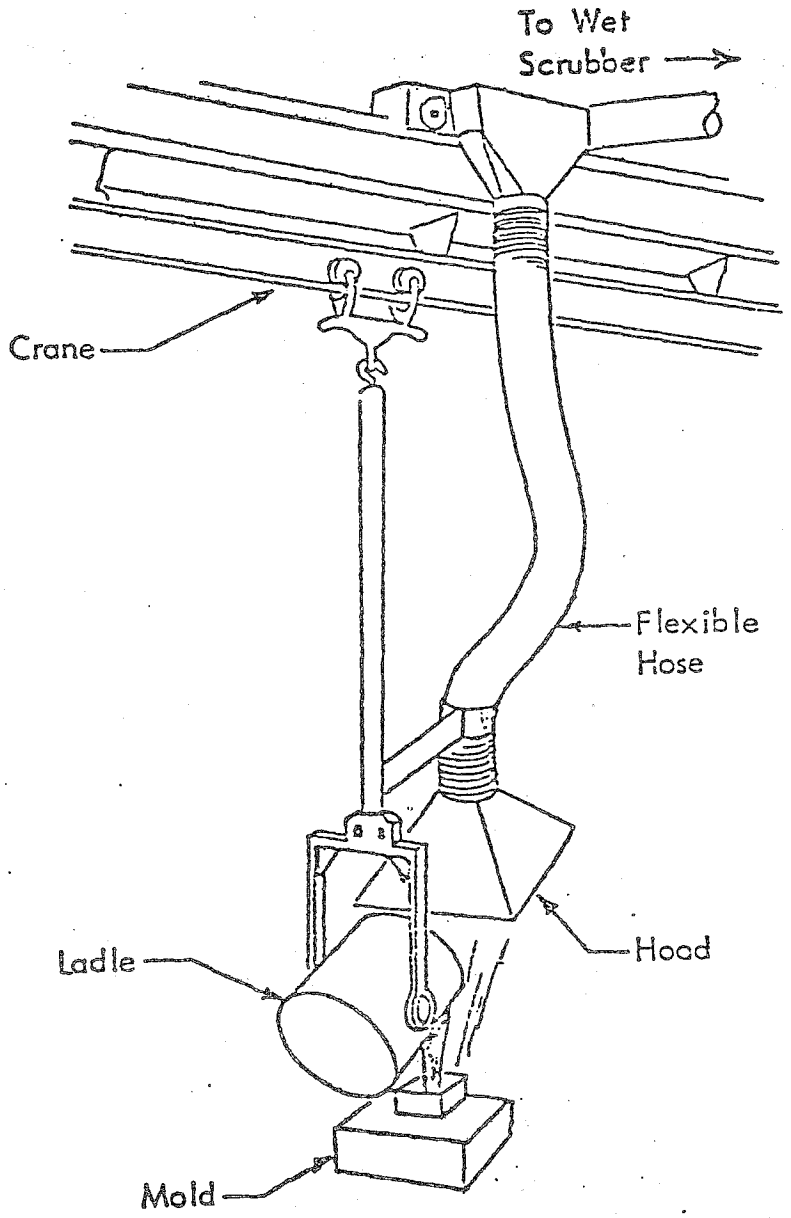

Figure 2.7-13. Movable pouring hood.[42]

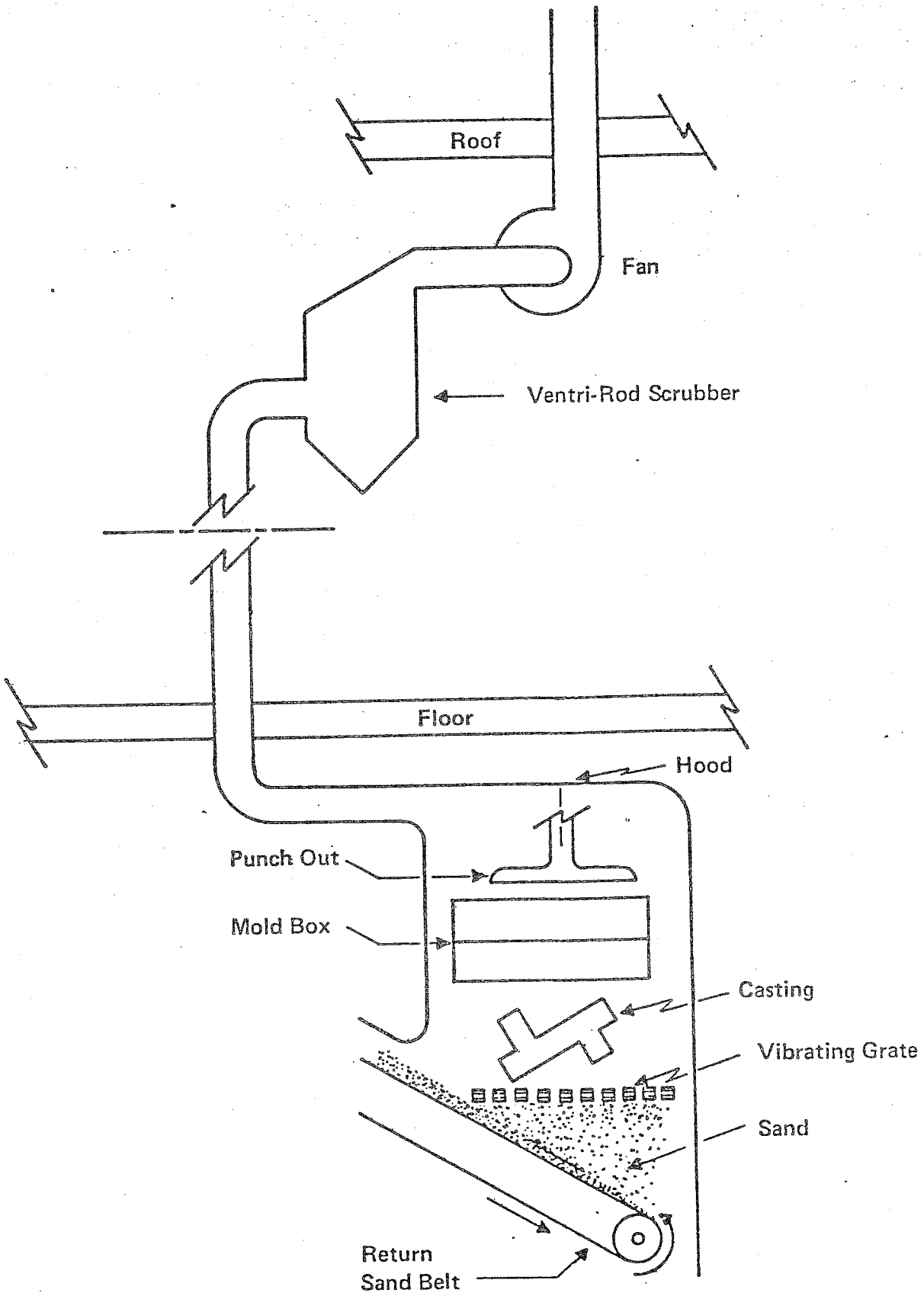

Figure 2.7-14. A casting shakeout control system.[43]

Particulate emissions from cleaning and finishing operations may be captured by local exhaust systems connected to either dry mechanical collectors (i.e., cyclones), fabric filters or wet collectors. Particulate emissions from abrasive shot blasting and tumble cleaners is commonly controlled by fabric filters or medium energy wet collectors. Dry mechanical collectors are also used at abrasive cleaning processes. Grinding operations are normally provided with local exhaust hoods connected to either high efficiency centrifugal collectors (multiple cyclones) or fabric filters.[44]

Coremaking effluents consist primarily of the gases emitted from the cold box, hot box, bake ovens and shell core machines and are usually exhausted to the atmosphere through a ventilation system or are passed through an odor scrubber before venting to the atmosphere.[44] Core ovens, when operated below 400°F and fired with natural gas, do not generally require air pollution control equipment and may be vented directly to the atmosphere. Emissions can be reduced by modifying the composition of the core binders and lowering the baking temperature.[45]

Medium energy wet collectors are best suited for moist sand preparation and handling. When dry sand conditions exist, fabric filters are occasionally used. Often some type of hood is used to capture emissions in sand conveyor systems especially at transfer points. As with many other processes, ductwork and exhaust fans are required in a complete collection system.[44] (Figure 2.7-15 illustrates the capture design on a typical sand-handling system.)

Table 2.7-8 summarizes the available control techniques, their effectiveness, estimated costs and RACM selections.

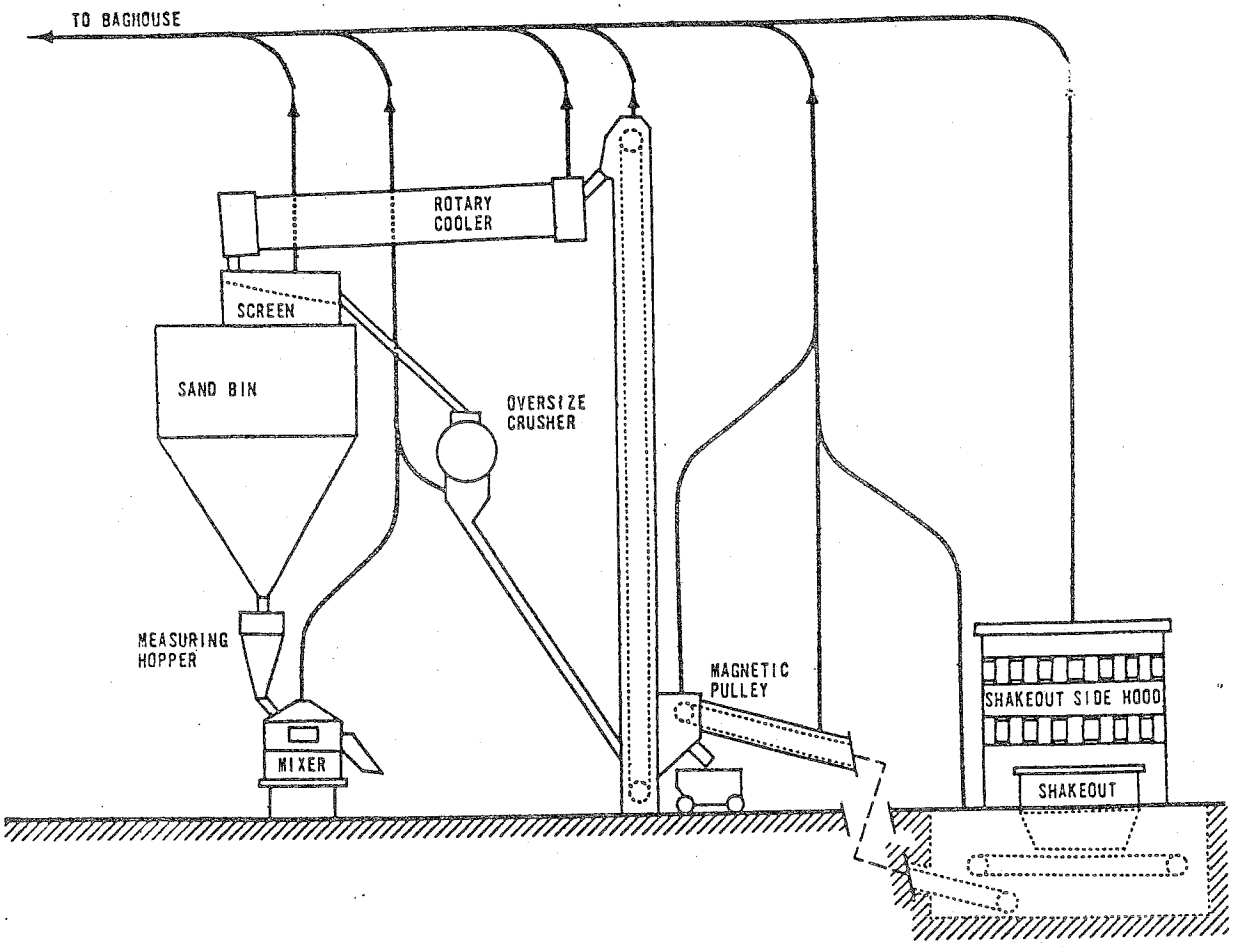

Figure 2.7-15. Capture design for a typical sand-handling system.[46]

2.7.2 Recommended Reasonably Available Control Measures (RACM)

The RACM selections for iron foundry fugitive sources are presented in Table 2.7-3.

The recommended control measure for cupola furnace charging emissions is the maintenance of sufficient draft through the charge door to effectively contain charging emissions and vent them to the existing primary control device. This is the most effective means of control that would not require a large capital outlay for cupolas having above-charge and below-charge take-offs. However, under this control measure, cupola furnace tapping emissions would be uncontrolled.

For control of electric arc and large electric induction furnaces which have primary controls, the selected RACM is maintenance of a continuous draft during the charging and tapping operations through the existing hooding for primary control. This technique could involve some modifications or extensions to the existing hoods to assure good capture. For furnaces which do not have primary controls, RACM consists of localized and canopy hooding which is vented to a fabric filter. For very small electric induction furnaces which have minimal visible emissions, no control is recommended.

No control is recommended for reverberatory furnaces since these are very low emitters of particulate matter and are not usually controlled.

The recommended RACM for ductile iron inoculation is hooding with exhaust to a fabric filter or wet scrubber. This system gives very good control and is commonly applied on existing foundries.

TABLE 2.7-8. A SUMMARY OF THE CONTROL ALTERNATIVES, EFFICIENCIES AND COSTS, AND THE RACM SELECTIONS FOR FUGITIVE DUST EMISSIONS FROM SOURCES AT IRON FOUNDRIES

Fugitive dust sources	Control alternatives	Control efficiency, %	Control costs, Jan. 1980, $		Cost benefit, $/lb	RACM selection
			Capital	Annualized		
(1) Cupola furnace charging and tapping	Hooding, vent to fabric filter	90[a]	336,000[a]	82,000[b]	2.60	Maintenance of continuous draft through charge door (if primary controls present); otherwise hooding, vent to fabric filter
	Building enclosure, evacuation to fabric filter	95[c]	d	d	NA	
	Maintenance of continuous draft through charge door	70[e]	150,000[f]	30,000[g]	1.22	
(2) Electric arc furnace charging and tapping	Hooding, vent to fabric filter	90[a]	336,000[a]	82,000[b]	3.94[r] 1.97[s]	Maintenance of continuous draft during charging and tapping operations (if primary controls present); otherwise hooding, vent to fabric filter
	Building enclosure, evacuation to fabric filter	95[c]	d	d	NA	
	Maintenance of continuous draft during charging and tapping	70[e]	20,000[h]	4,000[g]	0.25[r] 0.12[s]	
(3) Electric induction furnace melting, charging and tapping	Hooding, vent to fabric filter	90[a]	336,000[a]	82,000[b]	1.82	Maintenance of continuous draft during charging and tapping (if primary controls present); otherwise, hooding, vent to fabric filter
	Building enclosure, evacuation to fabric filter	95[c]	d	d	NA	
	Maintenance of continuous draft during charging and tapping	70[e]	20,000[h]	4,000[g]	0.11	
(4) Reverberatory furnace charging and tapping	Hooding, vent to fabric filter or ESP	90[a]	336,000[a]	82,000[b]	27.61	No control
	Building enclosure, evacuation to fabric filter or ESP	95[c]	d	d	NA	
(5) Ductile iron inoculation	Hooding, vent to fabric filter or scrubber	90[a]	153,000[a,i]	33,000[b]	0.28	Hooding, vent to fabric filter or scrubber
	Room enclosure, vent to filter or scrubber	95[c]	d	d	NA	
(6) Pouring molten metal	Hoods, vent to wet scrubber	95[c]	63,000[j]	17,000[b]	0.26	Hoods, vent to scrubber
(7) Casting shakeout	Hoods, vent to wet scrubber or fabric filter	95[c]	234,000[k]	82,000[b]	0.20	Hoods, vent to fabric filter or scrubber

(continued)

TABLE 2.7-8 (continued)

Fugitive dust sources	Control alternatives	Control efficiency,%	Control costs, Jan. 1980, $ Capital	Control costs, Jan. 1980, $ Annualized	Cost benefit, $/lb	RACM selection
(8) Cooling and cleaning castings	Hooding, mechanical collector, fabric filter or scrubber	90[c]	1	1	0.20	m
(9) Finishing castings	Hooding, vent to mechanical collector, fabric filter or scrubber	90-99[a]	1	1	0.20	m
(10) Core and molding sand unloading and storage:						
mechanical handling	Hooding, vent to mechanical collector	80[c]	33,600[c]	12,000[c]	2.14	Wet suppression (chemical)
	Wet suppression (chemical)	85[c]	26,000[h]	7,000[o]	1.18	
	Enclosure	50[c]	15,000[p]	3,000[g]	0.85	
pneumatic handling	Vent storage hopper to fabric filter	99[c]	NA	NA	NA	Vent storage hopper to fabric filter
(11) Core sand and binder mixing	Hooding, vent to mechanical collector or fabric filter	90[c]	1	1	0.20	m
(12) Core making	Hooding, vent to fabric filter	90[c]	1	1	0.20	m
(13) Core baking	Afterburners	90[c]	35,000[q]	21,000[q]	2.59	No control
(14) Mold sand preparation	Hooding, vent to fabric filter or scrubber	90[c]	1	1	0.20	m
(15) Mold makeup	Hooding, vent to fabric filter or scrubber	90[c]	1	1	0.20	m

NA = Not available.

TABLE 2.7-8 (continued)

[a] Reference [47].

[b] Reference [48].

[c] Estimated.

[d] No cost data available.

[e] Based on control of 95% of charging emissions only. Reference [49].

[f] Reference [49].

[g] Includes only capital charges and maintenance estimated at 20% of capital investment.

[h] Estimated costs of movable ducting required.

[i] Assumed equivalent to control tapping emissions.

[j] Reference [50].

[k] Reference [50]. Based on 50,000 acfm and control of sand handling, cooling, cleaning, mixing, core and mold mixing operations.

[l] Control costs included under the casting shakeout system.

[m] RACM is an integrated system ducting the casting shakeout, sand handling, cooling, cleaning, mixing, core and mold making operations to a single fabric filter or wet scrubber.

[n] Reference [51].

[o] Reference [52].

[p] Reference [53]. Based on 20' x 20' x 30' enclosure.

[q] Reference [54].

[r] With no alloying in the ladle.

[s] With alloying in the ladle.

The RACM selected for hot metal pouring operations is hooding and local exhaust to a wet scrubber. This type of system provides very good control (95%).

The selected RACM for control of the casting shakeout fugitive emissions is a system of hoods ducted to a common fabric filter or wet scrubber. This system would be designed to handle exhaust gases from the cleaning and cooling of castings, finishing operations, sand and binder mixing, core and mold makeup, and sand preparation and handling operations. This system is very effective and is used in existing foundries.

The sand unloading operations (truck or railcar dumping into receiving hopper) can be effectively controlled by use of wet suppression. Other options offer inferior control at costs on the same order of magnitude. For the pneumatic unloading and storage of sand, the general industry practice is the use of a fabric filter to control emissions from the storage hopper vent.

No control was selected for the core baking operation since with proper operation this is a relatively minor source of particulate emissions.

REFERENCES FOR SECTION 2.7

1. Compilation of Air Pollutant Emission Factors. U.S. Environmental Protection Agency, Office of Air and Waste Management, Office of Air Quality Planning and Standards. Publication No. AP-42. Research Triangle Park, North Carolina. February 1976. p. 7.10-1.

2. Particulate Pollutant Systems Study, Vol. III. Handbook of Emission Properties. Midwest Research Institute. Prepared for the U.S. Environmental Protection Agency, Air Pollution Control Office. Contract No. CPA 22-69-104. Durham, North Carolina. May 1971.

3. Assessment of Fugitive Particulate Emission Factors for Industrial Processes. PEDCo Environmental, Inc. Prepared for the U.S. Environmental Protection Agency, Office of Air Quality Planning and Standards. Contract No. 68-02-2585. Research Triangle Park, North Carolina. July 1978.

4. Gutow, B.S. An Inventory of Iron Foundry Emission. Modern Casting. January 1972.

5. Air Pollution Aspects of the Iron Foundry Industry. A.T. Kearney Company. Prepared for the U.S. Environmental Protection Agency. PB 204 172. February 1971.

6. Kalika, P.W. Development of Procedures for Measurement of Fugitive Emissions. The Research Corporation of New England. Prepared for the U.S. Environmental Protection Agency. Contract No. 68-02-1815. July 1975.

7. Scott, William D. and Charles E. Bates. Measurement of Iron Foundry Fugitive Emissions. Presented at Symposium on Fugitive Emissions: Measurement and Control. Hartford, Connecticut. May 18, 1976.

8. Personal communication between Thomas J. Kalman, Ohio EPA, and David L. Gallutia, Vice-President, Ohio Cast Metals Federation. January 23, 1981.

9. Fennelly P.F., and P.D. Spawn. Air Pollutant Control Techniques for Electric Arc Furnaces in the Iron and Steel Foundry Industry. GCA/Technology Division. Prepared for the U.S. Environmental Protection Agency, Office of Air and Waste Management, Office of Air Quality Planning and Standards, Research Triangle Park, North Carolina. Contract No. 68-01-4143. EPA-450/2-78-024. June 1978. p. 2-5.

10. Ibid. p. 2-4.

11. Air Pollution Engineering Manual, Second Edition. Danielson, J.A. (ed.). U.S. Environmental Protection Agency. Research Triangle Park, North Carolina. May 1973. p. 236.

12. Systems Analysis of Emissions and Emissions Control in the Iron Foundry Industry. Volume II. A.T. Kearney & Company, Inc. Prepared for the U.S. Environmental Protection Agency, Division of Process Control Engineering, Air Pollution Control Office. Contract No. CPA 22-69-106. February 1971. Exhibit IV-19.

13. Ibid. Exhibit IV-20.

14. Ibid. Exhibit IV-21.

15. Ibid. Exhibit IV-22.

16. Environmental Assessment of Iron Casting. Research Triangle Institute. Prepared for the U.S. Environmental Protection Agency, Industrial Environmental Research Laboratory, Office of Environmental Engineering and Technology, Research Triangle Park, North Carolina. Contract No. 68-02-2630. EPA-600/2-80-021. January 1980. p. 30.

17. Core and Mold Process Control. American Foundrymen's Society, Inc. Des Plaines, Illinois. 1977. pp. 14-27.

18. Op. cit. Reference 12. Exhibit IV-26.

19. Op. cit. Reference 9. p. 2-16.

20. Technical Guidance for Control of Industrial Process Fugitive Particulate Emissions. PEDCo Environmental, Inc. Prepared for the U.S. Environmental Protection Agency, Office of Air and Waste Management, Office of Air Quality Planning and Standards, Research Triangle Park, North Carolina. Contract No. 68-02-1375. EPA-450/3-77-010. March 1977. pp. 2-218, 2-219.

21. Ibid. pp. 2-220 to 2-222.

22. Greenburg, J.H., and R.E. Conover. Report on Systems Analysis of Emissions and Emissions Control in the Iron Foundry Industry in the U.S.A. Modern Casting. March 1971. p. 69.

23. Engels G., and E. Weber. Cupola Emission Control. Gray and Ductile Iron Founders Society, Inc. Cleveland, Ohio. p. 60.

24. Ibid. p. 57.

25. Davis, J.A., et al. Screening Study on Cupolas and Electric Furnaces in Gray Iron Foundries. EPA Contract No. 68-01-0611. Battelle Laboratories. Columbus, Ohio. August 1975. p. III-33.

26. Op. cit. Reference 5. p. 2 of Exhibit IV-6.

27. Ibid. pp. IV-6, IV-7.

28. Op. cit. Reference 12. p. VI-40.

29. Bates, C.D., and L.D. Scneel. Processing Emissions and Occupational Health in the Ferrous Foundry Industry. American Industries Hygiene Association Journal. 35:452-462. August 1974.

30. White, R.L., J.M. Hughes, and N.T. Stephens. Physico-Chemical Properties of Metal Furnace Fume Emissions. Paper Presented at the 69th Annual Meeting of the Air Pollution Control Association. Portland, Oregon. June 27-July 1, 1976.

31. Op. cit. Reference 5. p. 1 of Exhibit IV-6.

32. Op. cit. Reference 12. pp. VI-32, VI-40.

33. Personal communication between Thomas J. Kalman, Ohio EPA, and David L. Gallutia, Vice-President, Ohio Cast Metals Federation. May 28, 1981.

34. Op. cit. Reference 22.

35. Op. cit. Reference 11. p. 269.

36. Op. cit. Reference 9. p. 3-18.

37. Ibid. p. 3-42.

38. Op. cit. Reference 22. p. 67.

39. Op. cit. Reference 16. p. 34.

40. Ibid. pp. 33,34.

41. Op. cit. Reference 12. Volume I. p. VII-67.

42. Op. cit. Reference 16. p. 36.

43. Ibid. p. 61.

44. Op. cit. Reference 22. p. 67.

45. Systems Study for Control of Emissions, Primary Nonferrous Smelting Industry. Arthur G. McKee and Company. Prepared for National Air Pollution Control Administration, Division of Process Control Engineering. Contract PH 86-65-85. June 1969.

46. Op. cit. Reference 11. p. 316.

47. Source Evaluation in Region IV Non-Attainment Areas to Determine TSP Emission Reduction Capabilities. PEDCo Environmental, Inc. Prepared for the U.S. Environmental Protection Agency. Contract No. 68-02-2603, Task No. 2. Research Triangle Park, North Carolina. June 1978. p. 2-7.

48. Industrial Gas Cleaning Institute, Inc. Nonmetallic Minerals Industries Control Equipment Costs. Prepared for the U.S. Environmental Protection Agency, Research Triangle Park, North Carolina. Contract No. 68-02-1473, Task No. 19, February 1977. p. 3-5.

49. Op. cit. Reference 47. p. C-9.

50. Op. cit. Reference 48. p. 3-3.

51. Ibid. p. 4-9.

52. Ibid. p. 4-11.

53. Capital and Operating Costs of Selected Air Pollution Control Systems. GARD, Inc. Prepared for the U.S. Environmental Protection Agency, Office of Air and Waste Management, Office of Air Quality Planning and Standards, Research Triangle Park, North Carolina. EPA-450/3-76-014. May 1976. pp. 4-24 to 4-28.

54. Ibid. pp. 4-9, 4-17, 4-90.

Assume furnace capacity = 11 tph or 33,000 tpy

(1) Cupola furnace charging and tapping
Emissions = (1.05 lb/ton)(33,000 tpy) = 35,000 lbs/yr

Hooding, vent to fabric filter

Capital cost = $336,000
Annual cost = 82,000

$$C/B = \frac{\$82,000/yr}{.9\ (35,000)} = \$2.60/lb$$

Building enclosure evacuation to fabric filter
No data

Maintenance of continuous draft through charge door

Capital cost = $150,000
Annual cost = 30,000

$$C/B = \frac{\$30,000/yr}{.70\ (35,000)} = \$1.22/lb$$

(2) Electric arc furnace charging and tapping
Emissions = (0.7 lb/ton)(33,000 tpy) = 23,100 lbs/yr (no alloying in ladle); (1.4 lbs/ton)(33,000 tpy) = 46,200 lbs/yr (with alloying in ladle)

Hooding, vent to fabric filter

Capital cost = $336,000
Annual cost = 82,000

$$C/B = \frac{\$82,000/yr}{.9\ (23,100)} = \$3.94/lb$$

$$C/B = \frac{\$82,000/yr}{.9\ (46,200)} = \$1.97/lb$$

Building enclosure, evacuation to fabric filter
No data

Maintenance of continuous draft during charging and tapping

Capital cost = $20,000
Annual cost = 4,000

$$C/B = \frac{\$4,000/yr}{.7\ (23,100)} = \$0.25/lb$$

$$C/B = \frac{\$4,000/yr}{.7\ (46,200)} = \$0.12/lb$$

(3) Electric induction furnace melting, charging and tapping
Emissions = (1.5 lb/ton)(33,000 tpy) = 50,000 lbs/yr

Hooding, vent to fabric filter

Capital cost = $336,000
Annual cost = 82,000

$$C/B = \frac{\$82,000/yr}{.9\ (50,000)} = \$1.82/lb$$

Building enclosure, evacuation to fabric filter
No data

Maintenance of continuous draft during charging and tapping

Capital cost = $20,000
Annual cost = 4,000

$$C/B = \frac{\$4,000/yr}{.7\ (50,000)} = \$0.11/lb$$

(4) Reverberatory furnace charging and tapping
Emissions = (0.1 lb/ton)(33,000 tpy) = 3,300 lbs/yr

Hooding, vent to fabric filter or ESP

Capital cost = $336,00
Annual cost = 82,000

$$C/B = \frac{\$82,000/yr}{.9\ (3,000)} = \$27.61$$

Building enclosure, evacuation to fabric or ESP
No data

(5) Ductile iron inoculation
Emissions = (3.9 lbs/ton)(33,000 tpy) = 129,000 lbs/yr

Hooding, vent to fabric filter or scrubber

Capital cost = $153,000
Annual cost = 33,000

$$C/B = \frac{\$33,000/yr}{0.9\ (129,000)} = \$0.28/lb$$

Room enclosure, vent to filter or scrubber
No data

(6) Pouring molten metal
Emissions = (2.115 lb/ton)(33,000 tpy) = 70,000 lbs/yr

Hoods, vent to wet scrubber

Capital cost = $63,000
Annual cost = 17,000

$$C/B = \frac{\$17,000/yr}{.95\ (70,000)} = \$0.26/lb$$

(7) Casting shakeout
Emissions = (7.0 lb/ton)(33,000) = 231,000 lbs/yr

Hoods, vent to wet scrubber or fabric filter

Capital cost = $234,000
Annual cost = 82,000

$$C/B = \frac{\$82,000/yr}{.95\ (231,000) + .9\ (16,000) + .95\ (330) + .9\ (148,500) + .9\ (1,000) + .9\ (43,000) + .9\ (1,300)}$$

$$= \$\ 0.20/lb$$

(8) Cooling and cleaning castings
Emissions = (0.48 lb/ton)(33,000 tpy) = 16,000 lbs/yr

Hooding, mechanical collector, fabric filter or scrubber

See (7)
C/B = $0.20/lb

(9) Finishing casting
Emissions = (0.01 lb/ton)(33,000 tpy) = 330 lbs/yr

Hooding, vent to mechanical collector, fabric filter or scrubber

See (7)
C/B = $0.20/lb

(10) Core and molding sand unloading and storage

Mechanical handling

Emissions = (.03 lb/ton)(33,000 tpy)(15)(.5) = 7,000 lbs/yr

Hooding, vent to mechanical collector

Capital cost = $33,600
Annual cost = 12,000

$$C/B = \frac{\$12,000/yr}{.8\ (7,000)} = \$2.14/lb$$

Wet suppression (chemical)

Capital cost = $26,000
Annual cost = 7,000

$$C/B = \frac{\$7,000/yr}{.85\ (7,000)} = \$1.18/lb$$

Enclosure

Capital cost = $15,000
Annual cost = 3,000

$$C/B = \frac{\$3,000/yr}{.5\ (7,000)} = \$0.85/lb$$

Pneumatic handling

Emissions = NA

Vent Storage hopper to fabric filter

No data

(11) Core sand and binder mixing

Emissions = (4.5 lb/ton)(33,000 tpy) = 148,500 lbs/yr

Hooding, vent to mechanical collector or fabric filter

See (7)

C/B = $0.20/lb

(12) Core making

Emissions = (0.35 lb/ton cores)(3,300 tpy) = ∿1,000 lbs/yr

Hooding, vent to fabric filter

See (7)

C/B = $0.20/lb

(13) Core baking
Emissions = (2.7 lb/ton core)(3,300 tpy) = 9,000 lbs/yr

Afterburners

Capital cost = $35,000
Annual cost = 21,000

$$C/B = \frac{\$21,000/yr}{.9\ (9,000)} = \$2.59/lb$$

(14) Mold sand preparation
Emissions = (1.3 lb/ton)(33,000 tpy) = 43,000 lbs/yr

Hooding, vent to fabric filter or scrubber

See (7)
C/B = $0.20/lb

(15) Mold makeup
Emissions = (0.04 lb/ton)(33,000 tpy) = 1,300 lbs/yr

Hooding, vent to fabric filter or scrubber

See (7)
C/B = $0.20/lb

2.8 STEEL FOUNDRIES

2.8.1 Process Description

Most steel foundries are operated independently from any integrated iron and steel mill. They produce low carbon content (1 percent or less) steel castings for use within the foundry to produce another product or by manufacturers of heavy equipment.

Several types of furnaces are used to melt the raw materials used to produce these steel castings: direct electric arc, electric induction, open hearth and crucible. The crucible furnace is not in widespread use. (See Sections 2.2.3 and 2.7 for illustrations of some of those types of furnaces.)

Figure 2.8-1 illustrates the process flow for a typical steel foundry operation. The melting furnace is charged through a door or opening with raw materials such as steel scrap, pig iron, ferroalloys and limestone. These materials melt as the furnace temperature is increased. When the temperature reaches about 3000°F, the furnace is tapped and molten metal flows to a holding ladle. The molten metal is transferred from the holding ladle to a pouring ladle and is then poured into prepared molds. The molten steel sets to form castings which are then shaken out of the mold and allowed to cool further. The castings are usually cleaned by shot blasting, and excess metal and surface defects are removed by localized melting and grinding. Finishing operations may include heat treatment in a soaking pit or furnace and surface painting.

Production of molds and cores is an integral part of the steel foundry operation. A mold is usually made of silica sand (although zircon and olivine sand are also used) mixed with water and binders such as clay, pitch or cereal. The mixture is transferred to a molding area, where it is either mechanically or hand packed into a flask.

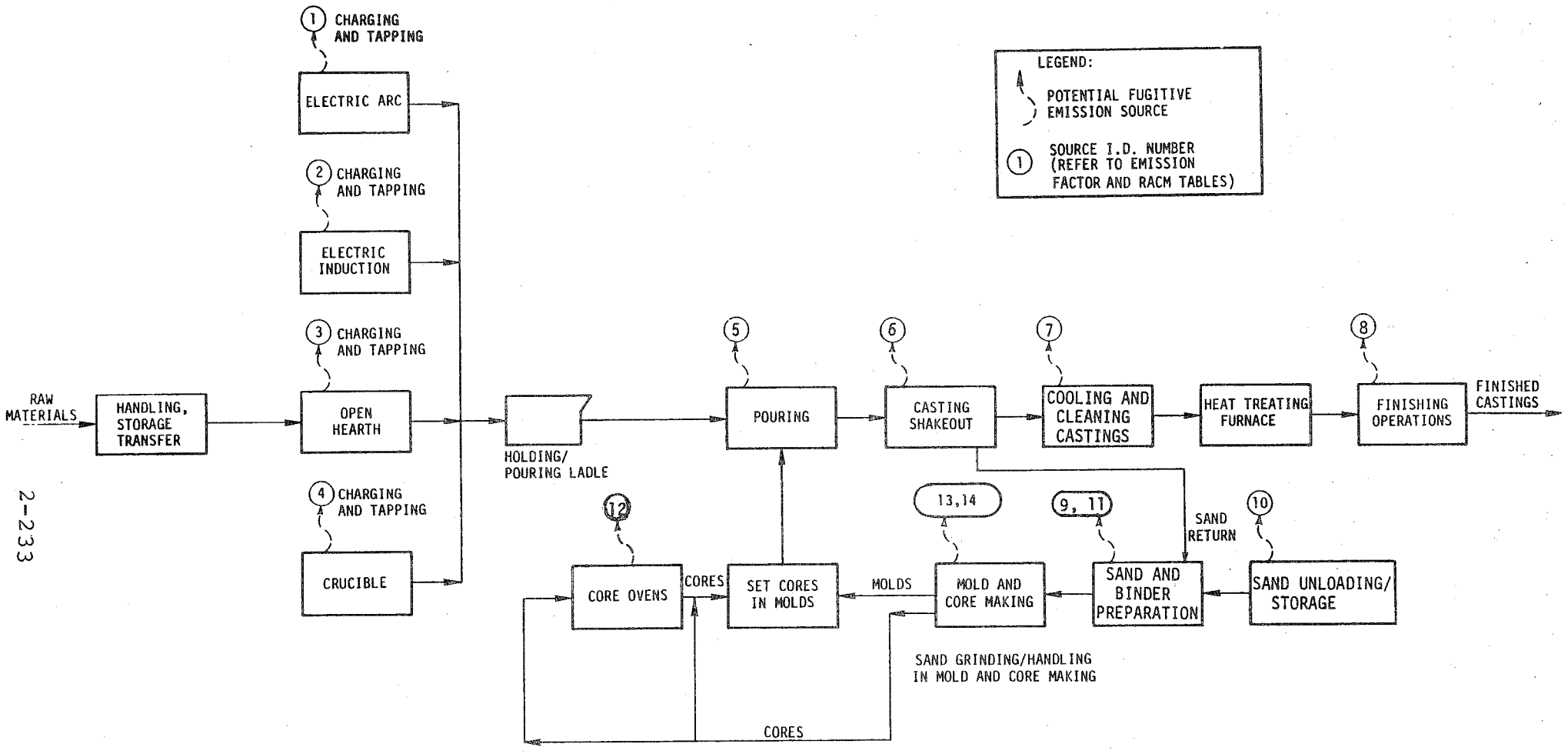

Figure 2.8-1. Simplified process flow diagram for steel foundries and associated fugitive particulate emission sources.

A core is a separate part of the mold that provides a cavity in the castings. Cores are usually made of sand and binders and are usually, but not always, bound to the mold with core paste. The core must be strong enough to withstand the temperature and pressure of the molten metal within the mold. Silicate, resin, oil and cereal binders are used to provide this strength. After the cores are formed, they may be baked in ovens or cured by carbon dioxide, air, a tertiary amine catalyst (Isocure process) or by using heated core boxes (shell and hotbox processes).

The potential fugitive emission sources associated with steel foundries are raw material handling, storage, and transfer operations, charging and tapping of the melting furnaces, pouring into molds, casting shakeout, cleaning operations, finishing operations, sand preparation, and mold and core making.

Large steel foundries operate continuously, 24 hours a day, 7 days a week, while smaller foundries operate only 8 hours a day. The capacity of a foundry depends upon the number and size of furnaces, but typically ranges from 25 to 240 tons of steel produced per day.

2.8.2 Fugitive Dust Emission Factors

The estimated emission factors for steel foundry fugitive particulate sources are summarized in Table 2.8-1. There is practically no data availabl on fugitive emission rates from steel foundries; and, therefore, it is suggested that emission factors for iron foundries (Section 2.7) be used for steel foundries. These are also included in Table 2.8-1 for informational purposes.

It should be noted that use of the iron foundry emission factors for mold sand preparation, core sand and binder mixing and mold making may not be directly applicable to such operations at steel foundries due to differenc in yields and possibly in sand to metal ratios between steel and iron casting production. Such differences should be evaluated and, if necessary, adjustme made to such emission factors to reflect any differences.

TABLE 2.8-1. FUGITIVE DUST EMISSION FACTORS FOR STEEL FOUNDRIES[a]

Source	Emission factor	Reliability rating	References
(1) Electric arc furnace charging and tapping	1.05 to 3.48 lb/ton steel	E	1,2
(2) Electric induction furnace melting, charging and tapping	0.1 lb/ton metal charged	E	3
(3) Open hearth furnace charging and tapping	0.1 to 0.9 lb/ton metal charged	E	4,5
(4) Crucible furnace charging and tapping	0.1 to 0.6 lb/ton metal	E	6
(5) Hot metal pouring	0.55 to 4.13 lb/ton metal	D	7,8
(6) Shakeout of castings[b]	1.2 to 12.8 lb/ton steel	E	1,9
(7) Cooling and cleaning castings[b]	0.16 to 0.8 lb/ton castings	E	9
(8) Finishing castings[b]	0.01 lb/ton castings	E	9
(9) Mold sand preparation[b]	1.3 lb/ton castings	E	1
(10) Core and mold sand unloading and storage:			
mechanical handling	0.03 lb/ton sand unloaded[c]	E	6
pneumatic handling	NA		
(11) Mixing of core sand and binder[b]	0.3 lb/ton sand, or 0.75 to 8.24 lb/ton	E E	10 1,9
(12) Core baking	0.03 to 5.4 lb/ton cores baked	E	6,9,10
(13) Core making[b]	0.35 lb/ton cores	E	10
(14) Mold making[b]	0.04 lb/ton castings	E	9

NA = Not available.

[a] Where ranges are given, use average unless more accurate data is available.

[b] Emission factor given is for iron foundries.

[c] Sand unloading emission factor is assumed to be equivalent to the taconite pellets unloading emission factor as presented in Section 2.1.3. Fugitive dust emissions from storage are estimated to be negligible since sand is normally stored indoors.

2.8.3 Particle Characterization

Data on particle characteristics specific for steel foundries were not found in the literature. Data were available for iron foundries. The available data are presented similar for steel foundries. The available data are presented in Section 2.7.3.

2.8.4 Control Methods

Control techniques available for steel foundries are essentially the same as those for iron foundries. Section 2.7.4 presents a discussion of available control options.

Available control techniques, their effectiveness, estimated costs and RACM selections are listed in Table 2.8-2. Where data were unavailable, it was assumed that control characteristics would be the same as those for control of iron foundries (See Section 2.7.4).

2.8.5 Recommended Reasonably Available Control Measures (RACM)

The RACM selections for steel foundry fugitive sources are presented in Table 2.8-2. It is noted that the reduction of emission from melting operations is enhanced when clean scrap is used in the raw charge. Clean materials that are essentially devoid of dirt, oil or grease carry no extraneous burden into and through the furnace. Use of clean scrap, or the pre-cleaning of dirty scrap before use, are useful and appropriate measures worthy of consideration as adjunctive to and supportive of other control measures.

TABLE 2.8-2. A SUMMARY OF THE CONTROL ALTERNATIVES, EFFICIENCIES AND COSTS, AND THE RACM SELECTIONS FOR FUGITIVE DUST EMISSIONS FROM SOURCES AT STEEL FOUNDRIES

Fugitive dust sources	Control alternatives	Control efficiency, %	Control cost, Jan. 1980, $ Capital	Control cost, Jan. 1980, $ Annualized	Cost benefit, $/lb	RACM selection
(1) Electric arc furnace charging and tapping	Hooding, vent to fabric filter	90[a]	336,000[a]	82,000[b]	1.09	Maintenance of continuous draft during charging and tapping operations (if primary controls present); otherwise hooding, vent to fabric filter
	Building enclosure, evacuation to fabric filter	95[c]	d	d	d	
	Maintenance of continuous draft during charging and tapping	70[e]	20,000[h]	4,000[g]	0.07	
(2) Electric induction furnace, charging and tapping	Hooding, vent to fabric filter	90[a]	336,000[a]	82,000[b]	23.11	Maintenance of continuous draft during charging and tapping (if primary controls present); otherwise, no control
	Building enclosure, evacuation to fabric filter	95[c]	d	d	d	
	Maintenance of continuous draft during charging and tapping	70[e]	20,000[f]	4,000[g]	1.45	
(3) Open hearth furnace charging and tapping	Hooding, vent to fabric filter	90[a]	336,000[a]	82,000[b]	4.62	Maintenance of continuous draft during charging and tapping operations (if primary controls present); otherwise hooding, vent to fabric filter
	Building enclosure, evacuation to fabric filter	95[c]	d	d	d	
	Maintenance of continuous draft during charging and tapping	70[e]	20,000[f]	4,000[g]	0.29	
(4) Crucible furnace charging and tapping	Hooding, vent to fabric filter	90[a]	336,000[a]	82,000[b]	8.32	No control
	Building enclosure, evacuation to fabric filter	95[c]	d	d	d	
	Maintenance of continuous draft during charging and tapping	70[e]	20,000[f]	4,000[g]	0.52	

(continued)

TABLE 2.8-2 (continued)

Fugitive dust sources	Control alternatives	Control efficiency, %	Control cost, Jan. 1980, $ Capital	Control cost, Jan. 1980, $ Annualized	Cost benefit, $/lb	RACM selection
(5) Hot metal pouring	Hoods, vent to wet scrubber or fabric filter	95[c]	63,000[h]	18,000[b]	0.22	Hoods, vent to fabric filter
(6) Casting shakeout	Hoods, vent to wet scrubber or fabric filter	95[c]	234,000[i]	82,000[b]	0.18	Hoods, vent to fabric filter
(7) Cooling and cleaning castings	Hooding, mechanical collector, fabric filter or scrubber	90[c]	j	j	j	k
(8) Finishing castings	Hooding, vent to mechanical collector, fabric filter or scrubber	90-99[a]	j	j	j	k
(9) Mold sand preparation	Hooding, vent to fabric filter or scrubber	90[c]	j	j	j	k
(10) Core and mold sand unloading and storage:						
mechanical handling	Wet suppression (chemical)	85[c]	26,000	7,000	1.00	Wet suppression (chemical)
	Enclosure	50[c]	15,000	3,000	0.73	
	Hooding, vent to mechanical collectors	80[c]	33,600	12,000	1.83	
pneumatic handling	Vent to storage hopper to fabric filter	99[c]	NA	NA	NA	Vent to storage hopper to fabric filter
(11) Core sand and binder mixing	Hooding, vent to mechanical collector or fabric filter	90[c]	j	j	j	k
(12) Core baking	Afterburners	90[c]	35,000	21,000	2.37	No control
(13) Core making	Hooding, vent to fabric filter	90[c]	j	j	j	k
(14) Mold makeup	Hooding, vent to fabric filter or scrubber	90[c]	j	j	j	k

[a] Reference 11.

[b] Reference 12.

[c] Estimated.

[d] No cost data available.

[e] Based on control of 95% of charging emissions only. Reference 13.

[f] Estimated costs of movable ducting required.

[g] Includes only capital charges and maintenance estimated as 20% of capital investment.

[h] Reference 14.

[i] Reference 14. Based on 50,000 acfm and control of sand handling, cooling, cleaning, mixing, screening, core and mold making operations.

[j] Control costs included under casting shakeout system.

[k] RACM is an integrated system ducting the casting shakeout, sand handling, cooling, cleaning, mixing, screening, core and mold making operations to a single fabric filter.

The selected RACM for control of electric arc, electric induction and open hearth furnaces is predicated upon utilization of an existing capture and control system to effect emission control at charging and tapping operations. The RACM technique may necessitate modification of the existing hood(s) and duct system(s) and may require the addition of control device capacity. For electric arc and open hearth furnaces with no primary controls, RACM consists of localized and canopy hooding vented to a fabric filter. For electric induction furnaces with no primary controls, RACM is no control.

No control is recommended for crucible furnaces since these are fairly low emitters of particulate matter, are not usually controlled, and are being phased out of the industry.

The RACM selected for hot metal pouring operations is hooding and local exhaust to a fabric filter. This type of system gives an estimated 95 percent control and has typically been employed at foundries.

The selected RACM for control of the casting shakeout fugitive emission is a local exhaust system comprised of hood(s), ductwork and a fabric filter. Combination systems can be designed to handle exhaust gases from the cleaning and cooling castings, finishing operations, sand and binder mixing, core and mold make up, sand preparation and handling operations. Such systems are very effective and are used in existing foundries.

For illustrations of some of the above control methods, see Section 2.7.

REFERENCES FOR SECTION 2.8

1. Gutow, B.S. An Inventory of Iron Foundry Emission. Modern Casting. January 1972.

2. Air Pollution Aspects of the Iron Foundry Industry. A.T. Kearney Company. Prepared for U.S. Environmental Protection Agency. PB 204 172. February 1971.

3. A Method for Characterization and Quantification of Fugitive Lead Emissions from Secondary Lead Smelters, Ferroalloy Plants, and Gray Iron Foundries. PEDCo Environmental, Inc. Prepared for U.S. Environmental Protection Agency, Monitoring and Data Analysis Division, Contract No. 68-02-2515. Research Triangle Park, North Carolina. January 1978.

4. Compilation of Air Pollutant Emission Factors. U.S. Environmental Protection Agency, Office of Air and Waste Management, Office of Air Quality Planning and Standards. Publication No. AP-42. Research Triangle Park, North Carolina. February 1976.

5. Iversen, R.E. Meeting with U.S. Environmental Protection Agency with AISI on Steel Facility Emission Factors, April 14 and 15, 1976. U.S. Environmental Protection Agency Memorandum. June 7, 1976.

6. PEDCo Environmental, Inc. Technical Guidance for Control of Industrial Process Fugitive Particulate Emissions. Report No. EPA-450/3-77-010. Research Triangle Park, North Carolina. March 1977.

7. A Study of Fugitive Emissions from Metallurgical Processes. Midwest Research Institute. Kansas City. Report No. 5. November 1975.

8. A Study of Fugitive Emissions from Metallurgical Processes. Midwest Research Institute. Kansas City. Report No. 11. May 1976.

9. Scott, William D. and Charles E. Bates. Measurement of Iron Foundry Fugitive Emissions. Presented at Symposium on Fugitive Emissions: Measurement and Control. Hartford, Connecticut. May 18, 1976.

10. Particulate Pollutant Systems Study, Vol. III. Handbook of Emission Properties. Midwest Research Institute. Prepared for the U.S. Environmental Protection Agency, Air Pollution Control Office. Contract No. CPA 22-69-104. Durham, North Carolina. May 1971.

11. PEDCo Environmental, Inc. Source Evaluation in Region IV Non-Attainment Areas to Determine TSP Emission Reduction Capabilities. Prepared for U.S. Environmental Protection Agency. Contract No. 68-02-2603, Task No. 2. Research Triangle Park, North Carolina. June 1978. p. 2-7.

12. Industrial Gas Cleaning Institute, Inc. Nonmetallic Minerals Industries Control Equipment Costs. Prepared for U.S. Environmental Protection Agency, Research Triangle Park, North Carolina. Contract No. 68-02-1473, Task No. 19, February 1977.

13. Op. cit. Reference 11. p. C-9.

14. Op. cit. Reference 12. p. 3-3.

APPENDIX FOR SECTION 2.8

Assume 100 tpd steel production, 93% yield and 108 tpd input

(1) Electric arc furnace
Emissions = (2.3 lb/ton)(100 tpd)(365 d/y)
= 83,950 lbs/yr

Hooding, vent to fabric filter

$$\text{Capital cost} = \$275{,}000 \frac{(249.6)}{(204.1)} = \$336{,}000$$

$$\text{Annual cost} = \$67{,}100 \frac{(249.6)}{(204.1)} = \$82{,}000$$

$$C/B = \frac{\$82{,}000/\text{yr}}{.9\ (83{,}950)} = \$1.09/\text{lb}$$

Building enclosure, evacuation to fabric filter
No data

Maintenance of continuous draft during charging and tapping

$$\text{Capital cost} = \$16{,}800 \frac{(249.6)}{(204.1)} = \$20{,}000$$

Annual cost = $4,000

$$C/B = \frac{\$4{,}000/\text{yr}}{.7\ (83{,}950)} = \$0.07/\text{lb}$$

(2) Electric induction furnace, charging and tapping
Emissions = (0.1 lb/ton)(108)(365) = 3,942 lbs/yr

Hooding, vent to fabric filter

See (1)

$$C/B = \frac{\$82{,}000/\text{yr}}{.9\ (3{,}942)} \quad \$23.11/\text{lb}$$

Building enclosure, evacuation to fabric filter
No data

Maintenance of continuous draft during charging and tapping

See (1)

$$C/B = \frac{\$4{,}000/\text{yr}}{.7\ (3{,}942)} = \$1.45/\text{lb}$$

(3) Open hearth furnace charging and tapping
Emissions = (0.5 lb/ton)(108)(365) = 19,719 lbs/yr

Hooding, vent to fabric filter

See (1)

$$C/B = \frac{\$82,000/yr}{.9\ (19,710)} = \$4.62/lb$$

Building enclosure, evacuation to fabric filter
No data

Maintenance of continuous draft during charging and tapping

See (1)

$$C/B = \frac{\$4,000/yr}{.7\ (19,710)} = \$0.29/lb$$

(4) Crucible furnace charging and tapping
Emissions = (0.3 lb/ton)(100)(365) = 10,950 lbs/yr

Hooding, vent to fabric filter

See (1)

$$C/B = \frac{\$82,000/yr}{.9\ (10,950)} = \$8.32/lb$$

Building enclosure, evacuation to fabric filter
No data

Maintenance of continuous draft during charging and tapping

See (1)

$$C/B = \frac{\$4,000/yr}{.7\ (10,950)} = \$0.52/lb$$

(5) Hot metal pouring
Emissions = (2.34 lbs/ton)(36,500 tpy) = 85,410 lbs/yr

Hoods, vent to wet scrubber or fabric filter

$$\text{Capital cost} = 51,500 \left(\frac{249.6}{204.1}\right) = \$63,000$$

$$\text{Annual cost} = 15,000 \left(\frac{249.6}{204.1}\right) = \$18,000$$

$$C/B = \frac{\$18,000/yr}{.95\ (85,410)} = \$0.22/lb$$

(6) Casting shakeout
Emissions = (7.0 lbs/ton) x (100)(365) = 255,500 lbs/yr

Hoods, vent to wet scrubber or fabric filter (Includes control of source #'s 7 , 8 , 9 , 11 , 13 , 14)

$$\text{Capital cost} = 190{,}000 \left(\frac{249.6}{204.1}\right) = \$234{,}000$$

$$\text{Annual cost} = 67{,}000 \left(\frac{249.6}{204.1}\right) = \$82{,}000$$

$$C/B = \frac{\$82{,}000/yr}{.95(255{,}500) + 0.9(17{,}520) + .95(365) + .9(47{,}450) + .9(164{,}250) + .9(1{,}278) + .9(1{,}460)} = \$0.18/lb$$

(7) Cooling and cleaning castings
Emission = (0.48 lb/ton)(36,500 tpy) = 17,520 lbs/yr

Hooding, mechanical collector, fabric filter or scrubber

See (7)
C/B = $0.18/lb

(8) Finishing castings
Emissions = (0.01 lb/ton)(36,500 tpy) = 365 lbs/yr

Hooding, vent to mechanical collector, fabric filter or scrubber

See (7)
C/B = $0.18/lb

(9) Mold sand preparation
Emissions = (1.3 lbs/ton)(36,500 tpy) = 47,450 lbs/yr

Hooding, vent to fabric filter or scrubber

See (7)
C/B = $0.18/lb

(10) Core and mold sand unloading and storage

Mechanical handling
Emissions = (0.03 lb/ton)(36,500 tpy)(15)(.5) = 8,213 lbs/yr

Hooding, vent to mechanical collectors

Capital cost = $33,600
Annual cost = 12,000

$$C/B = \frac{\$12{,}000/yr}{.8\ (8{,}213)} = \$1.83/lb$$

Wet suppression (chemical)

Capital cost = $26,000
Annual cost = 7,000

$$C/B = \frac{\$7,000/yr}{.85\ (8,213)} = \$1.00/lb$$

Enclosure

Capital cost = $15,000
Annual cost = $3,000

$$C/B = \frac{\$3,000/yr}{.5\ (8,213)} = \$0.73/lb$$

Pneumatic handling
Emissions = NA

Vent storage hopper to fabric filter
No data

(11) Core sand and binder mixing
Emissions = (4.5 lbs/ton)(36,500 tpy) = 164,250 lbs/yr

Hooding, vent to mechanical collector or fabric filter

See (7)
C/B = $0.18/lb

(12) Core baking
Emissions = (2.7 lbs/ton)(0.1)(36,500 tpy) = 9,855 lbs/yr

Afterburners

Capital cost = $35,000
Annual cost = $21,000

$$C/B = \frac{\$21,000/yr}{.9\ (9,855)} = \$2.37/lb$$

(13) Core making
Emissions = (.35 lb/ton cores)(.1)(36,500 tpy) = 1,278 lbs/yr

Hooding, vent to fabric filter

See (7)
C/B = $0.18/lb

(14) Mold makeup
Emissions = (0.04 lb/ton)(36,500 tpy) = 1,460 lbs/yr

Hooding, vent to fabric filter or scrubber

See (7)
C/B = $0.18/lb

20. Assessment of Fugitive Particulate Emission Factors For Industrial Processes. PEDCo Environmental, Inc. Prepared for USEPA, Research Triangle Park, North Carolina. EPA 450/3-78-107, p. 2-120.

21. Op. cit. Reference 1. p. 2-2.

22. Op. cit. Reference 16. p. 1-2.

23. Op. cit. Reference 1. p. 2-327.

24. Field Operations and Enforcement Manual for Air Pollution Control. Volume III, Pacific Environmental Services, Inc. Prepared for the USEPA, Research Triangle Park, N.C. APTD-1102:7.18.8 1972.

25. Op. cit. Reference 13. 8.1 p. 5.

26. Op. cit. Reference 21. p. 7.18.

27. Op. cit. Reference 1. p. 2-322.

28. Op. cit. Reference 2. p. 453, 454.

29. Ibid. p. 455.

30. Sax, Irwing W. Dangerous Properties of Industrial Materials, 5th Ed. Van Nostrand Reinhold Co. N.Y., N.Y. 1979, p. 967.

31. Ibid. p. 968.

32. Ibid.

33. Ibid. p. 969.

34. The Making Shaping and Treating of Steel, United States Steel, 9th Ed., Herbick and Held, 1971, p. 340.

35. Op. cit. Reference 27. p. 463.

36. Ibid. p. 783.

37. Reasonably Available Control Measures for Fugitive Dust Sources, PEDCo Environmental Inc., Prepared for Ohio EPA, March 1980 See generally Section 2.1.2.

38. Ibid. Section 2.1.1.

39. Op. cit. Reference 1. p. 328.

40. Technical Guidance for Control of Industrial Process Fugitive Particulate Emissions. PEDCo Environmental, Inc. Prepared for U.S. Environmental Protection Agency, Research Triangle Park, North Carolina. EPA-450/3-77-010. March 1977, p. 2-325.

2.22 CONCRETE BATCHING PLANTS

2.22.1 Process Description[1]

There are three general types of concrete batching plants. They are batching (into transit-mix trucks) plants, central-mix plants and dry-batching (into flat-bed trucks) plants.

Concrete batching plants store, convey, measure and blend the components for making concrete. The plants are similar in the method by which the solid raw materials (sand, aggregate and cement) are received, stored, transferred and blended, but differ with respect to where the water is added to the mix.[2]

The raw materials are delivered to the plant by rail or truck. The cement is transferred pneumatically (most commonly) or by bucket elevator to elevated storage silos. The sand and aggregate are generally stored on the ground and transferred to elevated bins via belt conveyor or bucket elevator. From the overhead bins, the materials are dropped into weigh hoppers which weigh out the proper amount of each material.

In batching plants that load transit-mix trucks, the weighed aggregates and cement are dropped into a receiving hopper. The required amount of water is injected into the flowing stream of solids as the mixture of material is emptied from the receiving hopper into the transit-mix truck. The transit-mix trucks mix the batch en route to the site where the concrete is to be poured.

Dry-batch plants mix sand, aggregate and cement and then dump this dry mix into flat-bed trucks. These trucks transport the batch to paving machines at the job site where water is added and mixing takes place.

A central-mix plant uses a centrally located mixer to make wet concrete. The wet concrete is emptied into open-bed trucks and

transported to the job site where the concrete is to be poured.

A process flow diagram for concrete batching is shown in Figure 2.22-1. One of the fugitive emission sources which is common to all concrete batch plants, but not specifically included in this section, is plant roads. Discussion of this fugitive dust source is presented in Section 2.1. Other fugitive emission sources at concrete batching plants include the sand and aggregate storage areas, transferring and conveying operations, cement unloading, cement silo vents, weigh hopper loading, mixer loading (central-mix plants), transit-mix truck loading operations (batching plants) and flat-bed truck loading operations (dry-batching plants).

2.22.2 Fugitive Dust Emission Factors

The potential sources of fugitive dust from concrete batching are shown in Table 2.22-1, along with the corresponding emission factors. All of these factors are based on either engineering judgment or visual observations. No details are available concerning the methodology of development. The reliability of these types of estimates is poor.

The emission factors for plant haul roads are not included in Table 2.22-1. Emission factors for these sources are listed in Section 2.1.

2.23.3 Particle Characterization

Practically all the fugitive dust generated at concrete batching plants is cement dust since most of the sand and aggregate used is damp. Therefore, this section will only concentrate on particle characteristics of cement dust.

The typical oxide composition of cement dust is as follows.[3]

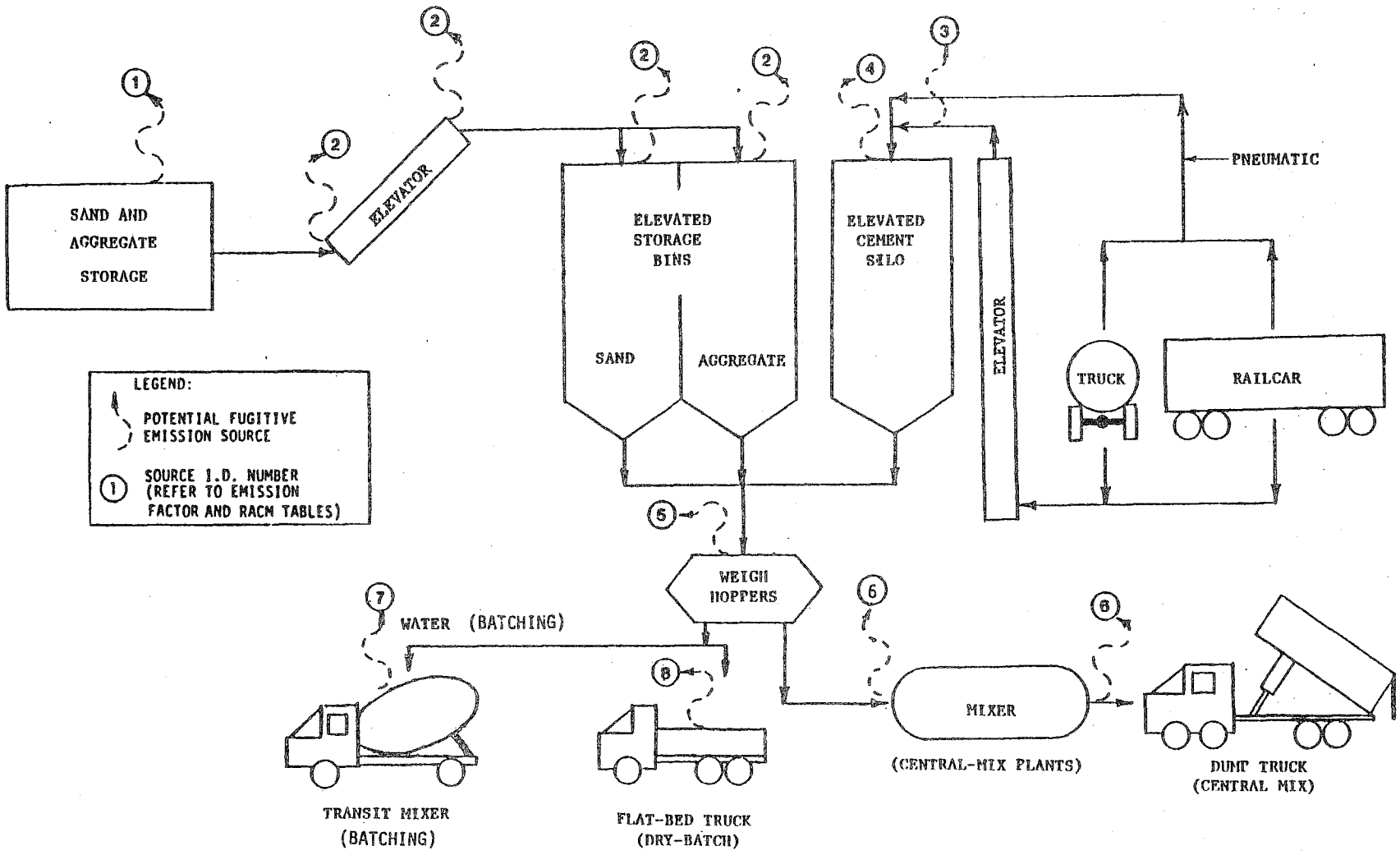

Figure 2.22-1. Simplified process flow diagram for concrete batching and associated fugitive particulate emission sources.

TABLE 2.22-1. FUGITIVE DUST EMISSION FACTORS FOR CONCRETE BATCHING PLANTS

Source	Emission factor	Reliability rating	Reference
(1) Sand and aggregate storage			
loading onto piles	0.04 lb/ton loaded	D	2
vehicular traffic	0.04 lb/ton stored	D	2
wind erosion	0.11 lb/ton stored	D	2
loadout from piles	0.05 lb/ton loaded	D	2
(2) Transfer of sand and aggregate to elevated bins	0.04 lb/ton handled	E	2
(3) Cement unloading to elevated storage silos	0.24 lb/ton unloaded	E	2
(4) Silo vents	0.24 lb/ton unloaded	E	2
(5) Weigh hopper loading of cement, sand and aggregate	0.02 lb/ton loaded	E	2
(6) Mixer loading of cement, sand and aggregate (central-mix plant)	0.04 lb/ton loaded	E	2
(7) Loading of transit-mix truck (batching plant)	0.02 lb/ton	E	2
(8) Loading of flat-bed truck (dry-batching plant)	0.04 lb/ton	E	2

Compound	Fugitive Emission Oxide Composition, Percent By Weight For Cement Dust
Silica	18-23
Al_2O_3	3-8
Fe_2O_3	1-5
CaO	61-66
MgO	0-5
SO_3	2-4
Free Lime	0-2
Minor Compounds	0-1

The American Conference of Governmental Industrial Hygienists has established levels for which airborne chemical compounds could be tolerated without adverse effects on humans.[4] Of the above compounds, aluminum oxide, iron oxide, magnesium oxide and free lime are considered nuisance substances which can be tolerated at relatively high levels. Silica may be hazardous depending upon the amount of quartz contained in the silica. Calcium oxide can be tolerated at levels up to 5 mg/m^3.

Particle size characteristics of the dust vary according to the grades of cement. A range of 10 to 20 percent by weight of particles < 5μm in size is typical for the various grades of cement. Table 2.22-2 summarizes the particle size distribution and bulk density of three common grades of cement.[5]

Table 2.22-2. Physical Characteristics of Three Common Grades of Cement

Characteristic	Weight Percent of Cement		
Particle Size (μm)	Grade I	Grade II	Grade III
0 to 5	13.2	9.6	21.8
5 to 10	15.1	16.6	22.5
10 to 20	25.7	18.8	26.7
20 to 40	29.0	36.6	23.6
40 to 50	7.0	10.4	5.4
50 to 66	5.0	6.0	0
66 to 99	4.0	2.0	0
99 to 250	1.0	0	0
250 (60 mesh)	0	0	0
Bulk Density (lb/ft^3)	54.0	51.5	62.0

2.22.4 Control Methods

This section discusses all available control methods for the fugitive dust emission sources at concrete batching plants.

For the control of fugitive dust emissions from sand and aggregate storage piles, several control methods are available. For loading onto piles, the available control methods are stone ladders, wet suppression (chemical) and telescopic chutes. Loading out operations may be controlled by the use of wet suppression (chemical), watering and underpile conveyors which have a gravity feed to conveyors. For control of wind erosion emissions, the available control methods consist of enclosure (storage bins or silos), wet suppression (chemical) and watering. Lastly, fugitive dust generated by vehicular traffic associated with storage pile activities may be controlled by use of an enclosure, wet suppression (chemical), watering and by using traveling booms rather than vehicles to distribute material.

For control of fugitive dust emissions from plant roadways and parking areas, the reader is referred to Section 2.1.1 of this document.

The amount of fugitive dust generated during the transfer of sand and aggregate from storage to elevated storage bins depends primarily on the surface moisture content of these materials. To ensure that the material is sufficiently moist to prevent dusting, water sprays may be applied at the feed, transfer and discharge points of the belt conveyor or bucket elevator system. To prevent wind losses, most plants partially or completely enclose the conveyor system or use watering and/or chemical dust suppressants.[6] In addition, transfer points may be exhausted to fabric filters for control. Section 2.1.3 and 2.18 further discuss transfer and conveying sources in detail.

A typical cement-receiving and storage system is shown in Figure 2.22-2.[7] The receiving hopper is at or below ground level. If it is designed to fit the canvas discharge tube of the hopper truck, little or no dust is emitted at this point. After a brief, initial puff of dust, the hopper fills completely, and the cement flows from the truck without any free fall.

Cement elevators are either the vertical-screw type or the enclosed-bucket type. Because both are totally enclosed, neither emits any dust if in good condition.[8]

The cement silo must be vented to allow the air displaced by the incoming cement to escape. Unless this vent is filtered, a significant amount of dust escapes. Control can be accomplished by venting to a central dust collecting system or a single collector placed on top of each silo. A fabric type of collector is most often used to vent the cement silo. A fabric "sock", that is placed on each silo vent, can be operated without an exhaust fan when the material is delivered to the silo by bucket elevators because it is simply used to filter the small volume of air that is forced out.[9]

Pneumatic transfer of cement to elevated storage silos from trucks and railcars equipped with compressors and pneumatic delivery tubes is finding increased application over cement transfer by bucket elevator.[10] Pneumatic transfer eliminates emissions between the truck or railcar and the cement silo and requires control only at the cement silo vent by fabric filters. In plants receiving cement pneumatically, use of a fabric "sock" (filtered vent used for the gravity filling of cement) is inadequate.[11]

The volume of conveying air required in the pneumatic delivery system is about 350 cfm to 700 cfm depending on the loading cycle, etc.[12] Since the air is being forced into the silo, the baghouse will require a blower in order to relieve the pressure inside the

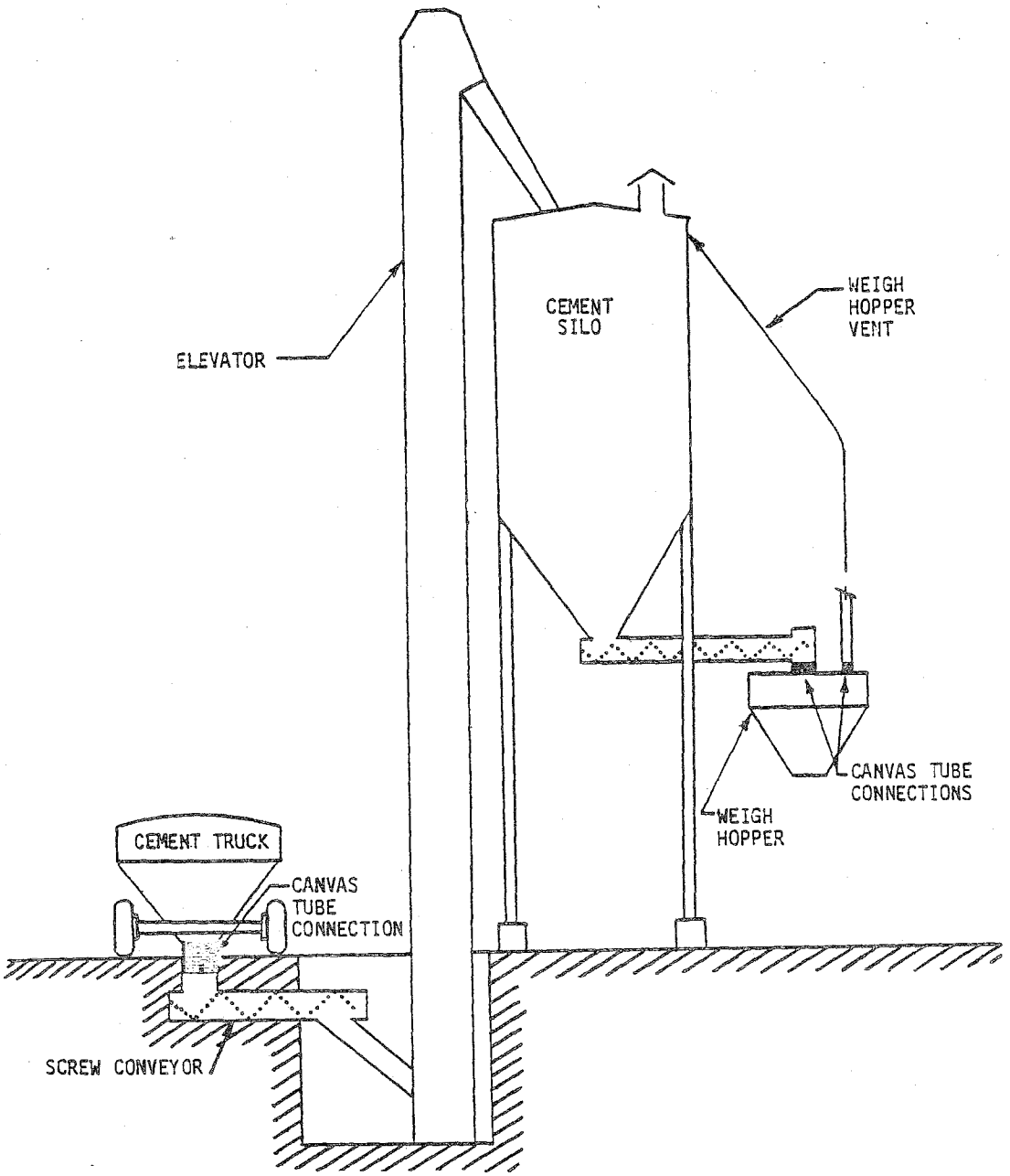

Figure 2.22-2. Cement-receiving and storage system.

silo, and allow flow through the fabric filter. A mechanical shaking mechanism also should be provided to prevent cement from blinding the filter cloth of the baghouse. A vent rate of approximately 1,200 to 1,300 cfm is generally required.[13] The negative pressure created by using a forced draft also prevents dust leakage around access doors and other openings.

Another less expensive type of control measure is to mount a bank of approximately four simple bin vent filters atop the silo. The filtering velocity should not exceed 7 cfm, giving a filter cloth area of approximately 100 square feet for the 700 cfm of air encountered at the end of the cycle. The filter design must include a shaking mechanism to prevent blinding of the filter cloth. The major disadvantage of using a bank of several simple bin vent filters as just described is the possibility of pressure build-up within the silo. If, for some reason, the filter should become blinded, there is a danger of rupturing the silo. Therefore, proper maintenance and regular inspection of the filters are essential.[14]

Where baghouses are used to control other larger cement dust sources as those existing in a dry-batching plant or in a central-mix plant, the cement silo can easily be vented to the same baghouse.[15]

The rapid discharge of sand, aggregate and cement into the weigh hopper generates emissions that may be controlled by venting the displaced air to the individual storage bins and silos or by venting it directly to a central control system.

Fugitive dust occurring from air displaced as dry materials are discharged from the weigh hopper into the mixer at a central-mix plant can be considerable. A mobile hood placed over the outlet of

the discharge end of the mixer coupled with venting to a fabric filter can accomplish effective control. When the mixer is ready to be dumped, this hydraulically operated hood is swung away from the discharge end. For a hood of this type, the indraft face velocity should be approximately 1,000-1,500 ft/min in order to adequately capture the fugitive dust.[16]

At batching plants that load transit-mix trucks, the dropping of a batch from the weigh hopper to the transit mixer can cause cement dust emissions from several points. In the loading of transit-mix trucks, a gathering hopper is usually used to control the flow of materials. Dust can be emitted from the gathering hopper, the truck-receiving hopper and the mixer. The design and location of the gathering hopper can do much to minimize dust emissions. The hopper should make a good fit with the truck-receiving hopper, and its vertical position should be adjustable. Figure 2.22-3 illustrates a design that has been successfully utilized for minimizing these dust emissions.[17] Compressed air cylinders raise and lower the gathering hopper to accommodate trucks of varying heights. A steel plate with a foam rubber backing is attached to the bottom of the gathering hopper and is lowered until it rests on the top of the truck-receiving hopper. Water for the mix is introduced through a jacket around the discharge spout of the gathering hopper and forms a dust-reducing curtain. By discharging the cement hopper into the center of the aggregate stream, and providing choke feed between the weigh hopper and the gathering hopper, dust emissions from the top of the gathering hopper can be minimized. For plants that don't have this type of gathering hopper, an enclosure or a hood vented to a baghouse and made of sheet metal which totally encloses the transit-mix truck-receiving hopper, when in place, may be used.

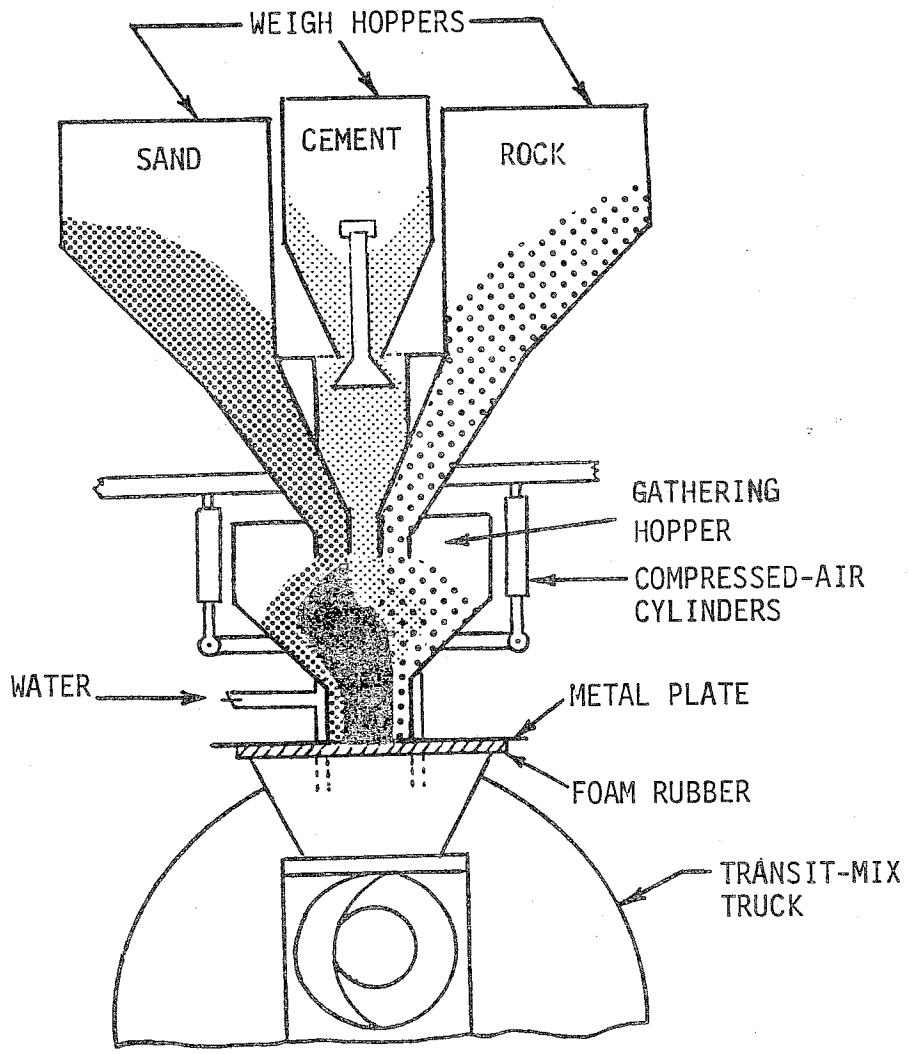

Figure 2.22-3. An adjustable gathering hopper.

Most plants that do dry-batching also do batching with transit-mix trucks; therefore, the weigh hoppers must be high enough to accommodate the transit-mix trucks. Since the receiving hopper of most transit-mix trucks is several feet higher than the top of the flat-bed trucks used to haul the materials in dry-batching, there are considerable fugitive emissions from the fall of material when a dry batch is discharged. Because the plant operator must view the operation and because the truck must have freedom of movement, this is a difficult operation to hood. The truck bed is usually divided into several compartments, and the batch is dropped into each compartment. This necessitates moving the truck after each drop so another compartment of the truck can be loaded. A canopy-type of hood, just large enough to cover one compartment at a time, provides effective dust pickup for venting to a fabric filter and affords adequate visibility. The sides can be made of heavy rubber to give the hood some flexibility and prevent damage if a truck hits it. The hood is sometimes mounted on rails to permit it to be withdrawn and allow batching into transit-mix trucks. The exhaust volume required to collect the dust varies with the shape and position of the hoods. With reasonably good hooding, the required volume is approximately 6,700 to 7,000 cfm.[18]

A conscientious housekeeping program, which includes such measures as prompt cleanup of spills, maintenance of conveying equipment to prevent leaks, and proper handling and disposal of the material collected by fabric filters, is necessary to complete the overall effective control of fugitive emissions at concrete batching plants.

Table 2.22-3 summarizes the available control techniques, their effectiveness and estimated costs, and the RACM selections.

2.22.5 Recommended Reasonably Available Control Measures (RACM)

The RACM selections for concrete batching plant fugitive sources are presented in Table 2.22-3. The recommended control for sand and aggregate stockpiling, as well as the transferring of sand and aggregate to elevated bins, is a wet dust suppression system utilizing a chemical wetting agent. This system gives good control efficiency (estimated 90%[24]) and reduces visible emissions to almost zero percent opacity.[25]

For vehicular traffic at sand and aggregate storage areas, the use of wet suppression (chemical) on unpaved storage areas is recommended. Wetting agents which are sprayed onto the material during processing or at transfer points retain their effectiveness in subsequent storage operations, because they retain surface moisture for extended periods, thereby preventing dusting.

Recommended control for cement unloading to elevated storage silos is the use of enclosures. This is feasible because most plants already control these emissions in this way.

The silo vents (pneumatic loading to silo) can be controlled either by a central control system which controls fugitive emissions from cement dust sources, such as those existing in a dry-batching plant or in a central-mix plant, or by a bank of approximately four simple bin vent filters on top of each silo. These controls are advantageous not only for their high degree of particulate control, but also for the added benefit of product recovery.

For silos which are loaded by bucket elevator, RACM is simply the use of fabric "socks". This control method is adequate for such systems because the air displaced from the silo during such loading is minimal.

Where a central collection system is not employed, the weigh hopper emissions may be controlled by venting back to the bins or silos.

TABLE 2.22-3. A SUMMARY OF THE CONTROL ALTERNATIVES, EFFICIENCIES AND COSTS, AND THE RACM SELECTIONS FOR FUGITIVE DUST EMISSIONS FROM CONCRETE BATCHING PLANTS

Fugitive dust sources	Control alternatives	Control efficiency, %	Control costs, Jan., 1980 $		Cost benefit, $/lb	RACM selection
			Capital	Annualized		
(1) Sand and aggregate storage						
Loading onto pile	Enclosure (stone ladders)	70-99[a,b]	(See Section 2.1)		NA	Wet suppression (chemical)
	Wet suppression (chemical)	80-90[b]	(See Section 2.1)		NA	
	Telescopic chutes	75[b]	(See Section 2.1)		NA	
Loading out	Wet suppression (chemical)	80-90[b]	(See Section 2.1)		NA	Wet suppression (chemical)
	Watering	50[c]	(See Section 2.1)			
	Gravity feed onto conveyor	80[b]	(See Section 2.1)		NA	
Wind erosion	Enclosure	95-99[b]	(See Section 2.1)		NA	Wet suppression (chemical)
	Wet suppression (chemical)	90[b]	(See Section 2.1)		NA	
	Watering	50[b]	(See Section 2.1)		NA	
Vehicular traffic	Enclosure	95-99[c]	(See Section 2.1)		NA	Wet suppression (chemical)
	Wet suppression (chemical)	90[c]	(See Section 2.1)		NA	(good housekeeping)
	Watering	50[c]	(See Section 2.1)		NA	
	Traveling booms to distribute material	no estimate	(See Section 2.1)		NA	
(2) Transfer of sand and aggregate to elevated bins	Enclosure, vent to fabric filter	99[b]	(See Section 2.1)		NA	Wet suppression (chemical)
	Wet suppression (chemical)	95[b]	(See Section 2.1)		NA	
	Watering	50[b]	(See Section 2.1)		NA	
(3) Cement unloading to elevated storage silos	Enclosure[a]	70[d]	860[e]	200[f]	0.13	Enclosure[a]

(continued)

TABLE 2.22-3 (continued)

Fugitive dust sources	Control alternatives	Control efficiency, %	Control costs, Jan., 1980 $		Cost benefit, $/lb	RACM selection
			Capital	Annualized		
(4) Silo vents	Vent to fabric filter[j]	99[g]	107,000[h]	16,300[i]	2.28	Vent to fabric filter[j]
	Fabric "sock"[a]	99[g]	2,300[k]	m	NA	Fabric "sock"[a]
	Vent to fabric filter[l]	99[g]	10,800[n]	3,000[i]	1.42	
	Vent filter[o]	99[g]	5,200[p]	1,500[g]	0.73	Vent filter[o]
(5) Weigh hopper loading of cement, sand, and aggregate	Vent back to bins or silos	95[g]	m	m	NA	Vent back to bins or silos[t]
	Vent to fabric filter	99[g]	q	q	2.28	Vent to fabric filter[j]
(6) Mixer loading of cement, sand, and aggregate (central-mix plant)	Mobile hood, vent to fabric filter	99[g]	q	q	2.28	Mobile hood, vent to fabric filter
(7) Loading of transit-mix truck (batching)	Enclosure	70-99[r]	4,000 to 22,000[r]	m	NA	Enclosure[s]
	Choke feed	90[g]	m	m	NA	
(8) Loading of flat-bed truck (dry-batch)	Canopy-type hood, vent to fabric filter	99[g]	107,000[h]	16,300[i]	2.28	Canopy-type hood, vent to fabric filter[u]

[a] For bucket elevators.

[b] Reference 21. p. 3-6.

[c] Reference 26.

[d] "Weather-tight" system; no active dust collection system.

[e] Based on a 200 ft. conveyor with an enclosure cost of $43/ft. Reference 19. p. 6-3.

[f] Assuming annual cost of approximately 20% of the capital costs.

[g] Engineering judgment.

[h] Reference 20. Based on 10,000 acfm. One system to control emissions from sources 4, 5, 6, & 8.

(continued)

TABLE 2.22-3 (continued)

[i]Reference 20. Based on 2,000 hr/yr operation producing 89,000 tons/yr.

[j]Part of central collection system to control sources 4, 5, 6, & 8 at central mix plants.

[k]Reference 27.

[l]Applicable for plants with pneumatic delivery and no central collection system. Baghouse equipped with mechanical shaking device and blower.

[m]Costs not available.

[n]Reference 22.

[o]Applicable for plants with pneumatic delivery and not utilizing a central collection system. (Bank of approximately 4 simple filtered vents atop the silo).

[p]Reference 22 and 23.

[q]Costs included within those for source 4. One central collection system to control emissions from sources 4, 5, 6, & 8.

[r]Low value, simple enclosure; high value, enclosure plus bag filter.

[s]If an adjustable gathering hopper (choke feed) is not currently being utilized. For plants using such hopper and choke feed, no additional control is required.

[t]Applicable for plants not utilizing a central collection system.

[u]Part of central collection system to control sources 4, 5, & 6.

For mixer loading of cement, sand and aggregate at central-mix plants, RACM is the use of a mobile hood with exhaust to a central fabric filter.

The emissions occurring during the loading of the transit-mix trucks (batching) can be controlled by either enclosure or by choke feeding through the use of an adjustable gathering hopper, whichever is more economically feasible for each specific plant affected.

The use of canopy-type hoods with ventilation to a fabric filter is recommended for the loading of flat-bed trucks at dry-batching plants.

REFERENCES FOR SECTION 2.22

1. Technical Guidance for Control of Industrial Process Fugitive Particulate Emissions. EPA-450/3-77-010, March 1977. p. 2-311.

2. Compilation of Air Pollutant Emission Factors. Second Edition. U.S. EPA, Office of Air and Water Management, Office of Air Quality Planning and Standards. Publication No. AP-42. Research Triangle Park, North Carolina. July 1979. p. 8.10-3.

3. Personal Communication from Mr. M.M. Reid, Assistant to Technical Director, Lone Star Industries, Inc. Cement and Construction Materials Group to Mr. Don Goodwin, U.S. EPA, Emission Standards and Engineering Division, Research Triangle Park, North Carolina. January 12, 1977.

4. Threshold Limit Values for Chemical Substances and Physical Agents in the Workroom Environment. American Conference of Governmental Industrial Hygienists. Cincinnati, Ohio. 1976.

5. Air Pollution Engineering Manual. Second Edition. U.S. EPA, Office of Air and Water Programs, Office of Air Quality Planning and Standards. Publication No. AP-40. Research Triangle Park, North Carolina. May 1973. p. 336.

6. Op. cit. Reference 2. p. 2-316.

7. Op. cit. Reference 5. p. 336.

8. Ibid. p. 335.

9. Op. cit. Reference 2. p. 2-318.

10. Ibid. p. 2-316.

11. Op. cit. Reference 5. p. 335.

12. Op. cit. Reference 2. p. 2-318.

13. Ibid. p. 2-318.

14. Op. cit. Reference 5. p. 335.

15. Ibid. p. 336.

16. Op. cit. Reference 2. p. 2-319.

17. Op. cit. Reference 5. p. 337.

18. Op. cit. Reference 2. p. 2-320.

19. Bohn R., T. Cuscino, Jr., and C. Cowherd, Jr. Fugitive Emissions from Integrated Iron and Steel Plants. Midwest Research Institute, Kansas City, Mo. Prepared for U.S. EPA, Research Triangle Park, North Carolina. EPA-600/2-78-050. March 1978. p. 6-3.

20. Industrial Gas Cleaning Institute, Inc. Nonmetallic Minerals Industries Control Equipment Costs. Prepared for U.S. EPA, Research Triangle Park, North Carolina. Contract No. 68-02-1473, Task No. 19, February 1977.

21. Ela, R.E. Cement Minerals Yearbook, 1973. Volume I. Metals, Minerals, and Fuels. U.S. Department of the Interior. Bureau of Mines. Washington, D.C. 1975. p. 3-6.

22. Gard, Inc. Capital and Operating Costs of Selected Air Pollution Control Systems. EPA-450/3-76-014, May 1976.

23. Personal Communication between Bob Moran, Wheelabrator-Frye, and James A. Cummings, Ohio EPA. Jan. 1980.

24. Op. cit. Reference 2. p. 3-15.

25. Ibid. p. 3-39.

26. Ibid. p. 2-38.

27. Personal Communication between Paul Norris, Kramer-Norris Equipment Company, and James A. Cummings, Ohio EPA. Jan. 1980.

APPENDIX FOR SECTION 2.22

A Typical Concrete Batch Plant Has The Following Data:

89,000 T/yr concrete produced
2,000 hr/yr

Raw material quantities were calculated on the basis of the following percentages (by weight) of the concrete produced:

sand & aggregate	85%
cement	10%
water	5%

Sources

1, 2 Covered in PEDCo's Write-up In Section 2.1, General Fugitive Dust Sources.

3 From PEDCo's Write-up On Material Handling In Section 2.1.

$$C/B = \frac{\$200}{(0.24\ lb/T)\ (89{,}000\ T/yr)\ (.10)\ (.70)} = \$0.13/lb\ TSP\ Removed$$

4 Central Collection System - For Sources 4, 5, 6, & 8.

		cfm thru duct	filter velocity
(A)	Bin & Silo Vents	700	3 fpm
(B)	Weigh Hopper	32	3 fpm
(C)	Mixer	2500	3 fpm
(D)	Flat-bed Truck Loading	6500	3 fpm
	Total = 9732 ≈ 10,000 acfm		

Ac = Area of Cloth

$$3\ fpm = \frac{10{,}000\ acfm}{Ac}$$

$$Ac = 3{,}333\ ft^2$$

[REF. 22] Baghouse Price (Fig. 4-7) $[2910 + 1.6\ (3333)]\ \frac{(249.6)}{(192.1)} = .\$10{,}710$

Costs of Bags (Tables 4-1, 4-2) $3333\ ft^2 \times 2 \times \$.40/ft^2 = \$2666.4$

$\frac{(249.6)}{(192.1)} = \ldots.\ 3{,}465$

(D) Rectangular Hood (8' x 2.4') & Supports Costs
(Fig. 4-17) [L/W Ratio = 4] Plate Area Requirement $1 + 0.615(8)^2 = 40\ ft^2$

(Fig. 4-19) Labor Cost 150

$40\ ft^2 \times 5.625\ lb/ft^2 \times 1.2 = 270$ lbs.

(p. 4-25) Hood Cost LG + \$.208/lb (8)(4) + (.208)(270) $\simeq$ \$90

$\frac{(249.6)}{(192.1)}$ = .. 120

(Fig. 4-21) Ductwork Cost 100 ft x \$50/ft = \$5,000 $\frac{(249.6)}{(192.1)}$ 6,500

(C) Circular Hood (50° θ) + Supports Cost

(Fig. 4-18) Plate Area Requirement $1.343 \times \frac{(40)^2}{(12)} = 165.8\ ft^2$

(165.8)(5.625)(112) = 1119 lbs.

(Fig. 4-20) Labor Cost 350

(p. 4-25) Hood Cost (165.8)(\$.90/ft^2) + (\$.108)(1119) =

\$270 $\frac{(249.6)}{(198.1)} \simeq$ \$350

plus, Hydraulics for Swing-away ($\simeq$\$1,000) \$1,000 +

\$350 = ... 1,350

(Fig. 4-21) Ductwork Cost 100 ft x \$50/ft = \$5,000 $\frac{(249.6)}{(192.1)} \simeq$ 6,500

(A) & (B) (Fig. 4-21) Ductwork Cost (50'+50' = 100') 100 ft x $25/ft = $2500 $\frac{(249.6)}{(192.1)} \simeq$ $3,250

(Fig. 4-24) Elbow Ducts (4) ($850)+($850)+($350) = $2400 $\frac{(249.6)}{(192.1)} \simeq$ 3,120

(Fig. 4-26) Expansion Joints (4) ($2375)+(2375)+($1625) = $8000 $\frac{(249.6)}{(192.1)} \simeq$ 10,400

(Fig. 4-40) Fans (23", Class II, Backwardly Curved, 4" ΔP) 1200 rpm, 8 bhp $1600 $\frac{(249.6)}{(192.1)} =$ 2,079

(Table 4-5) Motor 68 + 18(8) = $212 $\frac{(249.6)}{(192.1)} =$ 275

(Table 4-5) Mag. Starter 150 + 2.5(8) - .00005(8^3) $173 $\frac{(249.6)}{(192.1)} =$ 225

Total Cost =..... $48,494

(4) Central Collection System Capital Costs

1)	Equipment Costs (control device + aux.'s)	=	$48,494
2)	Tax & Freight (7% of 1)	=	3,395
3)	Installation Costs (75% of 1)	=	36,371
4)	Subtotal (1 + 2 + 3)	=	88,260
5)	Engineering (10% of 4)	=	8,826
6)	Subtotal (4 + 5)	=	97,086
7)	Contingencies (10% of 6)	=	970
8)	Total Capital Costs (6 + 7)	=	$106,795

Annualized Costs

Capital Charges $R \cdot PV = PV$ /n=30 i=12%

$R \cdot (8.055) = \$106,795$

$R = \$13,258$

Operating Costs (Fig. 46) ($.35/hr)(2,000 hr/yr) = $700

$\frac{(249.6)}{(192.1)} = \$910$

Maintenance (Table 4-12) $2136

Total Annual Costs = $13,258 + $910 + $2,136 = $16,304

C/B (Central mix plants, sources 4, 5, & 6) $= \frac{\$16,304}{[(89,000)(.10)(.24)+(89,000)(.95)(.02) + (89,000)(.95)(.04)](.99)}$

C/B = $2.28/lb TSP removed

C/B (Dry-batching, Sources 4, 5, & 8) $= \frac{\$16,304}{[(89,000)(.10)(.24)+(89,000)(.95)(.02) + (89,000)(.95)(.04)](.99)}$

C/B = $2.28/lb TSP removed

Silo Vent Emissions

Cement Elevator . . . . Pneumatic Delivery

Silo Capacity = 250 ft^3

Filter Velocity = 3 fpm

Cloth Area = 200 ft^2

Air Flow Rate = 350 cfm during most of loading cycle, increasing to 700 cfm at end of cycle.

Control Device: Baghouse equipped with blower to relieve pressure built up within the silo, and a mechanical shaking mechanism.

Capital Costs

[Ref. 22]	Baghouse	$4,197
	Fabric	208
	Fan w/motor	892
	Equipment	5,297
	Tax, freight (7%)	371
	Maintenance (2%)	106
	Install (75%)	3,973
	Subtotal	9,747
	Engr. (10%)	975
	Subtotal	10,722
	Contingency (10%)	107

Total Capital Investment = $10,829 (Jan.'80) ≈ $10,800

Annual Costs

Operating Costs ($0.35)(2,000 hrs/yr) = $700 $\frac{(249.6)}{(192.1)}$ ≈ $910

Maintenance (2%)(10,800) = $216

Capital Charges PV = R · PV/ n = 10 i = 12%
(5.650) R = $10,800
R = $1,912

Total Annual Costs = $216 + $910 + $1,912 ≈ $3,000

$$C/B = \frac{\$3,000}{(0.24\ lb/T)(89,000\ T/yr)(.10)(.99)}$$

C/B = $1.42/lb TSP removed

Silo Vent Emissions

[Ref. 5]	Cement Elevator		Pneumatic Delivery
	Filter Velocity		7 fpm
	Cloth Area	≈	100 ft^2
	Air Flow Rate	=	700 cfm
	Control Device:		Bank of approximately 4 simple filtered vents atop the silo; should provide shaking mechanism to prevent blinding of cloth.

[Ref. 23] Collector with shaker ≈ \$2/cfm (collector sizing):

700 cfm x 2 (2 to 1) = 1400 cfm x \$2.00 = \$2800 (Jan. '80)

Bags: [Table 4-2] (2)(100) = 200

(200)(\$.40) =\$80 $\frac{(249.6)}{(192.1)}$ = \$104

\$2800 + \$104 = \$2,904

Capital Costs

1.	Equipment Costs (control device & aux.'s)	=	\$2,904
2.	Tax & Freight (7% of 1)	=	203
3.	Installation Costs (40% of 1)	=	1,162
4.	Subtotal (1 + 2 + 3)	=	4,269
5.	Engineering (10% of 4)	=	427
6.	Subtotal (4 + 5)	=	4,696
7.	Contingencies (10% of 6)	=	470
8.	Total Capital Costs	=	\$5,166

Annualized Costs

Operating Costs [Fig. 4-60] (\$0.25)(2,000 hrs/yr) = \$400

$\frac{(249.6)}{(192.1)}$ = \$520

Maintenance [Table 4-12]: \$103

Capital Charges PV = R · PV/n = 10 i = 12%

(5.650) R = \$5,166

R = \$ 914

Total Annual Costs = \$520 + \$103 + \$914 = \$1,537

$$C/B = \frac{\$1,537}{(0.24\ lb/T)(89,000\ T/y)(.10)(.99)}$$

$$C/B = \frac{\$1,537}{2,114.6\ lb/yr}$$

C/B = \$.73/lb TSP Removed

put all the cost estimates on exactly the same basis, but it was attempted to adjust the estimates to be compatible on the basis of year of dollars, size of application, indirect costs (where possible) and annual fixed capital charges (where possible).

The costs were all adjusted to reflect January, 1980 dollars using the Chemical Engineering Cost Index. Applicable index values, including those published after the initial preparation of this document, are as follows:

Annual Index	Monthly Index		
1970 = 125.7	January 1979	=	225.9
1971 = 132.2	July 1979	=	239.3
1972 = 137.2	January 1980	=	249.6*
1973 = 144.1	January 1980	=	248.5
1974 = 165.1	July 1980	=	263.6
1975 = 182.4	January 1981	=	276.6
1976 = 192.1	July 1981	=	303.1
1977 = 204.1	January 1982	=	308.7
1978 = 218.8	January 1982	=	311.8**
1979 = 238.7	July 1982	=	314.2
1980 = 261.2	January 1983	=	315.5
1981 = 297.0			
1982 = 314.0			

*Represents an estimate of the actual index (248.5) which was unavailable at the time this document was initially prepared.

**As of January, 1982, the Chemical Engineering Cost Index was updated and streamlined for greater accuracy. The January, 1982 index (308.7) using the old system is shown above for comparison. All index values after January, 1982, including the 1982 annual index, are based on the new system. For information on the revisions to the cost index, see "CE Plant Cost Index--Revised" in Chemical Engineering, Apr. 19, 1982, p. 153.

To update costs to January, 1980, the multiplier was the January 1980 index of 249.6 divided by the index value reflecting the year of the available estimate.

For cases where costs were unavailable for different process capacities, an appropriate factor was used to scale costs to the selected "typical" size. Where no better data were available, the 0.6 scale factor, as illustrated in the following equation, was used:

$$Cn = r^{0.6}Cp$$

where Cn is the new updated cost,
Cp is the previous cost, and
r is the ratio of the new to previous process capacity.

Where various equipment pieces were excluded, a price estimate was made using the GARD manual. This included items such as fans, ducts, dampers, etc.

Where installation costs were missing, the appropriate values from the GARD manual were used (i.e., ESP's = 75% of equipment, venturi scrubbers = 140% of equipment and fabric filters = 75% of equipment).

In cases where indirect capital charges were not included, an assumed value of 40 percent of direct installed cost was used as a conservative estimate of the costs of engineering, construction and field expense, construction fees, performance tests, shakedown and contingencies.

Where fixed annual capital charges were not available, a value of 17 percent of the turnkey investment was assumed.

APPENDIX B

LISTING OF CHEMICAL DUST SUPPRESSANTS

Appendix B contains a listing of chemical suppressants. Table B-1 presents limited information on various chemical suppressants concerning product type, costs, uses and application rates. This information was obtained from "Technical Guidance for Control of Industrial Process Fugitive Particulate Emissions" and from suppliers. Information presented is as complete as was made available by the suppliers. Note that these are 1976 costs unless otherwise specified.

Table B-1 (continued). CHEMICAL DUST SUPPRESSANTS, THEIR COST, USES, AND APPLICATION RATES[a]

Company/address phone/contact	Product name/ product type	Cost	Uses/comments	Density, dilution and application rates
Dubois Chemical Dubois Tower Cincinnati, Ohio 513-762-6000 Mr. Burger	Floculite 600	100 lb - $2.81/lb 1000 lb - $2.74/lb	Used in waste water treatment from mines. Also helps keep down dust on haul roads.	1-2 lb/1000 gal
Mona Industries, Inc. 65 E. 23rd St. Paterson, NJ 07524 201-274-8220 Mr. George Lowry	Monawet Mo-70E	500 lb drums 1-50 drums - $0.455/lb Bulk - $0.385/lb	Used in coal industry as dust suppresant	0.1 percent in water, must be reapplied when water evaporates
AMSCO Division Union Oil Company of California 14445 Alondra Blvd. La Miroda, Calif. 90638 714-523-5120 Dr. Ralph H. Bauer	Res AB 1881 Styrene Butadiene		Soil stabilizer particularly in conjunction with wood fiber mulches. Free pumping in conventional hydroseeding equipment. Not to be applied in soils with pH less than 6.0.	8.2 ± 0.1 lb/gallon
Nalco Chemical Co. 2901 Butterfield Oak Brook, IL 60521 312-887-7500 Mr. R.E. Finch	Nalco 8800	55 gl. drums[b] .83¢ to .43¢ per pound. Bulk .593¢	Dust suppressant use with water sprays at transfer points, dump stations, etc.	Range from 1 to 200 to 1 to 2500 water as needed
	Nalco 8801	55 Gal. Drums:[b] $.41 to $.543/lb. Bulk: $.32/lb.	Dust Suppressant. Use with water sprays, longwalls, cont. miners. Transfer points.	Dosage from 1 in 1000 to 1 in 3500
	Nalco 8803	55 Gal. Drums:[b] $.940/lb. to $1.040/lb.	Tailings binder for revegetation and soil stabilization.	1 to 100 with water at .25 gallons of solution per square yard.
	Nalco 8806	Bulk: $1.36/gal.[b] Drums: Available by special order only.	Long-lasting road dust suppressant. Can in some cases eliminate watering for 60-90 days.	Neat at an average .25 gallons per square yard. Application Service available.

[a] Mention of company or product names is not to be considered as an endorsement by the Ohio Environmental Protection Agency.

[b] 1980 prices.

Table B-1 (continued). CHEMICAL DUST SUPPRESSANTS, THEIR COST, USES, AND APPLICATION RATES[a]

Company/address phone/contact	Product name/ product type	Cost	Uses/comments	Density, dilution and application rates
Nalco Chemical Co. 2901 Butterfield Oak Brook, IL 60521	Nalco 8820	55 gl. drums[b] .565/lb. to .750/lb. Bulk .511/lb.	Binding agent for revegetation Pile binder prevents windage loss and conserves raw material	1 to 10 water at dosages ranging from .1 gallon to .3 gallons per square yard.
MATESON CHEMICAL CORPORATION Easton Division 1025 E. Montgomery Ave. Phila., PA 19125 (215) 423-3200 Mr. Mark Mateson	DUST-SET®, Dust Abator	55-gal. drum[b] 1-4 7.40/gal. 5-9 7.38/gal. 10-39 7.35/gal. > 39 7.30/gal.	Surfactant & protective adherent resinous media for dusty areas with high human density.	8.7 lbs. per gallon 1.500 ± 200 dil. margin 1 dil. gal. = 100 ft.^{2}
Midwest Industrial Supply, Inc. P.O. Box 8431 Canton, Ohio 44711 (216) 499-7888 Bob Vitale	SOIL-SEMENT™ Acyrlic resin emulsion	55 gallon drums[c] $1.96/gallon Bulk $.99/gallon	Binds fugitive dust from all sources (haul roads, parking and yard areas, stockpiles, ash, tailings). Stops dust; reduces rutting, potholes; increases load bearing strength; does not wash away or leach out. Mix with water and spray. Clean. Excellent weatherability to rain and ultraviolet light.	Heavy traffic - 1 gal/40 ft^2 Parking lot - 1 gal/60 ft^2 Road berm - 1 gal/80 ft^2 Yard area - 1 gal/80 ft^2 Ash, tailings - 1 gal/100 ft^2
	COALBINDER™	55 gallon drums[b] $2.27/gallon Bulk $2.04/gallon	Designed for use in coal industry as a dust suppressant: coating over open transport vessels to prevent transportation losses; eliminates airborne particulate matter on stockpiles.	Open transport vessels - 1 gal/300 ft^2 Stockpiles - 1 gal/300 ft^2

[a] Mention of company or product names is not to be considered as an endorsement by the Ohio Environmental Protection Agency.

[b] 1980 prices.

[c] 1981 prices.

Table B-1 (continued). CHEMICAL DUST SUPPRESSANTS, THEIR COST, USES, AND APPLICATION RATES[a]

Company/address phone/contact	Product name/ product type	Cost	Uses/comments	Density, dilution and application rates
Liquid Calcium Chloride Sales, Inc. P.O. Box 215 Kawkawlin, Mi. 48631 (517) 684-5860 Mr. Melvin Gerard Jr.	Liquidow (38%) Dowflake (77-80%) Calcium Chloride	$ 32.00 ton[c] $160.00 ton	Surface stabilization and dust control material. Attracts moisture from the air binding aggregate particles and fines together. Resists evaporation.	172 gals per ton 8 lbs per gal water yields 1.4 final volume gals. (350 gals per ton) Application rate: 1 gal per 50-60 sq. ft.
Neyra Industries, Inc. 5391 Wooster Road Cincinnati, OH 45226 (513) 321-5500 Mr. Bernie Schlake	Resinex 60 Cold water emulsion of petroleum derived resins.	55 gallon drums[b] $ .63/gallon Bulk $ .38/gallon	Unpaved haul roads, parking areas, stockpile access roads; non-toxic, non-corrosive, waterproof and stable after application. May be stored 12 months or longer. Applied diluted with any type of equipment used to apply water.	8.33#/gallon 1:5 Dilution: .75 to 1.25 gals/sq. yard (for parking lots and dirt roads) 1:8 Dilution: .3 to 1.0 gals/sq. yard for thin layer or loose dirt. 1:10 Dilution: for improved compaction of all unpaved surfaces and erosion prevention

[a] Mention of company or product names is not to be considered as an endorsement by the Ohio Environmental Protection Agency.

[b] 1980 prices.

[c] 1981 prices.