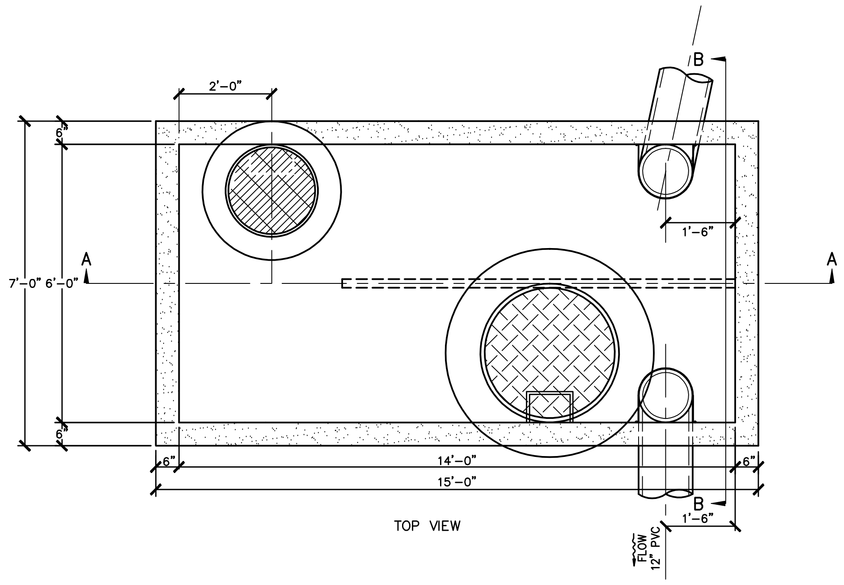

TOP VIEW

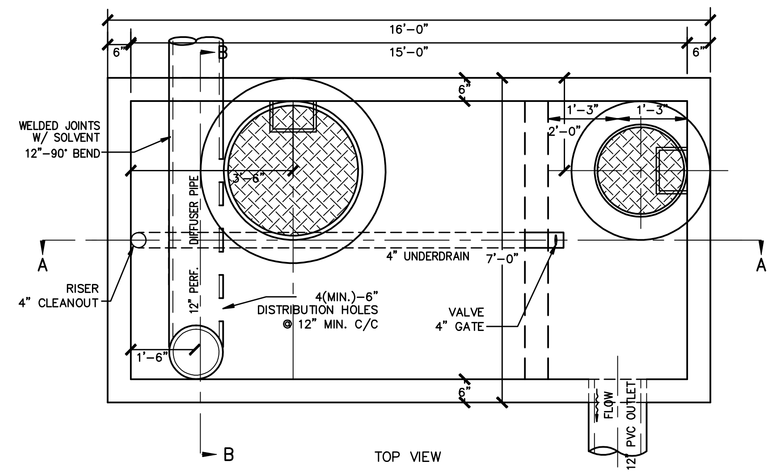

TOP VIEW

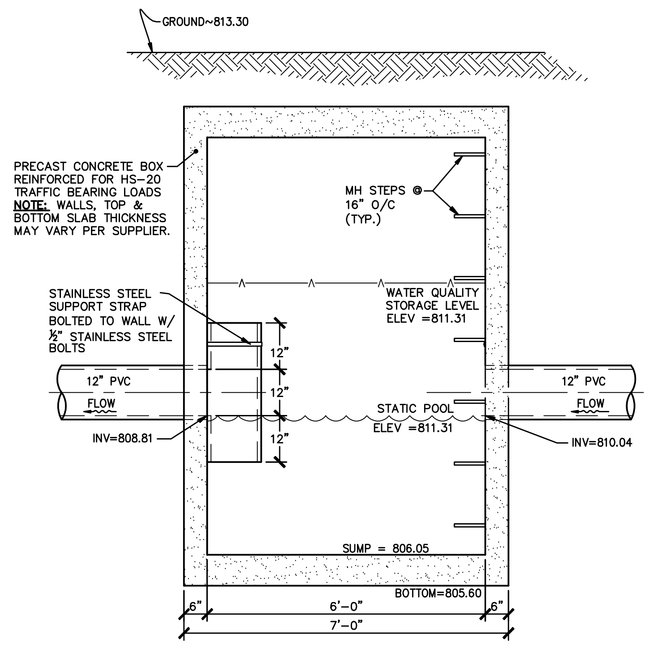

END VIEW
SECTION B-B

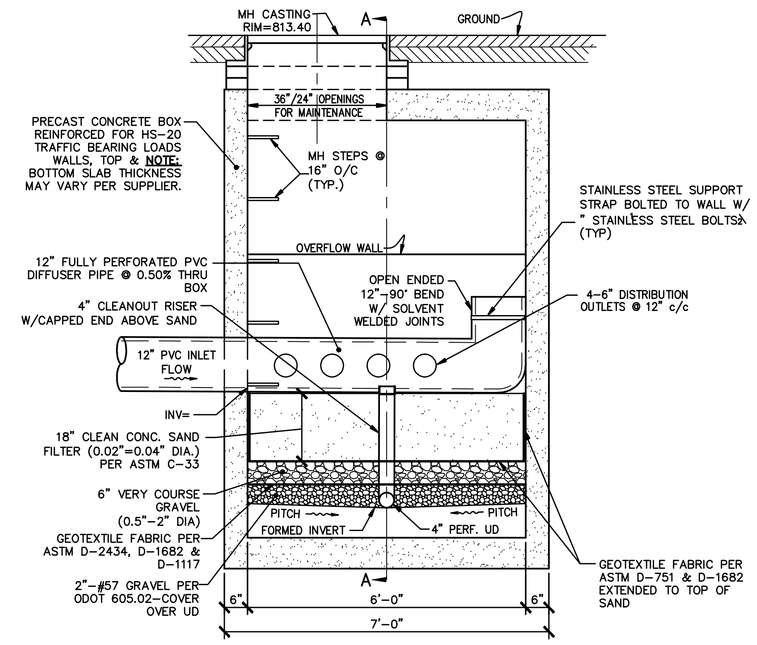

END VIEW
SECTION B-B

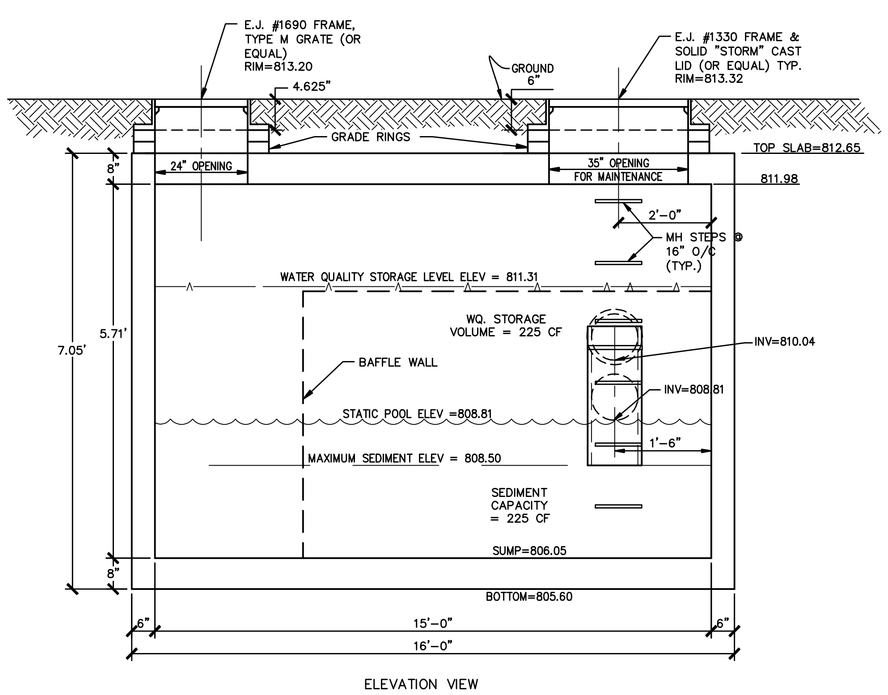

ELEVATION VIEW

SECTION A-A

SEDIMENT TANK

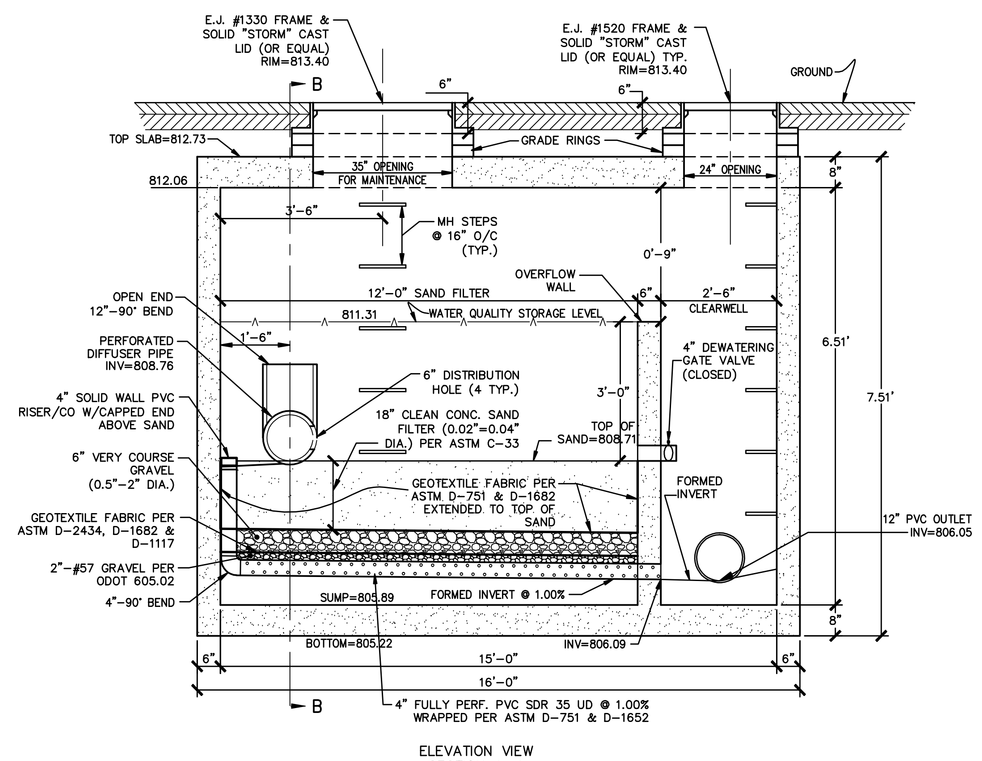

ELEVATION VIEW
SECTION A-A

SUB-SURFACE SAND FILTER

KS ASSOCIATES

NEWMAN ARCHITECTS

NEWMAN ARCHITECTS, LLC
Formerly Herbert S. Newman & Partners P.C.
300 York Street, New Haven, CT 06511
203.772.1900 Fax 203.772.1907
www.newmanarchitects.com

THE DRAWINGS AND ALL THE IDEAS, ARRANGEMENTS, DESIGNS, AND PLANS INDICATED THEREON OR REPRESENTED THEREBY ARE OWNED BY AND REMAIN THE PROPERTY OF NEWMAN ARCHITECTS LLC AND NO PART THEREOF SHALL BE UTILIZED BY ANY PERSON, FIRM OR CORPORATION FOR ANY PURPOSE WHATSOEVER EXCEPT WITH THE SPECIFIC WRITTEN PERMISSION OF NEWMAN ARCHITECTS LLC.
COPYRIGHT © 2005

CLIENT
OBERLIN COLLEGE
173 WEST LORAIN STREET
OBERLIN, OHIO 44074

LANDSCAPE ARCHITECT
KNIGHT AND BIOLAR
3029 PROSPECT AVENUE
CLEVELAND, OHIO 44115
T 216-391-0910
F 216-391-0920

CIVIL ENGINEER
KS ASSOCIATES
260 BURNS STREET
SUITE 100
ELYRIA, OHIO 44035
T 440-365-4730
F 440-365-4790

STRUCTURAL ENGINEER
WESTLAKE, REED, LESKOSKY
925 EUCLID AVENUE
CLEVELAND, OHIO 44074
T 216-522-1350
F 216-522-1357

M / E / P ENGINEER
WESTLAKE, REED, LESKOSKY
925 EUCLID AVENUE
CLEVELAND, OHIO 44074
T 216-522-1350
F 216-522-1357

CODE CONSULTANT
444 WILMOT CENTER ROAD
P.O.BOX 216
ELKINS, NEW HAMPSHIRE 03233
T 603-526-9190
F 603-526-4979

COST ESTIMATING
PCS
1360 EAST 9TH STREET
SUITE 910
CLEVELAND, OHIO 44114
T 216-619-1700
F 216-619-1770

ISSUED FOR CONSTRUCTION

REVISIONS
6/22/09 PERMIT SET
7/24/09 FINAL COORDINATION

OBERLIN COLLEGE NORTH PROFESSOR STREET STUDENT HOUSING

169 NORTH PROFESSOR ST.
OBERLIN, OHIO

PROJECT NUMBER
0803.00 (038)

SWPP NOTES AND DETAILS

DATE
JULY 24, 2009

DRAWN BY
CCC

SCALE
As indicated

CIVIL

SWPPP.5

8/31/2010 6:04 PM R:\0803\0803\41\CIVIL 3D\DESIGN\DEVDO SHEETS\0803-41-SWPP04.DWG