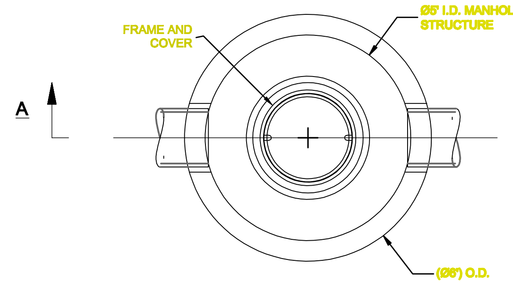

PLAN VIEW

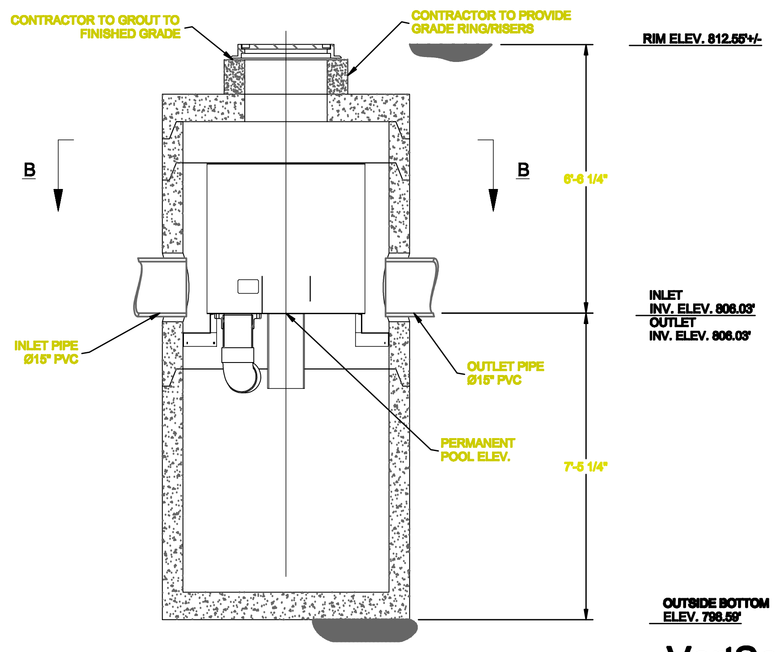

SECTION A-A

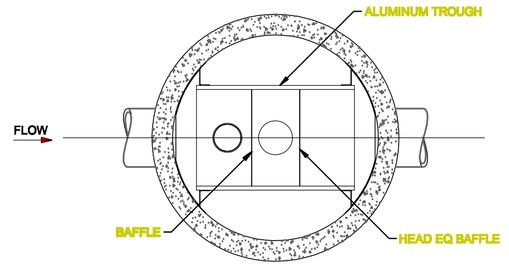

SECTION B-B

STRUCTURE MODEL	AREA TREATED	2-YR DISCHARGE	VORTSENTRY TREAMENT FLOW 80% REMOVAL RATE (CFS)
HS 60	3.05 ACRES	1.88 CFS	2.20 CFS

MATERIALS LIST - PROVIDED BY CONTECH

COUNT	DESCRIPTION	INSTALLED BY
1	INTERNAL ALUM. COMPONENTS	CONTECH
1	SEALANT FOR JOINTS	CONTRACTOR
1	Ø24" x 4" FRAME AND COVER	CONTRACTOR

SITE DESIGN DATA

WATER QUALITY FLOW RATE	2.2 cfs
PEAK FLOW RATE	2.71 cfs
RETURN PERIOD OF PEAK FLOW	10 YRS

GENERAL NOTES
1. CONTECH TO PROVIDE ALL MATERIALS UNLESS NOTED OTHERWISE.
2. FOR FABRICATION DRAWINGS WITH DETAILED STRUCTURE DIMENSIONS AND WEIGHT, PLEASE CONTACT YOUR CONTECH STORMWATER SOLUTIONS REPRESENTATIVE. www.contechstormwater.com
3. VORTSENTRY HS WATER QUALITY STRUCTURE SHALL BE IN ACCORDANCE WITH ALL DESIGN DATA AND INFORMATION CONTAINED IN THIS DRAWING.
5. STRUCTURE AND CASTINGS SHALL MEET AASHTO H20 LOAD RATING.

INSTALLATION NOTES
1. ANY SUB-BASE, BACKFILL DEPTH, AND/OR ANTI-FLOTATION PROVISIONS ARE SITE-SPECIFIC DESIGN CONSIDERATIONS AND SHALL BE SPECIFIED BY ENGINEER OF RECORD.
2. CONTRACTOR TO PROVIDE EQUIPMENT WITH SUFFICIENT LIFTING AND REACH CAPACITY TO LIFT AND SET THE VORTSENTRY HS MANHOLE STRUCTURE (LIFTING CLUTCHES PROVIDED).
3. CONTRACTOR TO INSTALL JOINT SEALANT BETWEEN ALL STRUCTURE SECTIONS AND ASSEMBLE STRUCTURE.
4. CONTRACTOR TO PROVIDE, INSTALL, AND GROUT PIPES. MATCH PIPE INVERTS WITH ELEVATIONS SHOWN.

STRUCTURE WEIGHT
APPROXIMATE HEAVIEST PICK = 10,000 LBS.

VortSentry® HS
U.S. AND FOREIGN PATENTS PENDING

CONTRACT

FOR ADDITIONAL INFORMATION PLEASE CONTACT:
200 SMITHFIELD DR., SCARBOROUGH, ME 04074
PH: 207-885-9850 FAX: 207-885-9829

NCI

WATER QUALITY UNIT
NOT TO SCALE

VORTSENTRY HS MODEL HS60 - 43755-01
OBERLIN COLLEGE - N. PROFESSOR
OBERLIN, OH
for SYSTEM: Combined Areas

This drawing or electronic file is for the purpose of presenting information to a customer in connection with a project being considered by CONTECH Stormwater Solutions (CSS). It is not to be used for any other purpose or on any other equipment, systems or product configurations not specifically proposed by CSS for this project, if any, and is proprietary. Reproduction in any part of this drawing, electronic file or any information contained therein is not permitted without the express written consent of CSS and is provided only for proposed use of proprietary information.

CONTECH STORMWATER SOLUTIONS
contechstormwater.com

BASE FILE NAME: 43755-01-CON
SCALE: NONE
DESIGNED: JBM
DRAWN: RTF
DATE: 06/18/09
REV:

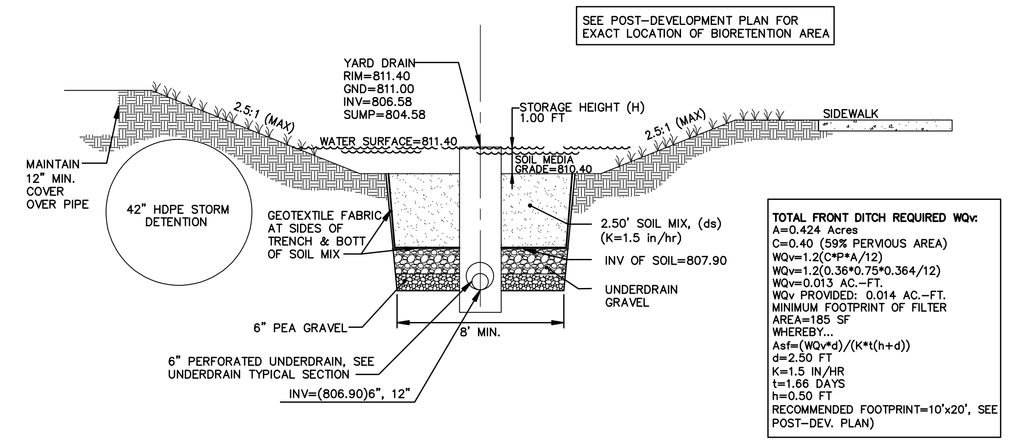

TOTAL FRONT DITCH REQUIRED WQv:
A=0.424 Acres
C=0.40 (59% PERVIOUS AREA)
WQv=1.2(C*P*A/12)
WQv=1.2(0.36*0.75*0.364/12)
WQv=0.013 AC.-FT.
WQv PROVIDED: 0.014 AC.-FT.
MINIMUM FOOTPRINT OF FILTER AREA=185 SF
WHEREBY...
Asf=(WQv*d)/(K*t(h+d))
d=2.50 FT
K=1.5 IN/HR
t=1.66 DAYS
h=0.50 FT
RECOMMENDED FOOTPRINT=10'x20', SEE POST-DEV. PLAN)

BIORETENTION SECTION
NOT TO SCALE

BIORETENTION NOTES:
- INSTALLATION OF BIOSWALES MAY BE SUBJECT TO INSPECTION BY THE CITY AND/OR REPRESENTATION FROM THE OEPA.
- BIORETENTION PLANTS SHALL BE NATIVE PLANTS WITHSTANDING WET CONDITIONS, SEE PLANT SCHEDULE THIS SHEET.
- CONSTRUCTION OF BIORETENTION FILTER MEDIA AREAS SHALL ONLY COMMENCE AFTER ROUGH GRADING IS COMPLETE AND ALL UPSLOPE CONTRIBUTING DRAINAGE AREAS ARE STABILIZED.
- BIORETENTION INSTALLATION SHALL NOT BE DONE DURING PERIODS OF PRECIPITATION.
- PEA GRAVEL SHALL BE CLEAN, DOUBLE WASHED, #78 STONE.
- STONE TRENCH BEHIND CURB SHALL NOT EXCEED 4" IN DIAMETER.
- UNDERDRAIN GRAVEL SHALL BE CLEAN, DOUBLE WASHED #57 STONE
- UNDERDRAINS SHALL BE 6" PERFORATED POLYETHYLENE PIPE WITH GEOTEXTILE FABRIC @ 1.0% SLOPE UNLESS OTHERWISE NOTED.
- GEOTEXTILE FABRIC SHALL BE PERMEABLE NON-WOVEN GEOTEXTILE WITH A FLOW RATE > 110 GPM, PUNCTURE STRENGTH-125 LB, MULLEN BURST STRENGTH-400PSI, AND TENSILE STRENGTH-300LB.
- WHEN EXCAVATING TO PLACE FILTER MEDIA, TAKE PRECAUTIONS TO AVOID COMPACTING THE AREA WITH CONSTRUCTION EQUIPMENT, FOOT TRAFFIC, DROPPED GRAVEL, ETC. ANY COMPACTED SOILS INCLUDING THE IN-SITU TO REMAIN SHALL BE REMEDIATED BY FRACUTRING WITH A TILLAGE DEVICE 12 INCHES DEEP. SMEARED SOILS MAY BE REMEDIATED WITH A HAND RAKE OR ROTO-TILLER.
- SOIL MIX SHALL BE "KURTZ BROS. INC." BIORETENTION SOIL MIX OR APPROVED EQUIVALENT. TESTING RESULTS SHOULD BE PROVIDED FOR COMPOSITION & INFILTRATION RATES OF SOIL MIX. MIX SHALL HAVE NO LESS THAN 72% SAND AND NO GREATER THAN 10% CLAY. ORGANIC MATTER SHALL NOT EXCEED 10%. INITIAL INFILTRATION RATE, SHALL BE NO LESS THAN 3.5 INCHES/HOUR AND NOT MORE THAN 4.5 INCHES/HOUR. PREDICTED INFILTRATION RATES OVER TIME DESIGNED TO BE 1.5 INCHES/HOUR. SOILS SHALL BE PLACED IN 12-18 INCH LIFTS AND ONLY LIGHTLY COMPACTED. GENTLE SOAKING WITH WATER MAY BE USED TO ENCOURAGE SETTLING.
- EACH BMP LOCATION SHALL HAVE UNDERDRAINS WITH CLEANOUTS/OBSERVATION WELLS. CLEANOUTS SHALL BE 6" IN DIAMETER WITH APPROPRIATE 45° CONNECTIONS. THEY SHALL EXTEND 6" ABOVE TOP OF GRADE AND HAVE A REMOVABLE WATERTIGHT CAP. THE ENDS OF THE UNDERDRAINS NOT TERMINATED IN A CLEANOUT SHALL BE CAPPED.
- DETAILS OF THE PLANT MATERIAL FOR BIORETENTION AREA ARE SPECIFIED IN THE LANDSCAPE PLAN

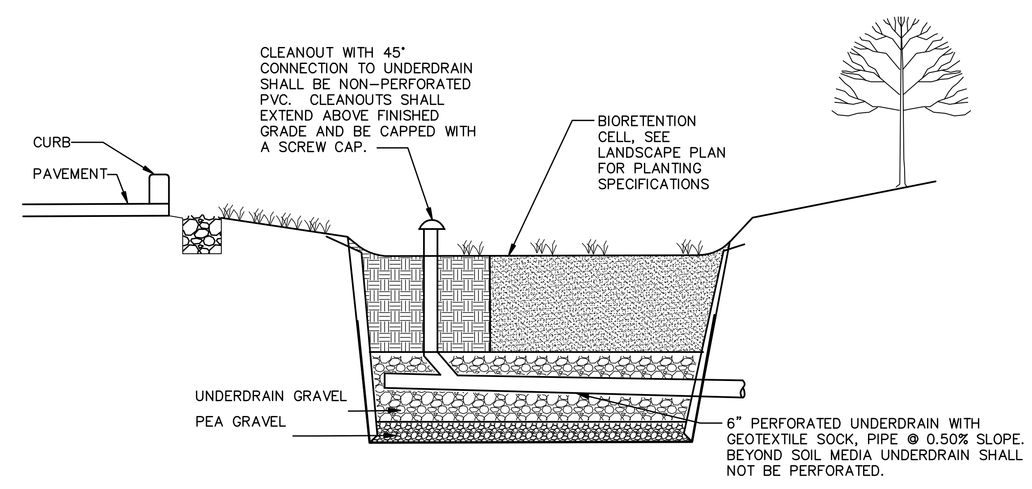

TYPICAL BIORETENTION UNDERDRAIN DETAIL
NOT TO SCALE

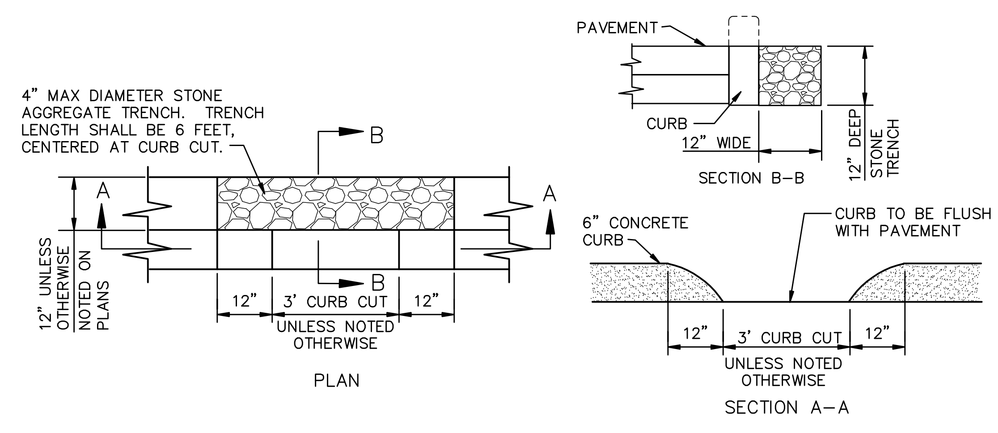

CURB CUT FOR DRAINAGE TO BIORETENTION
NOT TO SCALE

BIORETENTION DETAILS

KS ASSOCIATES

NEWMAN ARCHITECTS

NEWMAN ARCHITECTS, LLC
Formerly Herbert S. Newman & Partners P.C.
300 York Street, New Haven, CT 06511
203.772.1900 Fax 203.772.1907
www.newmanarchitects.com

THE DRAWINGS AND ALL THE IDEAS, ARRANGEMENTS, DESIGNS, AND PLANS INDICATED THEREON OR REPRESENTED THEREBY ARE OWNED BY AND REMAIN THE PROPERTY OF NEWMAN ARCHITECTS LLC AND NO PART THEREOF SHALL BE UTILIZED BY ANY PERSON, FIRM OR CORPORATION FOR ANY PURPOSE WHATSOEVER EXCEPT WITH THE SPECIFIC WRITTEN PERMISSION OF NEWMAN ARCHITECTS LLC.
COPYRIGHT © 2008

CLIENT
OBERLIN COLLEGE
173 WEST LORAIN STREET
OBERLIN, OHIO 44074

LANDSCAPE ARCHITECT
KNIGHT AND BITOLAR
3029 PROSPECT AVENUE
CLEVELAND, OHIO 44115
T 216-391-0910
F 216-391-0620

CIVIL ENGINEER
KS ASSOCIATES
260 BURNS STREET
SUITE 100
ELYRIA, OHIO 44035
T 440-365-4730
F 440-365-4790

STRUCTURAL ENGINEER
WESTLAKE, REED, LESKOSKY
925 EUCLID AVENUE
CLEVELAND, OHIO 44074
T 216-522-1350
F 216-522-1357

M / E / P ENGINEER
WESTLAKE, REED, LESKOSKY
925 EUCLID AVENUE
CLEVELAND, OHIO 44074
T 216-522-1350
F 216-522-1357

CODE CONSULTANT
444 WILMOT CENTER ROAD
P.O.BOX 216
ELKINS, NEW HAMPSHIRE 03233
T 603-526-9190
F 603-526-4979

COST ESTIMATING
PCS
1360 EAST 9TH STREET
SUITE 910
CLEVELAND, OHIO 44114
T 216-619-1700
F 216-619-1770

ISSUED FOR CONSTRUCTION

REVISIONS
6/22/09 PERMIT SET
7/24/09 FINAL COORDINATION

OBERLIN COLLEGE NORTH PROFESSOR STREET STUDENT HOUSING

169 NORTH PROFESSOR ST.
OBERLIN, OHIO

PROJECT NUMBER
0803.00 (038)

SHEET NAME
SWPP DETAILS

DATE
JULY 24, 2009

DRAWN BY
CCC

SCALE
As indicated

CIVIL

SWPPP.5

06/18/2009 5:09 PM P:\0803\0803.00\CIVIL EXCEPTION\DEVCO SHEETS\0803.01-C-SWPPP.DWG