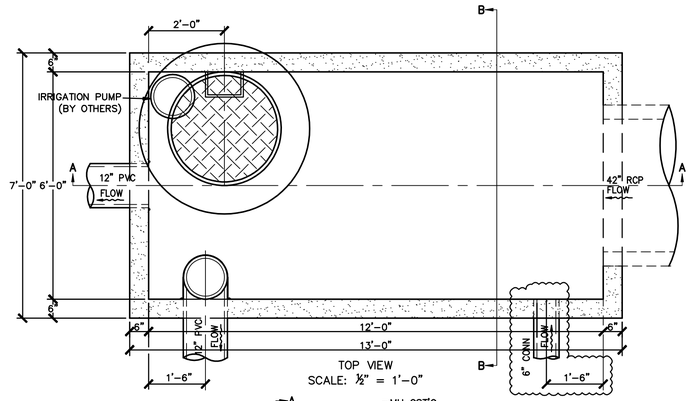

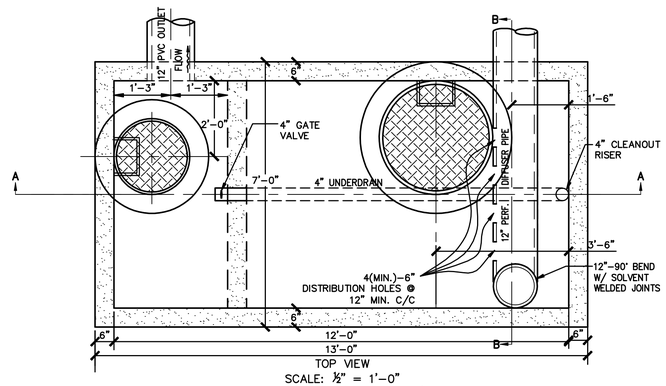

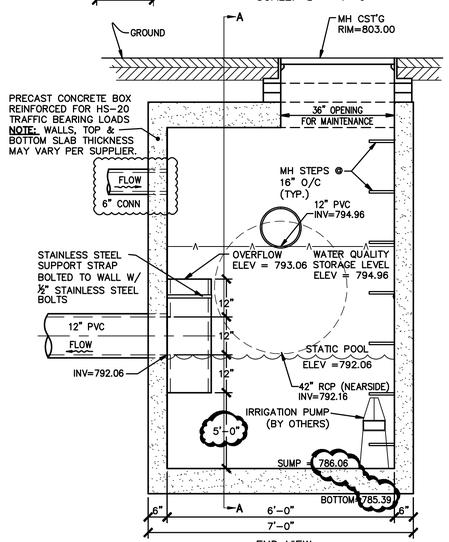

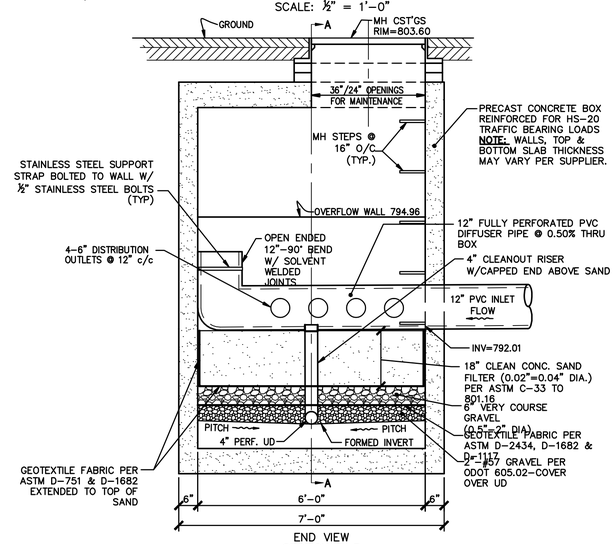

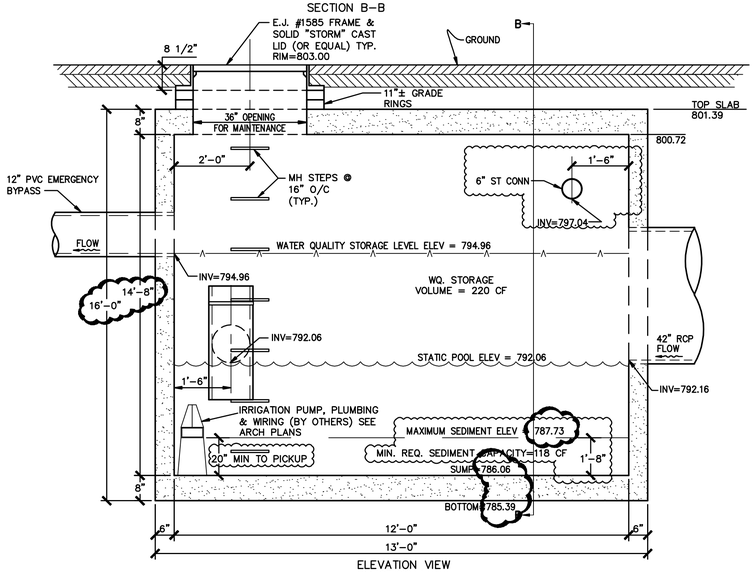

SEDIMENT TANK (STRUCTURE 8)

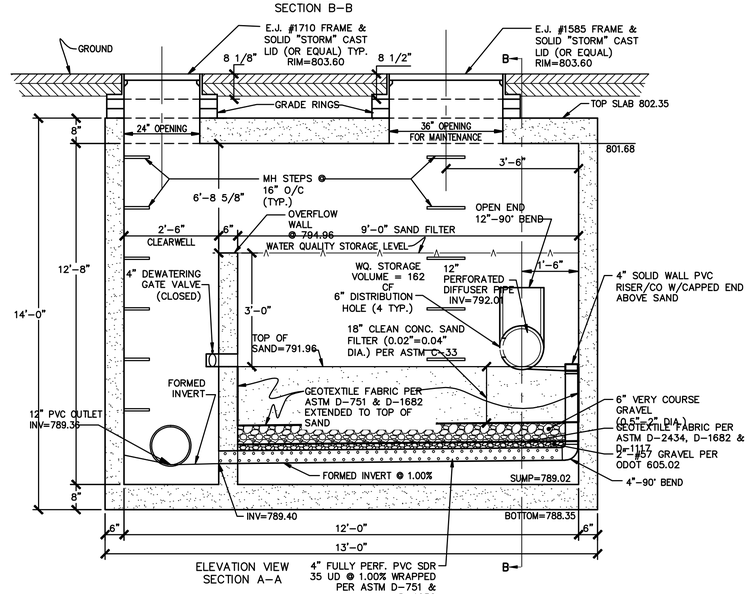

SUB-SURFACE SAND FILTER (STRUCTURE 7)

UNDERGROUND SAND FILTER DESIGN

Required Water Quality Volume:

Rainfall Depth , P	0.75	in	for sizing water quality structure (Ohio uses 0.75 in)
Drainage Area, A	57,064	sf	1.310 acres
Impervious Area	48,352	sf	
Impervious ratio, i	0.85		
runoff c	0.66		*(c = 0.858i^3-0.78i^2+0.774i+0.04)*
WQv	0.0541	ac-ft	*(WQv=(c*P*A/12))*
WQv	2,357	cf	
Required WQv	0.0108	ac-ft	*20% WQv*
Required WQv	471	cf	

Required Filtration Bed Footprint:

Depth of Sand Filter, d_f	1.5	ft	*(USEPA uses minimum of 1.5 ft)*
Hydraulic Conductivity, k	3.5	ft/day	*(USEPA uses 3.5ft/day and Metcalf & Eddy uses 4 gal/min*A$_f$)*
Avg. Ht. Of Available Head, h_f	1.5	ft	*(h_f=Hmax/2)*
Draw Down Time, t	1.67	days	*(OEPA requires 40 hours for sand filter)*
Impervious area, I	48,352	sf	
Porosity, n	0.4		*(0.4 typical for sand)*
Depth of Underdrain System, d_u	0.67	ft	*(A min. of 8" should be used - 4" underdrain with 4" aggregate above it)*
WQv =	471	cf	
Required Footprint of Filter Media, Af	40.3	sf	*(From Darcy's law Af=WQv*df[k*(hf+df)*tf])*

Predict Filtration Bed Chamber Size:

Predict Width, Wf	6	ft	
Predict Length, Lf	9	ft	
No. of Units	1		
Footprint Provided, Af	54	sf	**Meets Requirements**
Filter Bed Volume, Vf	32	cf	*(where Vf=Af*df*n)*

Required Sedimentation Chamber:

WQv	471	cf	

SEDIMENT TANK DESIGN

Impervious Area, I	85	%	
Required Footprint, As	31	sf	*(As=0.066*WQv if I<75% or As=0.0081*WQv if I>75%)*
Required Volume, Vs	117.75	cf	(USEPA recommends Vs=0.25*WQv)
Width, Ws	6	ft	
Predict Length, Ls	12.0	ft	**Meets Requirements**
Depth Above Filter, ds1	3.0	ft	(where ds1=2*hf)
Depth Below Underdrain, ds2	0.0	ft	(if sedimentation chamber is not depressed, ds2=0)
Depth of Chamber, ds	3.0		(where ds=ds1+ds2)
Provided Footprint, As	72	sf	**Meets Requirements**
Volume Provided for Sedimentation Chamber, Vs	216	cf	*(where Vs=Ws*Ls*ds)*

Check Total Volume Provided:

Porosity, n	0.4		*(0.4 typical for sand)*
Volume Provided for Filter Bed, Vf	32	cf	*(where Vf=Af*df*n)*
Volume Provided Above Filter Chamber, Vtemp	162	cf	*(where Vfh=2*h*Af)*
Volume Provided For Sedimentation Chamber, Vs	216	cf	
Additional Pipe Volume	96.2	cf	10 LF of 42" pipe (9.62 cf/lf)
Total Volume Provided, WQv	474	cf	(where WQv=Vtemp+Vs)
Required Volume, WQv	471	cf	**Meets Requirements**

Additional Volume Provided:

Length, Ladd	21.0	ft	(where Ladd=Ls+Lf)
Width, Wadd	6	ft	
Area, Aadd	126	sf	(where Aadd=Ladd*Wadd)
Depth, dadd	2.89	ft	(measured to the inside top of structure)
Additional Volume, Vadd	364.14	cf	(where Vadd=Ladd*Wadd*dadd)

Note:
If sand diam. = 0.02 in and df = 18 in and v = 4gal/min*Af then Hloss = approx. 2ft

CHAMBER SCHEMATIC

Side View

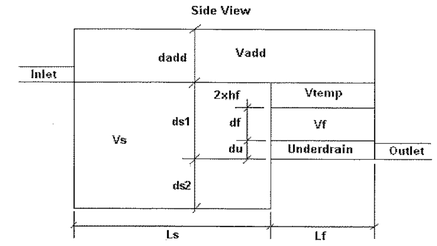

Outlet End View

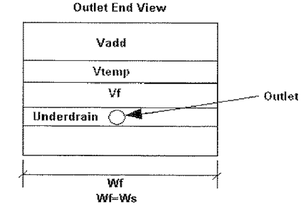

REVISIONS			
DATE	DESCRIPTION	BY
5-18-09	REDIRECT ST CONN TO SED TANK, RAISE PUMP	RRB
3-13-09	DEEPEN SEDIMENT TANK 3'	RRB
1-09-09	REVISED PER EPA	TMC
12-05-08	REVISED PER EPA	CFE
9-26-08	REVISED PER CITY & OWNER	RRB
8-12-08	REISSUE	RRB
6-16-08	ORIGINAL ISSUE	RRB

DATE: 3-5-08
DRAWN BY: TMJ
CHD BY: RRB
DWG. NAME:08039-0-SWPPDET03
PATH:08039\LDDT\CONTROL\DWG
F.B.

KS Associates, Inc.
9560 Burns Rd, Suite 100
Elyria, Ohio 44035
Phone (440) 365-4730
Fax (440) 365-4790
mailroom@ksassoc.com
www.ksassoc.com
KS ASSOCIATES

SWPP DETAILS

EAST COLLEGE STREET PROJECT

PART OF ORIGINAL RUSSIA TOWNSHIP LOT No. 86
CITY OF OBERLIN, COUNTY OF LORAIN, STATE OF OHIO

SHEET 41 (SW-6) OF 42

JOB NO. 08039

R:\08000\08039\ldt\control\dwg\08039-M-SWPPDET03.dwg 4/24/2009 7:43:45 AM EDT