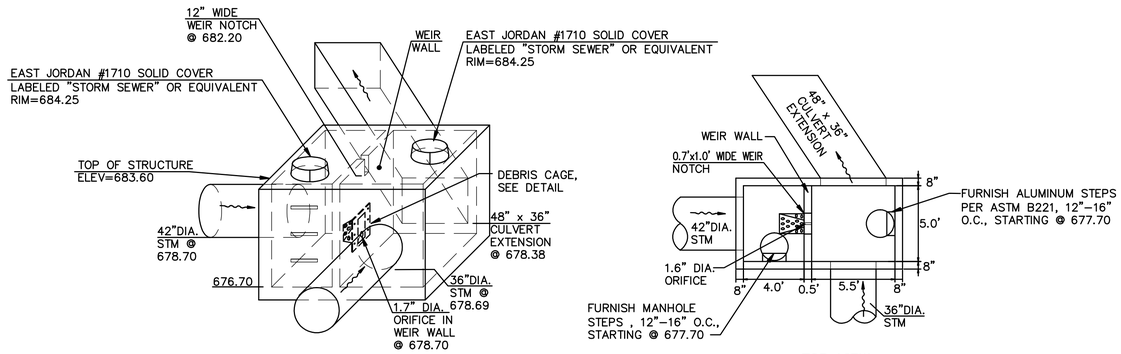

NOTE: ANY IMPROVEMENTS NOT FINISHED TO THIS OUTLET STRUCTURE SHALL BE COMPLETED WITH THIS PHASE OF WORK

EXISTING OUTLET STRUCTURE AT BOX CULVERT DETAIL

(NOT TO SCALE)

SEDIMENT TRAP (SCHOOLHOUSE)

SEDIMENT DRAINAGE AREA = 0.47 Acres
MINIMUM SEDIMENT STORAGE VOLUME = 1000 CF x DRAINAGE AREA
= 1000 CF x 0.47 AC.
= 470 CF = 0.0.10 Ac-Ft
STORAGE PROVIDED AT ELEV=684.00, WHICH IS 0.011 Ac-Ft

MINIMUM DEWATERING VOLUME = 1,800 CF x DRAINAGE AREA
= 1,800 CF x 0.47 AC.
= 846 CF = 0.019 Ac-Ft

MINIMUM TOTAL STORAGE VOLUME = 0.011 + 0.019 = 0.030 Ac-Ft
@ ELEV. = 685.03

ELEV. FT.	AREA SF.	VOLUME (AC-FT)	VOLUME Ac-Ft (TOTAL)
682.00	20	.000	.000
683.00	200	.002	.002
684.00	580	.009	.011
685.00	1049	.018	.029
686.00	1650	.031	.060

INSPECTION AND MAINTENANCE:

1. INSPECTION FREQUENCY SHALL BE IN ACCORDANCE WITH THE PERMIT. AT A MIN. ON A WEEKLY BASIS AND AFTER EVERY RUNOFF EVENT.

2. ESTABLISH AND MAINTAIN VEGETATIVE COVER AROUND TRAP.

3. INSPECT FOR STRUCTURAL SOUNDNESS AND REPAIR AS NECESSARY.

4. SEDIMENT SHOULD BE REMOVED AND THE TRAP RESTORED TO THE ORIGINAL DEPTH WHEN THE SEDIMENT HAS ACCUMULATED TO 40% THE DESIGN DEPTH OF THE TRAP. REMOVED SEDIMENT SHOULD BE SPREAD IN A SUITABLE AREA AND STABILIZED SO IT WILL NOT ERODE.

5. REMOVE TRASH, DEBRIS, AND WOODY GROWTH.

6. WHEN ALL UPSTREAM AREAS HAVE BEEN STABILIZED OR OTHER BMP'S HAVE BEEN IMPLEMENTED, DEWATER TRAP AND GRADE FOR PROPER RUN-OFF DRAINAGE.

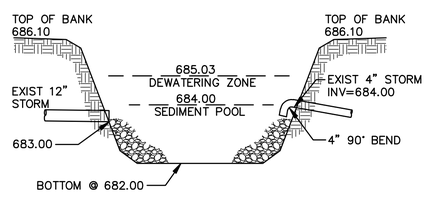

SECTION VIEW
(NOT TO SCALE)

SEDIMENT CONTROL DURING CONSTRUCTION FOR SEDIMENT TRAP #3 (SCHOOLHOUSE)

(NOT TO SCALE)

AFTER CONSTRUCTION (BY OWNER)

THE OWNER'S ASSOCIATION SHALL BE RESPONSIBLE TO INSPECT AND MAINTAIN THE STORMWATER MANAGEMENT BASIN AND VORTSENTRY WATER QUALITY UNIT.

THE OWNER'S ASSOCIATION SHALL BE RESPONSIBLE FOR PROVIDING INSPECTION RECORDS BY A QUALIFIED PERSON(S) TO THE CITY FOR THE PREVIOUS YEAR'S ROUTINE MAINTENANCE BY EVERY MAY 1ST (ONCE CONSTRUCTION IS COMPLETE). THE CITY MAY REQUEST INSPECTION AND MAINTENANCE RECORDS AT ANY TIME DURING THE YEAR.

IT IS RECOMMENDED THAT THE FOLLOWING ITEMS BE INCLUDED ON THE STORMWATER SITE INSPECTION FORMS:

1.) THE INSPECTION FOR SHALL NOTE THAT THE REVIEW IS FOR EITHER THE DETENTION SYSTEM, BIORETENTION AREA OR SAND FILTER SYSTEM.
2.) PROJECT NAME AND LOCATION
3.) DATE OF INSPECTION, INSPECTOR'S NAME, AFFILIATION, CONTACT INFORMATION AND QUALIFICATIONS
4.) WEATHER INFORMATION AT TIME OF INSPECTION INCLUDING PRECIPITAION, TEMPERATURE, ETC.
5.) IS THERE DEBRIS IN THIS AREA
6.) ARE THE PIPES, INLETS AND YARD DRAINS FREE OF DEBRIS
7.) DO THE PLANTS APPEAR HEALTHY
8.) ARE LAWN AREAS BEING MAINTAINED
9.) IS MULCH IN GOOD STANDING, DOES IT NEED REDRESSED
10.) ARE UPSTREAM DRAINAGE WAYS IN GOOD STANDING AND FREE OF DEBRIS
11.) IS MAINTENANCE REQUIRED
12.) DATE AND DETAILS OF MAINTENANCE PERFORMED

A. STORMWATER MANAGEMENT BASIN INSPECTION AND MAINTENANCE SCHEDULE

THE OWNER'S ASSOCIATION SHALL BE RESPONSIBLE TO MAINTAIN THE BASIN AS REQUIRED, AND SHALL ALSO CLEAN OUT THE BOTTOM OF THE OUTLET STRUCTURE WHEN IT BECOMES FILLED WITH DEBRIS AND SHALL DISPOSE OF THE SEDIMENT AT A STABILIZED LOCATION WHERE IT WILL NOT BE CARRIED OFF-SITE OR INTO A STORM SEWER BY RAIN FALL.

THE FOLLOWING INSPECTION AND MAINTENANCE IS REQUIRED BY THE OWNER AFTER ACCEPTANCE:

A. THE INLETS AND OUTLET SHALL BE INSPECTED MONTHLY, AND AFTER EVERY MAJOR STORM EVENTS TO ENSURE THEY ARE FREE FROM CLOGS. SEDIMENT AND DEBRIS SHALL BE REMOVED WHEN FOUND AND DISPOSED OF IN A LOCATION THAT WILL NOT ALLOW IT TO BE TRANSPORTED OFF-SITE VIA RAINFALL OR STORM SEWER.

B. GROUND COVER OR GRASS AROUND BASIN SHALL BE INSPECTED FOR UNIFORM VEGETATIVE COVERAGE AT LEAST ONCE A YEAR. GRASS OR GROUND COVER SHALL BE MAINTAINED BY REAPPLYING IT IN BARE SPOTS TO PRODUCE UNIFORM COVERAGE FOR THE ENTIRE AREA AROUND THE BASIN.

C. SIDE SLOPE COVER SHALL BE INSPECTED FOR EROSION AND UNIFORM VEGETATION COVERAGE AT LEAST TWICE A YEAR. VEGETATION SHALL BE MAINTAINED BY REAPPLYING IT IN BARE SPOTS TO PRODUCE UNIFORM COVERAGE FOR THE ENTIRE SLOPE.

D. AS A MINIMUM THE BASIN DEPTH SHALL BE INSPECTED ANNUALLY. BASIN SHALL BE DREDGED TO MAINTAIN A BOTTOM ELEVATION OF 679.00 OR 6.05 FEET DOWN FROM THE RIM OF THE OUTLET STRUCTURE.

B. SEDIMENT TANK AND SAND FILTER STRUCTURE INSPECTION AND MAINTENANCE SCHEDULE:

THIS SYSTEM IS NOT A PRE-MANUFACTURED SYSTEM BUT WAS SPECIFICALLY DESIGNED FOR THIS SITE. THE FOLLOWING INSPECTION AND MAINTENANCE GUIDELINES ARE INTERPRETATIONS FROM THE ODNR RAINWATER & LAND DEVELOPMENT MANUAL:

MONTHLY: REMOVE DEBRIS; CHECK FOR CLOGGING AND SEDIMENT ACCUMULATION ON THE FILTER SURFACE AND DIFFUSER PIPE; AND CHECK SEDIMENT CHAMBER IF IT IS MORE THAN 1/2 FULL OF SEDIMENT- CLEAN OUT WITH VACUUM TRUCK OR OTHER MEANS.

SEMI-ANNUALLY: ALL OF THE ABOVE PLUS CHECK FOR STRUCTURAL DAMAGE AND LEAKAGE; REPAIR ANY GRATES AND MECHANICS AS NEEDED; REPLENISH MATERIAL TO ENSURE FULL 17" DEPTH.

ANNUAL OR AFTER MAJOR STORM EVENTS: ALL OF THE ABOVE AND INSPECT SPILLWAYS AND REPAIR AS NECESSARY. ENSURE PROPER DRAINAGE IS OCCURRING OR SEE NOTE BELOW.

IF AT ANY TIME STANDING WATER IS OCCURRING, RAKE THE TOP OF THE SURFACE, IF THIS DOES NOT AIDE IN WATER DRAW-DOWN REMOVE TOP 6" OF SAND (WITH VACUUM TRUCK OR OTHER MEANS), RAKE REMAINING SAND AND REPLENISH. OTHERWISE COMPLETE REMOVAL IS NECESSARY AND REPLENISH WITH CLEAN/WASHED CONCENTRIC SAND AT 17" DEPTH.

REVISIONS

DATE	DESCRIPTION	BY
12-22-09	OEPA REVISIONS	CFE
11-04-09	BUILDING REVISIONS AND CITY COMMENTS	CFE
9-29-09	BLDG REVISED AND CITY COMMENTS	CFE
08-31-09	ORIGINAL ISSUE	CFE

DATE: 08-21-09
DRAWN BY: CCC
CH'D BY: CFE
DWG. NAME: 09217-M-SWPPP09
PATH: 09217\LDC09\SHEETS
F.B.

KS Associates, Inc.
260 Burns Road, Suite 100
Elyria, OH 44035
P 440 365 4730
F 440 365 4790
www.ksassociates.com
KS ASSOCIATES

SWPPP NOTES AND DETAILS
CITY CENTRE 2
PHASE 2
CITY OF AVON
COUNTY OF LORAIN, STATE OF OHIO

SHEET SW9 OF 29

JOB NO. 09217

R:\09000\09217\LDC09\CONTROL\dwg\090904-SHEETS\09217-M-SWPPP09.dwg 9/29/2009 2:40:34 PM EDT