BP –HUSKY REFINING LLC
TOLEDO REFINERY

TOLEDO FEEDSTOCK OPTIMIZATION PROJECT

PERMIT-TO-INSTALL APPLICATION

Prepared for:

BP - Husky Refining LLC

Toledo Refinery
4001 Cedar Point Road
Oregon, Ohio 43616

Prepared by:

URS Corporation
Waterfront Plaza Tower One
325 West Main Street Suite 1200
Louisville, Kentucky 40202-4251

URS Project No. 41917214

October 19, 2012

BP – HUSKY REFINING LLC TOLEDO REFINERY
TOLEDO FEESTOCK OPTIMIZATION (TFO) PROJECT
PERMIT-TO-INSTALL APPLICATION

Prepared For:

Allen Ellett
BP - Husky Refining LLC.
Toledo Refinery
4001 Cedar Point Road
Oregon, Ohio 43616
Ph. 419-697-6064

Prepared by:

URS Corporation
Waterfront Plaza Tower One
325 West Main Street Suite 1200
Louisville, Kentucky 40202-4251
Ph. 502-569-2301

URS Project No. 41917214

This document was prepared and reviewed by the following key URS Personnel:

Project Manager _____ Date: October 19, 2012
Mary Stuart Peace, P.E.

Principal In Charge _____ Date: October 19, 2012
Todd P. Royer, P.E.

Table of Contents

Page

EXECUTIVE SUMMARY 1

1.0 PROJECT DESCRIPTION 1-1

1.1 Crude/Vacuum 1 Unit & Heaters (P011, B015, B031) 1-1
1.2 Coker 3 Process Unit (P036), Coker 3 heater (B032) 1-1
1.3 ADHT Process Unit and Heater (P028, B029) 1-2
1.4 BGOT Process Unit (P029) 1-3
1.5 Sewer/Waste Water Treatment System 1-3
1.6 Shutdown/Replaced Emission Units 1-3
1.7 Other Affected but Unmodified Emission Units 1-3
1.7.1 Coke Handling (F002, F005, F006) 1-4
1.7.2 SRUs (P009, P037) 1-4
1.7.3 Alstom Boilers (B034, B035) 1-4
1.7.4 Refinery Hydrocarbon Flare System 1-4
1.7.5 Tankage 1-5
1.7.6 Cooling Tower 1-5

2.0 EMISSIONS SUMMARY 2-1

2.1 Projected Emissions from New Emission Units 2-1
New Crude 1 and Vacuum 1 Heaters 2-1
2.2 Emissions from the Shutdown Emission Units 2-2
Existing Crude 1 (B015) and Vacuum 1 (B031) Heaters 2-2
2.3 Projected Emissions from Modified Emission Units 2-2
2.3.1 Coker 3 (P036) Coke Drum Venting/Cutting/Draining 2-2
2.3.2 Particulate emissions from Coke handling (F005), Crushing (F006), and Temporary Coke Pile (F002) 2-3
2.3.3 Fugitive Equipment Leak Emissions from Coker 3 (P036), CV1 (P011), and ADHT (P028) Units 2-5
2.3.4 Sewer/WWT (P025) 2-6
2.4 Projected Emission Increases from Unmodified but Affected Units 2-6
2.4.1 Coker 3 (B032) & ADHT (B029) heaters 2-6
2.4.2 Increase in Steam Demand (B034 & B035 – East & West Alstom Boilers) 2-7
2.4.3 Sulfur Recovery Units: SRU1 (P009) and SRU2&3 (P037) 2-7
2.4.4 Tankage 2-8
2.4.6 Cooling Tower 2-9

3.0 APPLICABLE REGULATIONS 3-1

3.1 NSPS Subpart Ja 3-1
3.1.1 New Heaters Subject to NSPS Ja 3-1
3.1.3 Coker 3 Process Unit (P036) Subject to NSPS Ja 3-2
3.2 NSPS Subpart GGGa - Standards for Equipment Leaks 3-2

3.3 NSPS Subpart NNN - Standards of Performance for Volatile Organic Compound (VOC) Emissions from Synthetic Organic Chemical Manufacturing Industry (SOCMI) Distillation Operations 3-3
3.4 40 CFR Subpart CC—National Emission Standards for Hazardous Air Pollutants from Petroleum Refineries 3-3
3.5 40 CFR Subpart DDDDD — National Emission Standards for Hazardous Air Pollutants for Major Sources: Industrial, Commercial, and Institutional Boilers and Process Heaters 3-3
3.6 40 CFR Part 51 and 52 New Source Review and Prevention of Significant Deterioration (NSR/PSD)....3-4
3.7 Ohio Permitting Regulations 3-5
3.7.1 OAC rule 3745-31-05 Ohio Best Available Technology (BAT) 3-5
3.7.2 OAC rule 3745-21-09(T) Leaks from petroleum refinery equipment .3-5
3.7.3 OAC rule 3745-109 (Clean Air Interstate Rule) 3-6
3.7.5 OAC Rule 3745-114 (Air Toxics)....3-6

4.0 NEW SOURCE REVIEW FOR ATTAINMENT AND NON-ATTAINMENT AREAS (NSR/PSD)....4-8

4.1 Contemporaneous Increases and Decreases 4-10
4.2 Project Creditable SO_2 Emissions Decreases from Fuel Gas TRS Reduction (Modified Coker Gas Plant) 4-13
4.3 Other Proposed Permit Condition Changes 4-14

5.0 BEST AVAILABLE TECHNOLOGY (BAT) 5-1

5.1 BAT for NO_x from Refinery Heaters....5-3
Step 1 – Identify All Control Technologies 5-3
A description of each technology and its potential application to the proposed heaters is included in the following section. 5-6
Step 2 – Eliminate Technically Infeasible Options 5-6
Step 3 – Rank Remaining Control Technologies by Control Effectiveness 5-8
Step 4 - Evaluate Most Effective Controls and Document Results 5-9
Step 5 – Select BAT for NO_x Control....5-11
5.2 BAT for SO_2 from Refinery Heaters 5-11
5.3 BAT for CO from Refinery Heaters 5-13
5.4 BAT for VOC from Refinery Heaters 5-16
5.5 BAT for $PM/PM_{10}/PM_{2.5}$ from Refinery Heaters 5-16
5.6 BAT for VOC from Coker 3 Coke Drum Vent....5-16
5.7 BAT for VOC from Fugitive Equipment Leaks (Coker 3, CV1, AHDT Units) 5-17

6.0 PERMIT APPLICATION FORMS 6-1

Appendices

Appendix A Emission Calculations

Appendix B Air Quality Analysis

Appendix C BAT Cost Calculations

Appendix D New Source Review Issues for Project Aggregation

Appendix E GHG BACT Analysis

Appendix F Refinery Fuel Gas Total Reduced Sulfur (TRS) Data

Appendix G Proposed Interim Group SO_2 Limit

List of Acronyms

ADHT	A-Diesel Hydrotreater (a refinery process unit)
AP-42	Compilation of Air Pollutant Emission Factors, Volume 1: Stationary Point and Area Sources
BACT	Best Available Control Technology
BAT	Best Available Technology
bbl	barrels
BGOT	B-Gas Oil Hydrotreater (a refinery process unit)
CEM	Continuous emissions monitor
CFR	Code of Federal Regulations
FCCU	Fluid Catalytic Cracking Unit
HAP	Hazardous air pollutant
hr	hour
kbpd	kilo (thousand) barrels per day
lb	pounds
LAER	Lowest Achievable Emission Rate
LDAR	leak detection and repair
MACT	Maximum Available Control Technology (40 CFR Part 63)
NHT	Naphtha Hydrotreater (a refinery process unit)
NSPS	New Source Performance Standard (40 CFR Part 60)
NSR	New Source Review
OEPA	Ohio Environmental Protection Agency
PM	Particulate Matter
PSD	Prevention of Significant Deterioration
PTI	Permit To Install
RACT	Reasonably Available Control Technology
TAN	Total Acid Number (measure of acidity of crude oil)
tpy	tons per year
TFO	Toledo Feedstock Optimization
U.S. EPA	United States Environmental Protection Agency
VOC	volatile organic compounds

List of Acronyms on Flow Diagram

Process Units

ADHT	A-Diesel Hydrotreater Unit
BGOT	B-Gas Oil Hydrotreater Unit
CV1	Crude Vacuum 1 Unit
CV2	Crude Vacuum 2 Unit
CKR	Coker Unit
NHT	Naphtha Hydrotreater Unit
FCC	Fluid Catalytic Cracker Unit
ALKY	Alkylation Unit
IsoCrkr	IsoCracker Unit
CCR Ref	Continuous Catalytic Reformer

Process Streams

LPG	Liquid Petroleum Gas
HN	Heavy Naphtha
LGO	Light Gas Oil
HGO	Heavy Gas Oil
VGO	Virgin Gas Oil
LVGO	Light Virgin Gas Oil
IVGO	Intermediate Virgin Gas Oil
HVGO	Heavy Virgin Gas Oil
WW	Water White
VR	Vacuum Residuum
ALK	Alkylate
Kero	Kerosene
Naph	Naphtha
CSD	Coker Distillate
LCN	Light Cat Naphtha
MCN	Medium Cat Naphtha
HCN	Heavy Cat Naphtha
DSL	Diesel
DCO	Decant Oil
SW	Sour Water
REF	Reformate
H2	Hydrogen
C3, C4, etc	Propane, Butane, etc.
iC4	Isobutane

Executive Summary

BP-Husky Refining LLC (BPH) Toledo Refinery is proposing some modifications to the existing refinery to increase the flexibility to process a higher percentage of crude oil feedstocks similar to that which will soon be available from BPH's Sunrise oil field development in Canada. This project is called the Toledo Feedstock Optimization (TFO) Project.

This project will not increase the BPH refinery's overall crude capacity. Nor is it intended to increase the amount of Canadian crudes relative to what is currently being processed at the Refinery. TFO simply allows the flexibility to substitute BPH's own Sunrise Canadian crude or other somewhat more corrosive crude oil feedstocks for the Canadian crude oils being processed today.

The TFO project will replace the existing heaters in the Crude Vacuum 1 process unit (P011) and upgrade the metallurgy of that unit. It also includes changes to the Coker 3 process unit (P036) to reduce the coke drum cycle time, and a modification to the Coker gas plant to improve light ends recovery and reduce total sulfur compounds in the fuel gas that is combusted in the refinery. Finally, minor piping changes will be required in the following process units: Crude Vac 1 (P011); A-Diesel Hydrotreater (ADHT) (P028); B-Gas Oil Hydrotreater (BGOT) (P029); and Coker 3 (P036). The proposed project will not significantly increase emissions of any conventional pollutant when considered with contemporaneous and creditable increases and decreases at the facility. The project will, however, trigger Prevention of Significant Deterioration (PSD) pre-construction review for GHGs. A PSD BACT evaluation for GHGs is included in Appendix E of this application.

Further details of the project description are provided in Section 1 of this permit application. Overall project emissions are summarized in Section 2. Applicable regulations and PSD discussion are described in Sections 3 and 4 respectively. The Ohio BAT Analysis is included as Section 5 and GHG BACT is included in Appendix E. Details of emissions calculations are included as Appendix A. Additional appendices contain other supporting information.

1.0 Project Description

This TFO Project application is for a permit to install and operate (PTIO) to allow the BPH Toledo Refinery to install and operate the new and modified existing equipment to allow the flexibility to process crude oils originating in the BPH Sunrise fields in Canada, or other crude oils having similar characteristics. In addition to the new and modified equipment, some downstream process units and other refinery infrastructure units, although not physically modified, will have increased utilization. Each of these proposed changes and potential impacts are described in detail below.

A block process flow diagram of the refinery showing the major components of the project is shown as Figure 1-1 at the end of this section.

1.1 Crude/Vacuum 1 Unit & Heaters (P011, B015, B031)

Processing higher quantities of Sunrise crudes will require metallurgical upgrades in several portions of the Crude/Vacuum 1 (CV1) process unit. BPH proposes to replace the Crude 1 and Vacuum 1 heaters (B015 & B031) and make metallurgy improvements to the distillation towers and some piping that will enable the CV1 (P011) Unit to process the new somewhat more corrosive crude oils. These improvements will include two new Crude 1 heaters with a combined rating of 450 MMBtu/hr and a new Vacuum 1 Heater rated at 150 MMBtu/hr. In addition, the project will add heat exchangers and new desalters to improve unit operability and reliability with the new crudes.

Emissions impacts from these changes to the CV1 unit are:

- Potential increase in fugitive emissions from piping components; and
- Slight net increase in emissions of NSR regulated pollutants resulting from the shutdown of Crude 1 heater (B015) and Vacuum 1 heater (B031); and the start-up of the replacements for those heaters,.

1.2 Coker 3 Process Unit (P036), Coker 3 heater (B032)

BPH will also make physical changes to the Coker 3 process unit (P036). Changes to the coke drum blowdown system will decrease the cycle time from approximately 16.5 hours to 14 hours so that more coker feed can be processed with the existing system. While short-term emissions will not increase, annual emissions from coke drum venting and cutting will increase due to a greater number of cycles per year. The increased

throughput capacity of the Coker 3 unit is expected to be nominally 33 thousand barrels per day (KB/D), which is an increase from a current capacity of approximately 28 KB/D. The project also may include adding an additional coke cutting water tank to increase storage capacity for water used to hydroblast the coke from the coke drum. This tank would not increase emissions.

The Coker 3 Heater (B032) capacity and burner characteristics will not be affected by these changes. While the annual utilization of this heater may increase because of higher Coker 3 feed rates, the heater will not be physically modified and its maximum potential or allowable emissions will not increase. Therefore, the Coker 3 Heater (B032) is not considered to be "modified" in the context of NSPS, BAT or BACT.

Modifications to the existing Coker gas plant will improve separation and recovery of light hydrocarbons and organic sulfur compounds from both of the existing Coker units (Coker 2 (P017) and Coker 3 (P036)) before the gas is sent to the refinery fuel gas system. These changes will reduce the concentration of organic sulfur compounds in the refinery fuel gas system and will result in a decrease in SO_2 emissions from many refinery heaters. As discussed in Section 4.3 of this permit application, BPH is requesting new lower enforceable permit limits on SO_2 from several of the refinery's heaters consistent with this planned improved SO_2 performance.

Emissions impacts from these changes to the Coker 3 unit (P036) are:

- Potential increase in fugitive emissions from new piping components;
- Increased actual Coker 3 heater firing (B032);
- Increased coke drum venting and cutting emissions; and
- Decreased SO_2 from refinery heaters discussed separately.

1.3 ADHT Process Unit and Heater (P028, B029)

The "A" Diesel Hydrotreater (ADHT) process unit (P028) will be modified to add more heat exchangers, amine contactors, and wash water pumps. These changes will allow more extensive hydrotreating of the diesel needed due to higher concentrations of ammonia, nitrogen and nitrogen compounds in the new crudes. The capacity of the unit will not change as a result of these changes. The unit is currently capable of processing approximately 21 KB/D. The small ADHT (B029) heater will not be modified. Unit feed rates and heater firing are not expected to increase appreciably due to this project.

However, for conservatism, heater firing rates are assumed to increase to its permitted allowable limit.

The possible emissions impacts from these changes are:

- Potential increase in fugitive emissions from new piping components; and
- Potential increased existing ADHT heater (B029) firing.

1.4 BGOT Process Unit (P029)

The B Gas Oil Hydrotreater (BGOT) Unit (P029) will have new wash water pumps installed to allow higher wash water for use with the somewhat more corrosive crude oil feedstocks from the Sunrise Oil fields in Canada. No emission impacts result from this change. The new wash water pump piping will not contain VOC and will not be a source of increased fugitive emissions. The capacity of the BGOT unit will not be changed in any way. Neither will the TFO project increase the actual process feed rates or heater firing.

1.5 Sewer/Waste Water Treatment System

A few new oily water sewer drain systems will be installed in some of the areas impacted by the above described changes. The emissions from these have been included in the project increases.

1.6 Shutdown/Replaced Emission Units

As mentioned previously, the existing Crude 1 Heater (B015)(325 MMBtu/hr) and the Vacuum 1 Heater (B031)(130 MMBtu/hr) will be shutdown/replaced as part of the proposed TFO project. Each of these heaters will be replaced with new state-of-the-art refinery process heaters in the same service providing the same function as the existing heaters.

1.7 Other Affected but Unmodified Emission Units

The project will result in increased utilization of several other emission units at the refinery. These units are not being physically modified or undergoing a change in the method of operation as a result of this project. The proposed project may, however, increase utilization and emissions due to the alternate crude feed material. These impacts are discussed in the following sections.

1.7.1 Coke Handling (F002, F005, F006)

There will not be any physical changes made to the coke handling system that would result in emission increases; however, the amount of coke processed through the handling system is expected to increase due to the reduced cycle time in Coker 3. This increase in unit throughput will increase coke production rate which increases the particulate emissions from the downstream Coke Crushing (F006), Handling (F005) and potentially the temporary coke storage pile (F002) operations.

1.7.2 SRUs (P009, P037)

The Sulfur Recovery Units (SRUs) will not be modified; however, the other modifications in the TFO project allow the refinery to process additional types of crudes that could potentially increase the sulfur load to the SRUs. Since the TFO project does not include any modifications to the SRUs, and because they are already running close to their capacity, emissions increases from possible increased sulfur load should be modest. Potential SRU emission increases are estimated by assuming their loading is increased to the SRUs unit's current capacity. BPH proposes a new annual SO_2 limit on the combined emissions of both SRU units that represents the maximum potential emissions at full load. The difference between this limit and the SRU's baseline actual emissions is included in the estimated project increases.

1.7.3 Alstom Boilers (B034, B035)

The TFO project is expected to result in a modest increase in steam demand, predominantly from increased steam needed by the modified Coker gas plant. Accordingly, the emissions resulting from additional firing of the refinery boilers have been included in the estimated project increases.

1.7.4 Refinery Hydrocarbon Flare System

Flaring emissions at the refinery will not increase as a result of the TFO project. In fact, flaring is expected to be reduced, although credit is not being taken for this reduction. The primary project scope element associated with flaring is a change to the Coke drum blowdown process.

During the normal coking operation, the gas from the coke drums is routed to the Coker Bubble Tower for capture and treatment before being introduced to the refinery fuel gas system. When a coke drum is taken offline for coke removal, the current practice is to route the gas from the coke drum to the flare gas recovery compressors where the gas is

captured and routed through the Coker Wet Gas Compressor before being introduced into the fuel gas system. This practice begins shortly after the steaming of the coke drum commences, when the drum pressure is approximately 45 psig, and continues until the drum is depressured to the point where it can be opened to the atmosphere, usually between 3 and 4 psig. Utilization of the flare gas recovery system to depressure the coke drum occurs for approximately four hours and repeats during each coke drum cycle.

The TFO project will add additional equipment and change the routing of the coker blowdown in order to divert Coker blowdown gas from the flare gas recovery system and ensure that flare emissions will not increase as a result of the TFO project. Under the new process configuration, the coke drums initially will be depressured through steam eductors directly to the Coker Wet Gas Compressor, bypassing the flare gas recovery compressors. By utilizing this alternative processing route for the coker blowdown gas, BPH will free up a significant amount of the available flare gas recovery capability during these blowdown periods. This process change will enable the existing flare gas recovery system to recover additional gas from the flare header at times when the gas otherwise may have been vented to the flare. In this manner, the proposed change to the coker blowdown process will reduce flare emissions. Although the vacuum eductors will be the primary means to reduce the pressure in the coke drums, BPH will retain the blowdown connection to the flare gas recovery compressor suction.

1.7.5 Tankage

A slight increase in the throughput to diesel storage tanks has been estimated to account for potential diesel production increases related to the project.

1.7.6 Cooling Tower

With the proposed changes at Coker 3, it is anticipated that additional cooling water circulation may be needed, especially in the hot summer months. An incremental increase of 10,000 gallons per minute of circulation rate in the existing cooling towers is conservatively assumed and results in a small amount of additional particulate and VOC emissions.

Figure 1-1

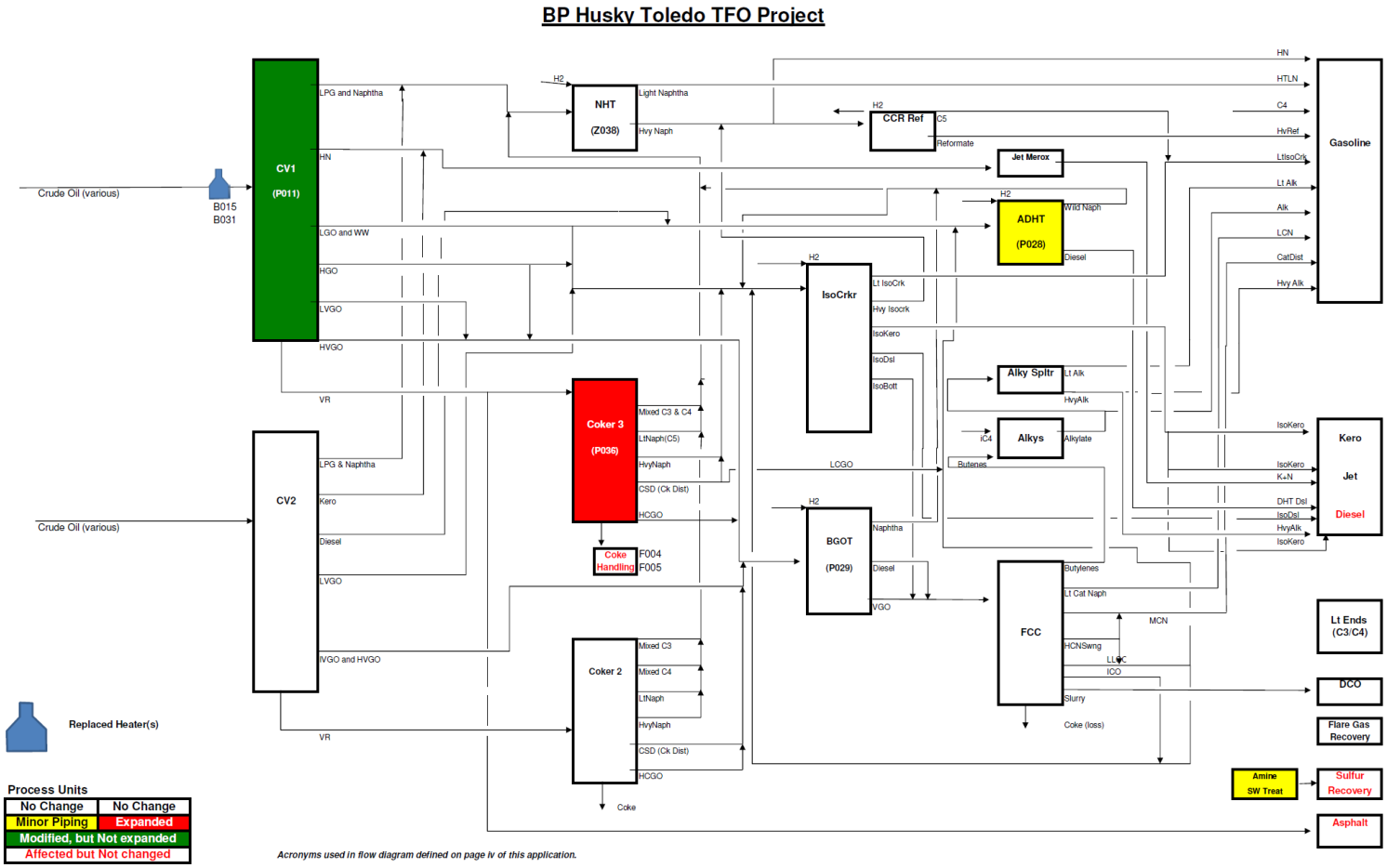
BP Husky Toledo TFO Project
Crude Oil (various)
B015
B031
CV1
(P011)
LPG and Naphtha
HN
LGO and WW
HGO
LVGO
HVGO
VR
CV2
LPG & Naphtha
Kero
Diesel
LVGO
HVGO and HVGO
VR
Crude Oil (various)
NHT
(Z038)
H2
Light Naphtha
Hvy Naph
CCR Ref
C5
Reformate
Jet Merox
ADHT
(P028)
Wild Naph
Diesel
IsoCrkr
Lt IsoCrk
Hvy Isocrk
IsoKero
IsoDsl
IsoBott
Alky Spltr
Lt Alk
HvyAlk
Alkys
iC4
Alkylate
Butenes
Coker 3
(P036)
Mixed C3 & C4
LtNaph(C5)
HvyNaph
CSD (Ck Dist)
HCGO
Coke Handling
F004
F005
LOGO
BGOT
(P029)
Naphtha
Diesel
VGO
FCC
Butylenes
Lt Cat Naph
MCN
HCNSwng
LLCC
ICO
Slurry
Coke (loss)
Coker 2
Mixed C3
Mixed C4
LtNaph
HvyNaph
CSD (Ck Dist)
HCGO
Coke
HN
HTLN
C4
HvRef
LtIsoCrk
Lt Alk
Alk
LCN
CatDist
Hvy Alk
Gasoline
IsoKero
IsoKero
K+N
DHT Dsl
IsoDsl
HvyAlk
IsoKero
Kero
Jet
Diesel
Lt Ends
(C3/C4)
DCO
Flare Gas
Recovery
Amine
SW Treat
Sulfur
Recovery
Asphalt
Replaced Heater(s)
Process Units
No Change
No Change
Minor Piping
Expanded
Modified, but Not expanded
Affected but Not changed
Acronyms used in flow diagram defined on page iv of this application.

2.0 Emissions Summary

This section provides a brief summary of the basis of the emissions calculations. Detailed calculations are provided in Appendix A of this application. Also, a table summarizing all the emissions increases and decreases resulting from the TFO project is presented at the end of Section 2 in Table 2-1. Past actual baseline emissions for existing affected emission units are based on the 24 month baseline period of calendar years 2004 and 2005.

2.1 Projected Emissions from New Emission Units

New Crude 1 and Vacuum 1 Heaters

There are three new heaters included in the TFO project scope. The existing Crude 1 heater (B015) will be replaced by two new 225 MMBtu/hr (HHV) heaters. The existing Vacuum 1 heater (B031) will be replaced with a new Vacuum 1 heater rated at 150 MMBtu/hr (HHV). Project emissions from these heaters are based on their maximum emissions potential at their design nameplate capacity of each heater in MMBtu/hr. EPA AP-42 factors from Chapter 1.4, Natural Gas Combustion, July 1998 version were used to estimate emissions of VOC, $PM/PM_{10}/PM_{2.5}$, lead, and combustion HAPs. Emissions of Green House Gases (GHG) expressed as CO_2e were estimated based on site-specific fuel carbon content and the methodology from the Mandatory GHG Rule, 40 CFR Part 98 Subpart C. Emissions of CO, NO_x, SO_2, and H_2SO_4 were estimated using the following assumptions:

- Conservative engineering estimate of 0.06 lb CO/MMBtu (approx. 84 ppm_{vd} CO @ 3% O_2) – based on the BAT determination in Section 5 of this application;
- NO_x emissions are based on NSPS Ja NO_x requirement of 0.04 lb/MMBtu NO_x which is also determined to be BAT (see Section 5 of this application);
- Annual SO_2 emissions (tons/yr) are based on an annual average concentration of 70 ppm_v total sulfur in refinery fuel gas.
- H_2SO_4 is based on 3% of SO_2 emissions converting to SO_3 and total conversion of SO_3 to H_2SO_4.

Note: The above specified basis for future maximum annual SO_2 emission from these heaters represents the anticipated maximum sulfur levels after the TFO project is fully implemented. However, due to practical project execution constraints, implementation of the planned refinery fuel gas sulfur improvements cannot be fully in place immediately upon the startup of the first TFO scope items that may increase SO_2 emissions. During the interim period between TFO startup and completion of those improvements, notably the modified Coker gas plant, BPH proposes an interim group SO_2 emission limits and other requirements that will assure that no significant net SO_2 emissions increase will occur. Details of the proposed interim SO_2 group limit are discussed in Section 4.3 (PSD netting) and Appendix G. This is also applicable to the other project affected process heater SO_2 emissions listed in this application.

2.2 Emissions from the Shutdown Emission Units

Existing Crude 1 (B015) and Vacuum 1 (B031) Heaters

The amount of the creditable emissions decrease for the shutdown of these heaters was estimated using the actual firing rate during the baseline period (2004-2005) and AP-42 emission factors for CO, VOC and $PM_{10}/PM_{2.5}$. For NO_x emissions, stack test data was available and was used for the Crude 1 heater (B015). No stack testing has been performed on the smaller Vacuum 1 heater (B031), so the NO_x emission factor specified for low NO_x burners in the compliance determination for compliance with the NO_x limit for these heaters in the PTI 04-0959 issued 5/30/2006 and the Title V was used. That NO_x factor (0.07 lb NO_x/MMBtu) is consistent with low NO_x burner performance for the vintage of this heater's burners. Tested recent actual total sulfur composition of the BPH refinery fuel gas was used to estimate past actual SO_2 emissions.

2.3 Projected Emissions from Modified Emission Units

2.3.1 Coker 3 (P036) Coke Drum Venting/Cutting/Draining

There are three batch steps that can generate emissions from the delayed coking units; venting, cutting, and draining. During the delayed coker operating cycle, the vast majority of the vapors from the coke drum are routed to a closed blowdown system with no emissions.

The first emissions event from the coke drums occurs when the coke drum is vented to the atmosphere after the coke drum is depressured to its set point. At this point,

residual vapors from the coke drum are released to the atmosphere to allow the drum to be opened for coke removal. The amount of gas vented from the delayed coking unit during this final depressurization step has been estimated using an enthalpy balance and the resulting emissions are calculated based on the concentration of each pollutant measured during the July 2011 stack test of the BPH Coker 3 unit (particulate, CH_4, CO, VOC, H_2S). The size of the drums, mass of coke, the resulting void space in the drums, and temperature and pressure at venting were all used to estimate the total flow rate of the vented gas per venting event. Past actual baseline emissions are estimated based on the actual number of venting events (drum cycles) in the baseline period and assumed venting at 3 psig (the average past venting pressure). Future emissions are based on a new coke drum cycle of 14 hrs, resulting in 626 venting events per year (8760 hrs/yr divided by 14 hrs per cycle) and venting at a new lower pressure of 2 psig. BPH is requesting an enforceable requirement to reduce the Coker 3 drum pressure to not more than 2 psig before venting to the atmosphere to satisfy BAT.

The next step in the de-coking process involves removing the coke from the drums using a high pressure water stream. Coke cutting emissions of VOC, H_2S, CO, CH_4, and CO_2 are estimated using an enthalpy balance to calculate the amount of water that is vaporized based on the heat contained in the coke. Emissions are estimated based on the concentration of constituents present.

Lastly, emissions are calculated from the evaporation of trace VOC and H_2S in the cutting water after it drains from the coke drums. These estimates are based on VOC and H_2S concentration data obtained at Toledo and a mass balance of water through the process.

2.3.2 Particulate emissions from Coke handling (F005), Crushing (F006), and Temporary Coke Pile (F002)

The changes planned at the Coker 3 (P036) process unit are anticipated to increase petroleum coke production. An increase in coke production could cause an increase in particulate emissions from the downstream processes from Coke Handling (F005), Coke Crushing (F006), and the temporary Coke Storage Piles (F002) at the refinery. Future potential emissions are based on an increase of coke production to a new rate of 2300 ton per day, which is significantly above current coke production rates but it is consistent with the throughput used as the basis for the existing allowable emissions

limits from these units established in PTI 04-01471 (Delta Valve permit). Estimated emissions occur from several steps in the handling process as discussed below.

The coke handling emissions (F005) include coke that has been removed from the Coke drums and forms a pile in the coke pit. Wind erosion from the pit coke pile is estimated using Equation 4 from Section 2.1.2 (Aggregate Storage Piles) of the RACM document. No control efficiency credit for the partial enclosure of the pit is assumed in the calculation. All of the coke is removed from the pile with a clamshell crane and dropped into the inlet chute of a crusher. Emissions from this transfer operation are estimated using the equation from AP-42 Section 13.2.4.3 (11/06) for aggregate drop operations. Additionally, it is assumed that 25% of the coke is re-handled once to manage the pile (i.e.; one additional drop operation). These operations take place in the pit, but no control credit is taken for the partial enclosure of the pit. Dust generated by movement of the clamshell crane around the pit to access all the coke has been estimated using AP-42 Section 13.2.2 (11/06) for vehicle traffic on unpaved surfaces at industrial sites.

The coke crusher (F006) is assumed to process 100% of the coke production from Coker 3. The crushing operation takes place inside an enclosed crusher. Emissions from coke crushing are based on the factor for the primary crushing of coal from Table 2.19-2 of Ohio EPA's Reasonably Available Control Measures for Fugitive Dust document (August 1983, page 2-431) and an estimated 70% control for the process enclosure.

From the crusher, the coke is dropped onto a conveyor belt which transports it to an offsite customer (Toledo Edison who operates a coke fired boiler near the refinery.) There are two drop operations (transfer points) on the conveyor, one loading it onto the conveyor and one midway along the conveyor route. These emissions are part of the handling operations (F005) and are estimated using the equation from AP-42 Section 13.2.4.3 (11/06) for drop operations. The conveyor and drop points are partially enclosed and a control effectiveness of 70% has been assumed.

The process steps described above represent the normal handling and crushing processes for Coker 3 coke. Occasionally, due to off spec product, conveyor downtime or operating problems at Toledo Edison, it is necessary to divert some of the coke production to a temporary storage pile (F002). Emissions from this occasional activity

are calculated assuming that 5% of the Coker 3 coke requires these additional/alternative handling steps.

The coke which is transported to the temporary pile is loaded by the clamshell crane into haul trucks. The emissions from this loading are already covered by the estimated emissions from assuming all coke is loaded into the crusher inlet chute because all of the coke goes one place or the other. Both activities represent uncontrolled drop operations with equivalent emissions.

The roadway dust emitted by the haul truck traffic to and from the pile is estimated using AP-42 Section 13.2.1 (1/11) for vehicle traffic on paved surfaces at industrial sites. No natural mitigation or additional control efficiency is assumed. Emissions from the roadway dust from movement of a front-end loader used to manage the temporary storage pile is estimated using AP-42 Section 13.2.2 (11/06) for vehicle traffic on unpaved surfaces at industrial sites.

Finally, emissions from wind erosion of material in the temporary coke storage pile are estimated using Equation 4 from Section 2.1.2 (Aggregate Storage Piles) of the RACM document taking no credit for any controls. Load into and out of the temporary storage pile is estimated using the equation from AP-42 Section 13.2.4.3 (11/06) for aggregate drop operations. Details of the coke handling, coke crushing, and temporary coke storage pile emissions are included in Appendix A.

2.3.3 Fugitive Equipment Leak Emissions from Coker 3 (P036), CV1 (P011), and ADHT (P028) Units

Fugitive emissions from piping component leakage are estimating using EPA correlation equations for monitored equipment and average leak factors for unmonitored equipment from the EPA Protocol document EPA-453/R-95-017, November 1995 (EPA Protocol) for refineries. Correlation equations use an assumed leak rate based on past experience at the BPH Toledo refinery which has an existing Leak Detection and Repair (LDAR) program in place. New piping component counts are estimated from preliminary piping and instrumentation drawings (PIDs) for the new equipment or for similar processes. VOC estimates assume that piping contains 100% VOC. These are conservative estimates since BPH plans on using new valves and packing that are low leaking provided they are commercially available.

The only fugitive equipment leaks of GHG emissions will be methane component of the new fugitive leaks from the light ends fractionation equipment in the modified Coker gas plant. GHG emissions are estimated from this equipment assuming the piping contains 32.8 weight % methane which is an engineering estimate of the maximum methane content of the process streams in that equipment. GHG emissions from fugitive leaks for the other TFO piping changes are insignificant because the other modified piping will not contain significant quantities of GHGs. The modified piping in other parts of the project contains mainly crude oil, distillate, naphtha, gas oil and similar non-GHG hydrocarbons.

2.3.4 Sewer/WWT (P025)

The TFO project scope includes some new or modified individual drain systems. The design of these new components will be controlled to meet 40 CFR 60, Subpart QQQ control requirements. Emissions from the new applicable components with the potential of VOC emissions are estimated using AP-42 factors from Chapter 5.1 and factors presented in the NSPS QQQ Background Information Document.

2.4 Projected Emission Increases from Unmodified but Affected Units

Emissions from existing process units that are ***not modified***, but may be affected (i.e.; increased utilization) by the proposed changes have been estimated.

2.4.1 Coker 3 (B032) & ADHT (B029) heaters

Project scope includes changes at the Coker 3 and ADHT process units that could cause increased firing rates over past actual at these heaters. Future potential emissions from these heaters are based on the nameplate firing capacity of each heater in MMBtu/hr. EPA AP-42 factors from Chapter 1.4, Natural Gas Combustion, July 1998 version were used to estimate emissions of VOC, $PM/PM_{10}/PM_{2.5}$, CO, Lead, and combustion HAPs. Emissions of Green House Gases (GHG) expressed as CO_2e were estimated based on refinery site-specific fuel carbon content and the methodology outlined in EPA's Mandatory GHG Rule from 40 CFR Part 98 Subpart C. Emissions of NO_x, SO_2, and H_2SO_4 were estimated using the following assumptions:

- Coker 3 (B032) NO_x emission factors are based on the stack test performed 8/17/1999;

- ADHT (B029) NO_x emission factor is based on the low-NO_x burner emission factor specified for compliance determination with this heater's NO_x limits in PTI 04-00708 (1992) and the current Title V permit;

- Past actual SO_2 emissions are based on the average concentration of TRS (ppm_v) in refinery fuel gas mix drum (ESMD (235 ppm TRS) for ADHT); (EPA Contactor (367 ppm TRS) for Coker 3) from BP-Husky Toledo refinery testing[1].

- Future potential annual SO_2 emissions are based on an annual average concentration of 70 ppm_v total sulfur in refinery fuel gas.

- H_2SO_4 based on 3% of SO_2 emissions convert to SO_3 and total conversion of SO_3 to H_2SO_4.

2.4.2 Increase in Steam Demand (B034 & B035 – East & West Alstom Boilers)

The TFO Project is expected to increase steam demand in the refinery by an estimated 62 MMBtu/hr (HHV). This increase is within the capacity of the existing boilers. As an "infrastructure" or "support" element of the refinery operations, the relevant boiler emissions for the permitting this project are the maximum expected increase from the incremental increased loading which will result from the maximum utilization of the new or modified facilities.

Emissions for PM, CO, VOC, lead and combustion HAPs are calculated by multiplying the maximum incremental boiler firing by the appropriate AP-42 emission factor from Chapter 1.4 (July 1998). Emissions of NO_x are estimated based on the permitted NO_x performance of 0.036 lb NO_x/MMBtu from P0406444 issued January 12, 2012. Emissions of GHG, SO_2, HAP, and H_2SO_4 emissions were calculated using the same process as described for other combustion sources discussed above.

2.4.3 Sulfur Recovery Units: SRU1 (P009) and SRU2&3 (P037)

As mentioned in the project description, the SRUs are not being modified, but it is anticipated that the sulfur load to the SRUs could increase due to this project. Criteria

[1] Past actual baseline emissions are calculated as the lower of the past actual emissions or allowable emissions.

pollutant emissions, VOC, CO, NO_x, $PM/PM_{10}/PM_{2.5}$, and combustion HAPs primarily result from the combustion of supplemental fuel within the SRUs incinerators and combustors. These emissions are estimated based on the firing rate of natural gas in the SRUs and AP-42 Chapter 1.4 emission factors for natural gas combustion. A GHG emission factor in tons of CO_2e per long ton per day of sulfur production was used to calculate the expected increase in CO_2e from the project. The GHG factor was generated based on data compiled for the 2011 reporting requirements from 40 CFR Part 98 since that is the first full year of available data.

Past actual SO_2 emissions are calculated based on SO_2 CEMs recorded data and flow rates for the SRU stacks. The SRU 1 tail gas flow rate meter was not reliable for the baseline period of 2004-2005, so its flow was estimated based on the amount of sulfur produced in long tons per day in 2004-2005 times the SRU 1 unit specific experienced based ratio of tail gas flow rate to sulfur production (established during periods when the flow meter was reliable and available. The larger SRU 2/3 tail gas flow meter was available for the baseline period.

Future SO_2 emissions are based on the SRU's SO_2 PTE as limited by a new proposed SO_2 emissions limit on the combined SO_2 emissions from the two SRUs. The SRU units' current PTE is limited by NSPS Subpart J which allows up to 250 ppm_v SO_2 in the SRU tail gas unit's stack. However, BPH's SRU performance is, on average, much better than this NSPS limit. BPH proposes the TFO permit impose a new permit limit of 80 tons/yr combined SO_2 emissions from both SRU 1 and SRU 2/3 (expressed as tons/yr rolling-12 month average). This value is BPH's estimated maximum potential annual emissions of these units at their maximum sulfur capacity.

2.4.4 Tankage

The TFO project is anticipated to increase diesel production by approximately one thousand barrels per day (KB/D) and probably decrease gasoline production about 2 KB/D. Nevertheless, for conservatism in estimating TFO project emissions, it has been assumed that diesel increases 2 KB/D resulting in increased throughputs to this product storage tank's resulting increase in VOC emissions. No credit is claimed for a gasoline production decrease.

Diesel is stored in diesel tanks T061 (tank 3), T156 (tank 171), T155 (tank 172), T153 (tank 175), T110 (tank 761), and T111 (tank 775). The incremental throughput

could go through any combination of these tanks at any time. For conservative calculation purposes, it has been assumed that the incremental throughput is routed through the tank that would result in the highest emissions, which is tank 761 (T110), a fixed roof tank.

The incremental tank emissions were calculated using EPA's tank calculation methodology outlined in AP-42 Chapter 7 and using the tank properties and total increased throughput.

2.4.6 Cooling Tower

Some of the proposed changes in the TFO project may require additional cooling water circulation to maintain current temperatures in some of the process streams. The cooling towers won't be changed but maximum cooling water recirculation rate could increase up to 10,000 gallon per minute. This is within the current capabilities of the existing cooling towers. As an "infrastructure" or "support" element of the refinery operations, the relevant cooling tower emissions for the permitting of this project are from the maximum expected increase from the incremental increased cooling water recirculation rate, instead of re-permitting the entire cooling tower capacity at the refinery.

Emissions of total particulate, PM_{10} and VOC have been estimated using AP-42 parameters and emission factors from Chapters 13.4 and 5.1 respectively. A worst-case total dissolved solids average has been based on the recent past operations at the BPH refinery.

Table 2-1 on the next page summarizes the emissions increases and decreases resulting from the TFO project. These are based on calculations as discussed above and presented in Appendix A.

Table 2-1 - TFO Project Emissions Summary

OEPA ID	Description	VOC tpy	NO_x tpy	SO_2 tpy	PM tpy	PM_{10} tpy	$PM_{2.5}$ tpy	CO tpy	CO_2e tpy	Total HAP tpy
Crude Units (replace Heaters, upgrade piping)										
P011	Crude/ Vac 1 (fugitives)	1.8								
B015	Crude 1 Heater (Shutdown)	-7.6	-309.1	-36.6	-10.5	-10.5	-10.5	-115.7	-176,916	-2.6
B031	Vac 1 Heater (Shutdown)	-2.3	-30.4	-11.3	-3.2	-3.2	-3.2	-35.8	-54,708	-0.8
TBD	New Crude Heater	10.6	78.8	15.6	14.7	14.7	14.7	118.3	248,149	3.6
TBD	New Vac 1 Heater	3.5	26.3	5.2	4.9	4.9	4.9	39.4	82,716	1.2
Coker Units (expand unit capacity)										
B032	Coker 3 Heater	0.4	5.4	-11.9	0.6	0.6	0.6	6.9	10,595	0.2
P036	Coker 3 Drum vent and Fugitive	3.9			0.04	0.04	0.04	0.01	36.7	
F002, F005, F006	Coke Handling (Pile/Handling/Crushing)				2.4	2.1	0.3			
ADHT Unit (increased utilization)										
P028	ADHT Unit (fugitives)	0.6								
B029	ADHT Heater (possible Increase)	0.2	3.1	0.5	0.3	0.3	0.3	3.7	6,297	0.1
Steam Boilers (increased steam use)										
B034/ B035	Boilers (increased Stm use)	1.5	9.7	2.1	2.0	2.0	2.0	22.2	32,971	0.5
Sulfur Recovery Complex (increased loading)										
P009/P037	SRU 1,2&3 (increased load)	0.4	7.6	46.4	0.6	0.6	0.6	6.3	26,654.8	0.1
Miscellaneous										
B017/B019/ B022	SO_2 Credits for reducing TRS in RFG			-18.6						
Various	Increased Cooling Water throughput	1.8			6.9	6.9	3.5			
Various	Increased product throughputs/tankage	0.2								
P025	WWT New Components	6.1								
	Project Emission Increases only	31.2	130.9	69.8	32.5	32.1	26.9	196.7	407,419	5.7
	Project Emission Decreases only	-9.9	-339.6	-78.3	-13.7	-13.7	-13.7	-151.5	-231,625	-3.4
	Total Creditable/Contemporaneous Changes	*n/a*	*-195.9*	*44.9*	*-17.9*	*-17.9*	*-17.9*	*-109.7*	*-57,511*	
	Total Project Net Emission Changes	**n/a**	**-404.5**	**36.4**	**0.8**	**0.5**	**-4.7**	**-64.5**	**118,283**	
	PSD Significance Levels	40	40	40	25	15	10	100	75,000	

3.0 Applicable Regulations

The following section lists the major regulations applicable to process units that are new or will be modified in this project. Additionally, in select cases, where it may not be obvious, a discussion is provided why a particular regulation does not apply to this project.

3.1 NSPS Subpart Ja

The New Source Performance Standards (NSPS) at 40 CFR 60 Subpart Ja apply to FCCUs, Cokers, SRUs, and fuel gas combustion devices that are constructed, reconstructed, or modified after May 14, 2007. NSPS Ja also has provisions applicable to new and modified flares. A new revised version of the rule was published in the federal register on September 12, 2012. BPH will comply with the requirements of this final promulgated rule.

This project will result in applicability of this standard to the following sources:

- The new replacement heaters (Crude 1 heaters and Vacuum 1 heater) (new sources);
- The existing Coker 3 Process Unit (modified source).

The existing Hydrocarbon Flares are already subject to Ja as a result of the Reformer 3 Project PTI P0103694 issued 8/7/2009. Other TFO affected heaters will not be subject to Ja since they are not being modified.

The applicability and requirements of NSPS Ja to the Crude Vac 1 heaters and the Coker 3 process unit source types are summarized below.

3.1.1 New Heaters Subject to NSPS Ja

The new Crude and Vacuum heaters will be regulated by NSPS Subpart Ja as new fuel gas combustion devices (heaters). NSPS Ja requires the following:

- SO_2 Emissions
  - The following short term (3 hr) emissions limits:
    - Use of fuel gas that contains H_2S not to exceed 162 ppm_v (or SO_2 not to exceed 20 ppm_v (dry basis, corrected to 0% excess air).

- The following annual (rolling 365 day average) emissions limits:
  - Use of fuel gas that contains H_2S not to exceed 60 ppm_v. (or SO_2 not to exceed 8 ppm_v)

- NO_x Emissions (30 day rolling average):
  - NO_x not to exceed 0.040 pounds per MMBtu HHV (or NO_x not to exceed 40 ppm_v (dry basis, corrected to 0% excess air).

3.1.3 Coker 3 Process Unit (P036) Subject to NSPS Ja

Coker 3 process unit (P036), a delayed coker, will be modified and, therefore, will become an affected source under this regulation.

- NSPS Ja does not have specific emission limitations for delayed cokers, but does require delayed cokers to depressure to 5 lb per square inch gauge and vent the exhaust gases to the fuel gas system, the flare, or other control device prior to opening the vent to the atmosphere. The BPH Toledo Refinery's current operating practice already complies with this requirement. Further, BPH proposes to reduce the coke drum pressure to no more than 2 psig prior to venting to the atmosphere as outlined in Appendix E of this application (GHG BACT).

3.2 NSPS Subpart GGGa - Standards for Equipment Leaks

The Crude/Vac 1 (P011), A-DHT (P029), and Coker 3 (P036) process units will all have new fugitive piping components in VOC service added by the TFO project. The additional components will result in slightly higher emissions from piping. NSPS GGGa applicability is triggered for all the piping components in a process unit if new components are added and result in an emission increase except for small changes not considered a "capital expenditure" (exemption in § 60.590a(c)). The term "capital expenditure" in this context is defined elsewhere in the NSPS rules and EPA guidance to only changes that involve a change which is expensive enough to not quality as routine repair and replacement following formulas and industry specific annual asset repair guideline factors specified by EPA and the Internal Revenue Service.

Based on the estimated costs of the additional piping components at these process units, the piping modifications at each of the above listed process unit will meet the definition of 'Capital Expenditure' as defined in 40 CFR 60.14. Therefore, these

emissions units will be considered modified as defined in 40 CFR 60.590a and NSPS GGGa will apply.

Compliance with NSPS Subpart GGGa will be achieved by adding the new piping components from these emissions units into the existing refinery wide LDAR program which is designed to provide monitoring, leak repair and recordkeeping for affected process units meeting the requirements of NSPS Subparts GGGa and VVa (to which Subpart GGGa refers) as well as Refinery MACT Subpart CC.

3.3 NSPS Subpart NNN - Standards of Performance for Volatile Organic Compound (VOC) Emissions from Synthetic Organic Chemical Manufacturing Industry (SOCMI) Distillation Operations

The provisions NSPS Subpart NNN apply to distillation operations that produces any of the chemicals listed in 40 CFR 60.667 as a product, co-product, by-product, or intermediate. The modifications to the Coker Gas Plant at the Coker 3 process unit (P036) include an absorber/stripper and debutanizer distillation process that will produce both propane and butane. These products are listed in the NSPS NNN applicable chemical list. Accordingly, NSPS NNN will apply to this part of the gas plant distillation process and BPH will comply with the applicable NSPS requirements

3.4 40 CFR Subpart CC—National Emission Standards for Hazardous Air Pollutants from Petroleum Refineries

Equipment leaks in the new and affected process units including the Crude Vacuum 1 (P011), Coker 3 (P036), and the ADHT (P028) already are and will remain subject to the existing source provisions of 40 CFR 63 Subpart CC, also known as Refinery MACT I. Compliance will be maintained by adding the new fugitive piping components into the refinery wide LDAR program which complies with the requirements of Subpart CC. As discussed above, these new components will also meet the requirements of NSPS Subpart GGGa.

3.5 40 CFR Subpart DDDDD — National Emission Standards for Hazardous Air Pollutants for Major Sources: Industrial, Commercial, and Institutional Boilers and Process Heaters

MACT Subpart DDDDD applies to commercial, institutional and industrial boilers and process heaters at major sources of HAP. The status of the MACT Subpart DDDDD rule

is still in flux. A reconsideration of the rule was proposed on December 23, 2011 after the "final" rule was published on March 21, 2011. The "final" rule was stayed on May 18, 2011, but then unstayed on January 8, 2012 making the "final" rule effective once again. It is anticipated that by the start-up of the new heaters, the March 2011 "final rule" will be replaced by the "reconsidered" rule. Unless the final rule changes, the new Crude 1 and Vacuum 1 heaters will be subject to the requirements in the rule for new process heaters designed to burn gas 1 fuels, which include natural gas and refinery gas.

In both above versions of the rule, the only requirement specifically applicable to a new refinery fuel gas fired heater greater than 10 MMBtu/hr size is the completion of an annual tune-up as specified in § 63.7540. (The tune-up requirements are specified in §63.7540 paragraphs (a)(10)(i) through (vi))

Regarding allowable time between the tune-ups, per 63.7515(e), annual is no more than 13 months. The burner inspection may be delayed until the next scheduled or unscheduled unit shutdown per §63.7540 (a)(10)(i), but each burner must be inspected at least once every 36 months. If the unit is not operating on the required date for a tune-up, the tune-up must be conducted within one week of the next startup.

MACT Subpart DDDDD also requires a one-time energy assessment for facilities with existing affected boilers or heaters. BPH will be required to perform this assessment, as required by DDDDD, regardless of the TFO project (if this provision of DDDDD remains in the final rule.)

As mentioned, the above requirements could change upon EPA's issuance of a final new rule. When the final rule is issued and the effective date is established, the existing and new BP-Husky affected heaters will comply with the requirements of the final rule.

3.6 40 CFR Part 51 and 52 New Source Review and Prevention of Significant Deterioration (NSR/PSD)

The BPH Toledo Refinery is an existing major source for New Source Review purposes. As such, any new project needs to be reviewed for potential applicability under either Prevention of Significant Deterioration (PSD) or Non-attainment New Source Review (NSR) requirements. Section 4.0 of this permit application discusses the applicability of these requirements relative to the TFO project.

3.7 Ohio Permitting Regulations

Prior to the modification of an existing emissions unit, a Permit to Install (PTI) must be applied for and issued as directed by OAC Rule 3745-31. Only after the PTI is issued may a facility begin modification of the emissions unit (except for site preparation activities allowed by OAC 3745-31-33.) A period of 18 months from the date of PTI issuance is allowed for commencing construction. This application includes the required elements for OEPA to review and issue a PTI. Other Ohio air rules applicable to the emission units in the TFO project are discussed in the following sections.

3.7.1 OAC rule 3745-31-05 Ohio Best Available Technology (BAT)

OAC Chapter 3745-31-05, Paragraph 31-05(A)(3) requires that a new or modified source with the potential to emit greater than 10 tpy of any pollutant with a NAAQS standard employ Best Available Technology (BAT).

BAT is defined in OAC 3745-31-01 as "*any combination of work practices, raw material specifications, throughput limitations, source design characteristics, an evaluation of the annualized cost per ton of air pollutant removed, and air pollution control devices that have been previously demonstrated to the director of environmental protection to operate satisfactorily in this state or other states with similar air quality on substantially similar air pollution sources.*" The BAT evaluation considers the energy, environmental, economic, and other costs associated with each alternative technology, and the benefit of reduced emissions that the technology would bring.

Section 5 of this application contains the BAT analysis for the project's emissions sources.

3.7.2 OAC rule 3745-21-09(T) Leaks from petroleum refinery equipment

This state regulation will apply to the proposed new and modified process equipment (piping components). The requirements of this rule are generally less stringent than other applicable regulations including NSPS GGGa and MACT Subpart CC discussed above. Ohio EPA has previously agreed that consistent with the U.S. EPA streamlining policy that BPH may elect to demonstrate compliance with this rule by demonstrating compliance with rules that are generally more stringent. Compliance will be achieved by adding the new fugitive piping components into the refinery wide LDAR program which complies with the requirements of Subpart CC. As discussed above, these new components will also meet the requirements of NSPS Subpart GGGa.

3.7.3 OAC rule 3745-109 (Clean Air Interstate Rule)

This rule is not applicable to any new TFO project source. Ohio EPA rules to comply with the requirements of U.S. EPA's Clean Air Interstate Rule ("CAIR") found in Volume 70 of the Federal Register, Page 25162 (70 FR 25162), are contained in OAC 3745-109. The CAIR rules require reductions in air emissions of nitrogen oxides (NO_x) and sulfur dioxides (SO_2) from Electric Generating Units (EGUs) and to fossil fuel-fired industrial boilers greater than 250 MMBTU/hr (non-EGU's). However, the CAIR rule does not apply to large heaters that do not generate steam or heat some other heat transfer medium. The new and modified process heaters for the TFO project directly heat process feedstocks, without the use of a heat transfer medium. Consequently, the CAIR rule is not applicable.

3.7.4 Ohio Air Quality Analysis

The criteria pollutant emissions from this project for SO_2 are above the Ohio Modeling Significant Emissions Rates outlined in OEPA Engineering Guide #69. Specifically, the SO_2 Significant Modeling Emissions rate is 25 tons SO_2/yr. BP-Husky has completed an Ohio air quality impact analysis for this pollutant to verify that the proposed TFO project will not have a negative impact on SO_2 in Ohio.

Air dispersion modeling was conducted using the SCREEN 3 air dispersion model. Table 3-1 below shows that all modeled concentrations were found to be less than Ohio's Acceptable Increment Impact. Full detail on the modeling inputs and results can be found in Appendix B.

Table 3-1: Modeling Results Compared to Ohio EPA Thresholds

Pollutant	Averaging Period	Ohio Acceptable Incremental Impact* ($\mu g/m^3$)	TFO Project Modeled Impacts ($\mu g/m^3$)	% of Threshold
SO_2	Annual	10	1.40	14%
	24-hr	45.5	19.6	43%
	3-hr	256	44.2	17%

*Established in Ohio's Engineering Guide #69

3.7.5 OAC Rule 3745-114 (Air Toxics)

On December 01, 2006, Ohio EPA's list of toxic air contaminants in OAC 3745-114-01 became effective. The Ohio EPA toxicologist recommended 303 compounds for

the toxic air contaminant list based on a review of available scientific evidence. Ohio EPA's modeling guidance in Engineering Guide #69 requires an air toxic analysis for increases in air toxics from a project that are greater than or equal to one ton per year (1 tpy). Modeled emissions are compared to the Maximum Acceptable Ground-Level Concentration (MAGLC) as it is calculated in the DAPC's Review of New Sources of Air Toxics Emissions[2]. The modifications to the Coker 3 process unit (P036) have an increase in H_2S emissions that exceed 1 tpy. Therefore, an Air Toxics Analysis has been conducted to compare the modeling impacts from this source. As shown in Table 3-2, the maximum ground-level concentration for H_2S resulting from this increase does not exceed the MAGLC and will have ground-level impacts that are acceptable to Ohio EPA.

In addition, Ohio air toxic policy does not require evaluation of air toxics that are emitted in quantities less than one ton/year. Further, ORC 3704.03(F) (f)(i) states that the air toxics policy does not apply to air contaminant sources that combust fossil fuels. Therefore, the proposed new and affected heaters in the TFO project scope, which combust exclusively refinery fuel gas, are not subject to air toxics modeling and were not included in the analysis. The detailed Air Toxics Analysis is included in Appendix B.

Table 3-2: Air Toxics Analysis Results

Air Toxic	Project Emissions (g/s)	Maximum Predicted Concentration (µg/m3)	Ohio MAGLC (Annual) (µg/m3)
H_2S	0.052	111.8	331.6

[2] Ohio EPA Division of Air Pollution Control, *Option A Review of New Sources of Air Toxic Emissions*

4.0 New Source Review for Attainment and Non-Attainment Areas (NSR/PSD)

The BPH Toledo Refinery is an existing major source for New Source Review purposes. Since Lucas County is in attainment for all pollutants, the net emissions from the TFO project have been reviewed to determine if the project is a "major modification" and subject to further PSD review. The first step in evaluating PSD applicability is to look at just the annual emissions increases from the proposed TFO project alone. As shown in Table 4-1, the combined project emissions increases will exceed the PSD significance threshold for several regulated pollutants. Therefore, PSD would be triggered for these pollutants unless, as a second step of the PSD review, a netting analysis, is performed which shows that the overall project net emission are below the PSD applicability thresholds. The second step of the PSD applicability determination considers both project increases and decreases along with other contemporaneous and creditable increases and decreases.

As shown in the below Table 4-1, VOC project emission increases alone are not above the PSD significant emission rates. Therefore, PSD is not applicable to this pollutant and the PSD netting review described above (Step 2) is not triggered for this pollutant. The other listed pollutants have increases that are above the PSD significance levels. Accordingly, a netting analysis was performed for each of the other pollutants because their project increases alone were significant. The netting analysis of all these other pollutants, except greenhouse gases, shows that the TFO project emission impacts, together with the other contemporaneous increases and decreases occurring at the facility, result in overall net emissions of each below the applicable PSD significance levels. For greenhouse gas (GHG) emissions, overall net emissions are increased by approximately 118,000 tons/yr CO_2e. This is above the PSD significant emission rate of 75,000 tons/yr. Consequently, PSD will be triggered for GHG, but only for GHG emissions.

The following sections discuss the contemporaneous and creditable emission changes reflected in the netting analysis and other proposed permit conditions used to make the assumptions of the netting analysis enforceable.

Table 4-1 TFO Project Net Emissions Summary

Description	VOC tpy	NO_x tpy	SO_2 tpy	PM tpy	PM_{10} tpy	$PM_{2.5}$ tpy	CO tpy	CO_2e tpy
Project Emission Increases only	31.2	130.9	69.8	32.5	32.1	26.9	196.7	407,419
Project Emission Decreases only	-9.9	-339.6	-78.3	-13.7	-13.7	-13.7	-151.5	-231,625
Total Creditable/Contemporaneous Changes	*n/a*	*-195.9*	*44.9*	*-17.9*	*-17.9*	*-17.9*	*-109.7*	*-57,511*
Total Project Net Emission Changes	**n/a**	**-404.5**	**36.4**	**0.8**	**0.5**	**-4.7**	**-64.5**	**118,283**
PSD Significance Levels	40	40	40	25	15	10	100	75,000

Note: Details of the TFO Project emissions (increases and decreases) are presented Table 2.1 at the end of Section 2. Contemporaneous and creditable changes are summarized below and discussed in the next section (Section 4.1)

Contemporaneous Summary			VOC	NO_x	SO_2	PM	PM_{10}	$PM_{2.5}$	CO	CO_2e
Year	Permit Number	Project Description	tpy	tpy	tpy	tpy	tpy	tpy	tpy	tpy
2012	P0103974	New Oily Water Sewer Project	0.72	NA	NA	NA	NA	NA	NA	NA
2012	P01003694	Reformer 3 Project	12.25	-167.91	32.98	-19.34	-19.34	-19.34	-129.01	-81,416
2012	P0107114	190,000 bbl FR Oil tank - conservation vent, N2 blanket	9.99	NA	NA	NA	NA	NA	NA	NA
2013	P0108950	BGOT Recycle Gas Compressor Project	5.32	6.99	4.99	1.43	1.43	1.43	15.80	24,512
2012	P0108887	FCCU Preheat Heater Replacement	2.48	-35.01	6.91	-0.01	-0.01	-0.01	3.48	-607

.

4.1 Contemporaneous Increases and Decreases

For PSD applicability determination netting, one considers all contemporaneous and creditable emission changes. The contemporaneous period is defined in Ohio permitting regulation OAC 3745-31-01 Definitions (TTT)(3)(a) as being "…*between the date five years before construction on the particular change commences and the date that the increase from the particular change occurs*". For the purposes of this permitting action, construction is assumed to begin in August 2013 and startup of the first elements of the TFO project are anticipated to be late-2014, with final project start-up likely in late 2015. Consequently, the contemporaneous period for this permitting is assumed to begin August 2008 and end in late-2015. Table 4-2 lists the five past projects that fall within this contemporaneous period and Table 4-3 provides further details of these projects.

Table 4-2 Contemporaneous Projects

Description of Project	Permit	Date of PTI	Anticipated Startup.
New Reformer 3 (includes shutdown of Reformer 1 & 2 and H2 Unit)	P0103694	8-7-09	Late 2012
New Oily water sewer drains	P0103974	3-23-09	Late 2012
New BGOT RGC Project	P0108950	5-4-12	2013
FCCU Preheat heater replacement (B018)	P0108887	5-4-12	Spring 2013
New 190,000 bbl Oil tank w fixed roof, conservation vent, and N_2 blanket	P0107114	2-28-11	Late 2012

Table 4-3 Detailed Emissions Increases and Decreases from Projects Occurring in Contemporaneous Period

Description of Project	Permit	Date of Change	NO_x (tons/yr)	CO (tons/yr)	SO_2 (tons/yr)	PM/ PM_{10}/ $PM_{2.5}$ (tons/yr)	VOC (tons/yr)	H_2SO_4 (tons/yr)	HAPs (tons/yr)	CO_2e (tons/yr)
New Oily water sewer drains	P0103974	Summer 2012					0.72	0.00		0
New Oily Water Sewer Project Totals							**0.72**	**0.00**		**0**
Reformer 3 (Note 1)	P01003694	Fall 2012	79.61	84.63	38.00	NA	28.27	1.75		287,477
Shutdown of Reformer 1 Heater (B014)	P01003694	Fall 2012	-105.41	-55.94	-1.57	-5.06	-3.66	-0.07		-73,323
Shutdown of Reformer 1 Regenerator Heater (B013)	P01003694	Fall 2012	-1.14	-0.96	-0.02	-0.09	-0.06	0.00		-928
Shutdown of Reformer 2 Heater (B006)	P01003694	Fall 2012	-72.98	-86.63	-1.96	-7.84	-5.67	-0.09		-113,693
Shutdown of Reformer 2 Regenerator Heater (B005)	P01003694	Fall 2012	-3.69	-3.10	-0.07	-0.28	-0.20	0.00		-3,693
Shutdown of Reformer 1 (P019)	P01003694	Fall 2012					-1.74	0.00		-121
Shutdown of Reformer 2 (P020)	P01003694	Fall 2012					-0.19	0.00		-589
Shutdown of Hydrogen Heater (B001) and Hydrogen Plant (P042)	P01003694	Fall 2013	-64.29	-67.01	-1.40	-6.07	-4.50	-0.06		-176,546
New Reformer 3 Contemporaneous Project Totals			**-167.91**	**-129.01**	**32.98**	**-19.34**	**12.25**	**1.52**	**0.00**	**-81,416**
New 190,000 bbl Oil tank w fixed roof, conservation vent, and N2 blanket	P0107114	Late 2012					9.99			
New Oil Tank with fixed roof and N_2 blanket							**9.99**			
New BGOT RGC Project Fugitives	P0108950	Spring 2013					2.96		0.30	
Increase (B030) from BGOT RGC	P0108950	Spring 2013	6.99	3.79	1.13	0.34	0.25	0.05	0.12	6,767
Increase (B033) from BGOT RGC	P0108950	Spring 2013		12.01	3.86	1.09	0.79	0.18	0.01	17,745
Increase Crude 1 Heater firing (9 MMBtu/hr increment)	P0108950	Spring 2013	Emissions not included in contemp totals because of double counting - This furnace is being shutdown for the TFO project							
Incremental feed rate increase to FCCU from BGOT RGC feed rate increase to BGOT unit	P0108950	Spring 2013	This source experienced an emissions decrease from the baseline period for the BGOT RGC project. No increases to show for the contemporaneous period.							
New Oily sewer drain plus Crude & Gas Tankage throughput increase	P0108950	Spring 2013					1.32			
New BGOT RGC Contemporaneous Project Totals			**6.99**	**15.80**	**4.99**	**1.43**	**5.32**	**0.23**	**0.43**	**24,512**
Incremental Steam demand needed for replacement of FCCU Preheater Heater with heat exchangers	P0108887	Fall 2012	2.72	14.80	11.01	0.25	0.73	0.51	0.25	16,121
New fugitive components for new FCCU heat exchangers	P0108887	Fall 2012					2.49			4
FCCU Preheat Heater shutdown (B018)	P0108887	Fall 2012	-37.73	-11.32	-4.10	-0.26	-0.74	-0.19	-0.25	-16,732
New FCCU Preheat Replacement Project Totals			**-35.01**	**3.48**	**6.91**	**-0.01**	**2.48**	**0.32**	**0.00**	**-607**
Contemporaneous Totals			**-195.93**	**-109.73**	**44.88**	**-17.92**	**20.77**	**2.06**	**0.43**	**-57,511**

In a netting analysis, contemporaneous changes are only considered if they are also "creditable". Per Ohio regulation OAC 3745-31-01 Definitions (TTT)(3)(b) *"An increase or decrease in actual emissions is creditable only if the director has not relied on it in issuing a permit for the stationary source under regulations approved pursuant to this rule"*. The agency relies on an increase or decrease when, after taking the increase or decrease into account, it concludes that a proposed project would not cause or contribute to a violation of an increment or ambient air quality standard. In other words, an emissions change at an emissions point which was considered in the issuance of a previous PSD permit for the source is not included in the source's "net emissions increase" calculation. This is done to avoid "double counting" of emissions changes.

The particulate emissions increases for the Reformer 3 project (P0103694) were subject to PSD. The permitting for the Reformer 3 project included implementation of Best Available Control Technology (BACT) and an air quality analysis which demonstrated that the particulate increases would not cause a violation of the increment or an ambient air quality standard. As such, those emissions are not creditable for the TFO project's netting. Since the particulate emission increases from the new Reformer 3 furnace were addressed in this previous PSD permit, these emissions are not included in the TFO contemporaneous netting analysis.

However, the new Reformer 3 permit also required the shutdown of the existing Reformer 1 and 2 units and the existing Hydrogen Unit. Shutting down those units will result in decreases to particulate emissions. Those decreases were not relied upon in the Reformer 3 permitting and remain creditable for TFO netting purposes. Consequently, since these emissions are contemporaneous and creditable, they are included in the TFO contemporaneous netting analysis.

The below table 4-3 is provided for informational purposes and shows the PTI's issued prior to those above to verify that they are no longer contemporaneous.

Table 4-4 Previous Projects no longer contemporaneous

Description of Project	Permit	Date of PTI	Date of startup
Delta Valve Project	04-01471	7-17-07	November-07
FCCU Wet Gas Compressor Replacement	04-01482	9-18-07	December-07
Tank 157 reconstruction	04-01492	11-1-07	May-08
ESP Startup (Note 2)	Consent Decree/ TV	n/a	May-08
New Marine Loading tank	04-01496	6-3-08	Not installed

4.2 Project Creditable SO_2 Emissions Decreases from Fuel Gas TRS Reduction (Modified Coker Gas Plant)

While the BPH refinery's refinery fuel gas amine treatment system is extremely effective in removing hydrogen sulfide (H_2S), it does not remove some other sulfur species such as methyl mercaptan (CH_4S) which are present in some refinery fuel gas streams, especially in the fuel gas produced from Coking units. As part of this project, BPH will be installing improvements to the Coker 3 gas processing to provide better recovery of light hydrocarbons and improved removal of sulfur to prevent their carrying into the refinery fuel gas system. A benefit of these improvements will be a reduction of the amount of organic sulfur compounds in the refinery fuel gas system and a resultant decrease in SO_2 emissions from many refinery heaters. As discussed further in Appendix F, recent testing shows that current total sulfur levels in refinery fuel gas average 235 ppm total reduced sulfur (TRS) in the TIU mix drum RFG and 367 ppm TRS in Coker 3/EPA RFG. The TFO project planned improvements, once fully implemented, will reduce these levels, on an annual average basis, significantly.

BPH is proposing new lower enforceable permit limits on SO_2 from some of the refinery's existing heaters consistent with this planned reduction in the total sulfur content of the refinery fuel gas. These new lower limits will allow the project to reduce SO_2 emissions from some of the refinery heaters in Table 4-5 and ensure the net SO_2 emissions associated with the TFO project remain below the PSD significance levels. Table 4-5 summarizes the new proposed SO_2 emissions limits for each such heater in comparison to its baseline past actual emissions and current allowable emissions.

Table 4-5 New Proposed SO_2 Annual Emissions

	RFG Source	Past Actual Baseline (2004/5)	Existing PTI SO_2 allowable	Proposed New SO_2 Limit	Project SO_2 Emissions Change
Description		**TPY**	**TPY**	**TPY**	**TPY**
Naph. Treater Heater (B022)	TIU	7.15	91.45[a]	2.69	-4.46
Coker 3 Heater (B032)	EPA	20.46	20.46	8.58	-11.88
Coker 2 Heater (B017)	TIU	4.77	91.45[a]	2.69	-2.08
Crude Vac 2 Heater (B019)	TIU	21.02	21.02	8.95	-12.07
ADHT Heater (B029)	TIU	0.18	2.32	0.69	0.51

Note a: Naphtha Heater and Coker 2 heater do not have any SO_2 limits other than SIP limit of 0.29 lb SO_2 per MMBtu/hr allowable.

Although additional reductions in SO_2 emissions from some other heaters likely will occur, no other changes to allowable emissions for other heaters are claimed in this project's PSD netting. (Note: The TFO PSD netting analysis does assume that OEPA will impose annual SO_2 limits on the maximum annual PTE for the new Crude 1 and Vacuum 1 heaters being installed by this project at the emissions rates in Table 2-1 and detailed in Appendix A.)

Due to practical project execution constraints, implementation of this refinery fuel gas sulfur improvements may not be in place immediately upon the start-up of the TFO project scope items that would increase SO_2 emissions. Therefore, BPH proposes to demonstrate compliance with the new SO_2 limits in Table 4-5 only after the completion of the modified Coker gas plant portion of this project, which may lag startup of the first SO_2 increasing scope elements by approximately 15 months. For the interim period before the modifications of the Coker gas plant, BPH is proposing an interim SO_2 group limit on total SO_2 emissions from emission units affected by the TFO project and all contemporaneous projects to keep project SO_2 increases below PSD significance levels. The interim group limit will be effective until the new permanent emissions limits discussed above become effective, which is proposed to be the later of (a) fifteen (15) months or (b) the completion of construction and initial shakedown of the modified Coker Gas Plant. Details of the proposed interim SO_2 group limit are included in the Administrative Permit Application included in Appendix G.

4.3 Other Proposed Permit Condition Changes

New SO_2 limits on the SRUs: In order to ensure that SO_2 emissions increases from the TFO project do not exceed significance levels, BPH is proposing to limit the maximum combined potential SO_2 emissions increase of the refinery's Sulfur Recovery Units, SRU 1 (P009) and SRU 2/3 (P037) on a 12-month rolling basis. SRU 2/3 currently has a PTI limit of 172 tons/yr SO_2. SRU 1 does not have a current limit. BPH proposes a limit on the combined SO_2 emissions of the two units of 80 tons/yr SO_2 on a rolling 12 month average basis. Each unit has an existing SO_2 CEMs which can be used to demonstrate compliance.

5.0 Best Available Technology (BAT)

As mentioned in Section 3.6.1 of this application, the permitting of the TFO project requires the employment of Best Available Technology (BAT) on new or modified emissions sources as required under the OAC Chapter 3745-31-05, "Criteria for decision by the director". One of these requirements is that BAT be installed for all new and modified units that emit criteria pollutants with an applicable NAAQS standard. Accordingly, the pollutants subject to BAT for this project are VOC, CO, SO_2, particulate, and NO_x. GHG and HAP emissions are not subject to BAT because no NAAQS standard applies. However, these emissions are typically minimized through the implementation of BAT on the other regulated pollutants. New and modified equipment in this project subject to BAT are the Crude/Vacuum 1 new heaters, new fugitive piping components and the modified Coker 3 process unit. Other unmodified emission sources that merely increase utilization are not subject to this requirement.

BAT is defined in Ohio EPA Engineering Guide #42 as "*a case-by-case determination of an emissions limit and/or control technique which, taking into account environmental, energy, and economic considerations, represents the maximum emission control achievable by the source.*" The BAT evaluation considers the energy, environmental, economic, and other costs associated with each alternative technology, and the benefit of reduced emissions that the technology would bring.

According to OEPA policy[3] the procedure for determining BAT limits includes first evaluating if a MACT/BACT or LAER standard applies for each emission unit/pollutant. If one of these standards apply, then this is the BAT limit. If there is no MACT, BACT or LAER standard, next the state VOC and NO_x RACT rules are reviewed to see if a similar source has a RACT limit. If so, the most stringent RACT limit on the same type of source becomes the BAT limit. Finally, if none of these limits apply to the new or modified emission units or the pollutants emitted, then a case-by-case BAT analysis is performed.

In the case of this project, there are no MACT, BACT, LAER or RACT limits applicable to the Ohio BAT regulated pollutants for the TFO new or modified sources.

[3] *BAT Requirements for Permit Applications Filed On or After August 3, 2009,* Inter-Office Communication from M. Hopkins, December 10, 2009.

Accordingly, BPH utilized a case-by-case "top-down" approach to review various control strategies for the BAT regulated emissions from the TFO project. The "top-down" evaluation of BAT commonly follows a five-step process summarized as follows:

- Step 1 – Identify All Control Technologies;
- Step 2 – Eliminate Technically Infeasible Options;
- Step 3 – Rank Remaining Control Technologies by Control Effectiveness;
- Step 4 – Evaluate the Most Effective Controls and Document Results;
- Step 5 – Select BAT.

Where a New Source Performance Standards (NSPS) in 40 CFR Part 60 applies to a source subject to BAT, that NSPS defines the minimum level of control considered in the BAT analysis. It is common for BAT to be determined to compliance with the applicable NSPS, especially for newly established NSPS standards. The applicable NSPS regulations to the new and modified sources in the TFO project are as follows:

- NSPS Subpart Ja, which regulates SO_2 emissions from new or modified heaters by requiring combustion devices that burn gaseous fuels to only burn gas with no more than 162 ppm H_2S (3-hour average) and 60 ppm (H_2S) on an annual average, (or expressed as SO_2 in the stack: 20 ppm 3-hr average and 8 ppm annual average),

- NSPS Subpart Ja, which limits NO_x emissions from new or modified heaters to 0.04 lb/MMBtu or 40 ppm_v (dry basis, corrected to 0% excess oxygen) on a 30-day rolling average for refinery process heaters,

- NSPS Ja, which requires delayed cokers to depressure to 5 lb per square inch gauge before venting the exhaust gases to the fuel gas system; and

- NSPS Subpart GGGa, which requires use of a specific LDAR program to control VOC emissions from piping (applicable to the new fugitive component additions of this project).

Table 5-1 summarizes the BAT proposals for the TFO project's new or modified emissions sources. The following sections describe and document the BAT determination for each emission unit type and pollutant.

Table 5-1. BAT Determination Summary

Emission Unit	Pollutant	BAT
Two 225 MMBtu/hr Crude 1 Process Heaters	NO_x	Low NO_x burners @ 0.04 lb NO_x/MMBtu annual average
	SO_2	NSPS Ja Clean Fuel Gas standards (achieving 60 ppm H_2S on an annual average, 162 ppm H_2S 3-hr average)
	CO	Good combustion practices
	VOC	Good combustion practices
	$PM/PM_{10}/PM_{2.5}$	Good combustion practices
150 MMBtu/hr Vac 1 Heater	NO_x	Low NO_x burners @ 0.04 lb NO_x/MMBtu annual average
	SO_2	NSPS Ja Clean Fuel Gas standards (achieving 60 ppm H_2S on an annual average, 162 ppm H_2S 3-hr average)
	CO	Good combustion practices
	VOC	Good combustion practices
	$PM/PM_{10}/PM_{2.5}$	Good combustion practices
Coker 3 Process Unit	VOC	Depressurization to 2 psig before venting to atmosphere
Fugitives from Equipment Leaks (CV1, Coker 3, and ADHT)	VOC	LDAR program per NSPS (40 CFR 60 Subpart GGGa) and Refinery MACT (40 CFR 63 Subpart CC) and low leak valves and packing provided they are commercially available

The following sections discuss each BAT analysis and recommendations. Emissions from the new heaters were reviewed as a group due to their similar characteristics.

5.1 BAT for NO_x from Refinery Heaters

There are no MACT/BACT/LAER or RACT limits specifically for NO_x emissions that apply to the proposed new refinery heaters at the Crude 1 and Vacuum 1 unit. Therefore, a case-by-case analysis was performed.

Step 1 – Identify All Control Technologies

Nitrogen oxides (NO_x) are formed during the combustion of fuel in the heater and are generally classified as either thermal NO_x or fuel-related NO_x. Thermal NO_x results when atmospheric nitrogen is oxidized at high temperatures to yield NO, NO_2 and other

oxides of nitrogen. Fuel-related NO_x is formed from the chemically bound nitrogen in the fuel. For natural gas or refinery fuel gas combustion, thermal NO_x formation is the dominant mechanism since there is little or no nitrogen bound in the fuel.

The rate of formation of thermal NO_x is a function of residence time and free oxygen, and is exponential with peak flame temperature. "Front-end" NO_x control techniques are aimed at controlling one or more of these variables. The most efficient front-end combustion controls for heaters include low NO_x burners. "Add-on" controls attempt to chemically reduce the NO_x emissions after they are created through catalytic or non-catalytic techniques.

In order to identify possible NO_x control technologies and resulting emission rates, a review of EPA's RACT/BAT/LAER Clearinghouse was conducted. A search of the RACT/BACT/LAER Clearinghouse (RBLC) was conducted, and several entries within the past ten years were found for similar refinery-fuel gas fired heaters. Table 5-2, Database Survey -- Available NO_x Control Technologies, summarize the information found. The data search results were filtered to leave only BACT determinations on refinery-fuel gas heaters and boilers, and to show only those with lb/MMBtu limits to allow for comparison.

- For heaters less than 200 MMBtu/hr, no add-on controls were identified in the RBLC. Emissions limits utilizing combustion controls of low-NO_x or Ultra-Low NO_x burners range from 0.03-0.08 lb/MMBtu, and

- For heaters and boilers greater than 250 MMBtu/hr, there are examples of LNB, FGR or SCR with a range of emission limits of 0.0125 – 0.08 lb NO_x/MMBtu.

Table 5-2
Snapshot of Database Survey Results -- NO_x Emission Controls for RFG-fired Heaters

Unit	Company	Capacity	Emission Limit	Control Method	State	Basis	Permit No. Date
Multiple Refinery Heaters	Valero Refining LLC, St. Charles Refinery	86-135 MMBtu/hr	0.04 lb/MMBtu (three one-hour test avg)	Ultra Low NO_x Burners	LA	BACT	PSD LA-619 (MA) 11/17/2009
		68-90 MMBtu/hr	0.05 lb/MMBtu (three one-hour test avg)	Low NO_x Burners			
		70 MMBtu/hr	0.08 lb/MMBtu (three one-hour test avg)	Low NO_x Burners			
Crude Heater	Valero Delaware City Refinery	456 MMBtu/hr	0.04 lb/MMBtu (3-hr rolling avg)	SCR	DE	RACT	AQM-003/00016 2/26/2010
Boiler 1 at Delaware City Power Plant		618 MMBtu/hr	0.015 lb/MMBtu (24-hr rolling avg)	SCR with modifications to burners, overfire-air, installation of induced flue gas recirculation and other improvements		BACT-PSD	
Boiler 3 at Delaware City Power Plant		618 MMBtu/hr	0.015 lb/MMBtu (24-hr rolling avg)				
Boiler No. 1	Marathon Petroleum Co. LLC Garyville Refinery	525 MMBtu/hr	0.4 lb/MMBtu (annual avg)	Ultra Low NO_x Burners (ULNB) and Flue Gas Recirculation (FGR)	LA	BACT-PSD	PSD-LA-719 12/27/2006
A&B Crude Heaters, Coker Heater		474-542 MMBtu/hr	0.0125 lb/MMBtu (annual avg)	Ultra Low NO_x Burners and SCR (Voluntary)			
Multiple Refinery Heaters		74-540 MMBtu/hr	0.03 lb/MMBtu (annual avg)	Ultra Low NO_x Burners without air preheat			
Three Boilers	Valero Refining LLC, St. Charles Refinery	715 MMBtu/hr each (3)	0.04 lb/MMBtu	Ultra Low NO_x Burners with air preheat	LA	BACT-PSD	PSD LA-619 (MA) 11/17/2009
Refinery Heater		644 MMBtu/hr	0.08 lb/MMBtu (three 1-hr test avg)	Low NO_x Burners			
Unit 40 Boiler	Conoco-Phillips Borger Refinery	598 MMBtu/hr	0.02 lb/MMBtu (3-hr avg)	Low NO_x Burners with 35% FGR or Fuel Dilution	TX	BACT-PSD	9868A 12/20/2006

In addition to the findings in our RBLC search results and based on experience and industry knowledge with other types of combustion sources, we have identified selective non-catalytic reduction (SNCR) as an additional technology to consider. Therefore, the following potential NO_x control technology options are evaluated in this BAT analysis:

- Low NO_x (or ultra low NO_x) Burners;
- Flue Gas Recirculation
- Selective Catalytic Reduction (SCR); and
- Selective Non-Catalytic Reduction (SNCR).

A description of each technology and its potential application to the proposed heaters is included in the following section.

Step 2 – Eliminate Technically Infeasible Options

Combustion Controls (Low NO_x burners) - Combustion modifications, such as low-NO_x burners reduce the concentration of NO_x emissions in the heater exhaust gas by decreasing combustion temperature or decreasing the quantity of oxygen available for combustion. The most commonly used burner in process heaters is the direct flame type, where combustion is performed in the open space within the heater's firebox. Typical low NO_x combustors achieve 0.04 to 0.07 lb NO_x/MMBtu on an annual average basis. More advanced "next generation ultra-low NO_x burner" can, in some circumstances, be designed to achieve as low as 0.02 lb NO_x/MMBtu on an annual average basis on some types of fuels and heaters.

The ultimate performance of advanced low-NO_x burners depends on the exact composition of gaseous fuel and the configuration and operating conditions of the specific heater. Although, some PSD BACT entries in the RBLC database for heaters show predicted annual emissions performance of 0.03 lb NO_x/MMBtu, BP-Husky believes that this low level may not be possible for ultra-low NO_x burners in BP-Husky's proposed heaters. The BPH Toledo Refinery has past experience installing burners supposedly designed to achieve 0.018 lb/MMBtu, which performed at a level of 0.036 lb/MMBtu in actual operation. In the proposed heater configurations, and with BP-

Husky Toledo refinery fuel gas, BP-Husky estimates that the lowest consistently achievable emissions rate with ultra-low NO_x burners is 0.04 lb NO_x/MMBtu fuel input, which is the level required by NSPS Ja. The use of Low NO_x or ultra-Low NO_x burner technology is a feasible option and is carried forward to Step 3 in the BAT analysis.

FGR - Flue gas recirculation (FGR) is a combustion control technology used to reduce NO_x, typically on large utility boilers. FGR involves the recycling of flue gas into the fuel-air mixture at the burner to help cool the burner flame. (Note: Internal FGR is a feature in some low NO_x burners in which hot O_2-depleted flue gas from inside the heater is drawn into the combustion zone using burner design features. This feature is considered under combustion control.) External FGR requires the use of hot-side fans and ductwork to route a portion of the flue gas in the stack back to the burner windbox. External FGR is typically not considered a stand-alone NO_x technique. Additionally, FGR has had limited success with process heaters, mainly due to operational constraints and the high cost of the additional fan and ductwork. For these reasons, external FGR is considered technically infeasible and is not carried forward as a NO_x control option.

Selective Catalytic Reduction (SCR) – Selective catalytic reduction (SCR) systems involve the post-combustion removal of NO_x from flue gas with a catalytic reactor. Depending on the NO_x inlet concentration, SCR can reduce NO_x 80% or more and achieve levels as low as approximately 4 ppm NO_x (0.004 lb/MMBtu). SCR systems selectively reduce NO_x by injecting ammonia (NH_3) into the exhaust gas stream upstream of a catalyst. NO_x, ammonia, and oxygen react on the surface of the catalyst to form molecular nitrogen (N_2) and water. The primary chemical reactions are shown here.

$$4NO + 4NH_3 + O_2 \Rightarrow 4N_2 + 6H_2O$$

$$2NO_2 + 4NH_3 + O_2 \Rightarrow 3N_2 + 6H_2O$$

An SCR system is relatively expensive to build and operate and is composed of an ammonia storage tank, an injection grid consisting of a system of nozzles that spray ammonia into the exhaust gas ductwork, an SCR reactor, which contains the catalyst, instrumentation and electronic controls.

The heater exhaust gas must contain a minimum amount of oxygen and be within a particular temperature range in order for the selective catalytic reduction system to operate properly. The typical temperature range for base-metal catalysts is 600°F to

800°F. Keeping the exhaust gas temperature within this range is important. If it drops below 600°F, the reaction efficiency becomes too low and increased amounts of NO_x and ammonia will be released out the stack. If the reaction temperature gets too high, the catalyst is not as effective and the ammonia begins to decompose. The use of SCR is technically feasible and is carried forward to Step 3 in the BAT analysis.

Selective Non-Catalytic Reduction (SNCR) - Selective non-catalytic reduction (SNCR) systems are similar to SCR, except no catalyst is used. SNCR may use urea, aqueous ammonia, or anhydrous ammonia, which is usually vaporized and mixed with the hot flue gases from the combustion device. SNCR systems, in some instances, achieve approximately 40% reduction of NO_x but require very specific temperature and residence time characteristics of the heater to be feasible. Also, the effectiveness of SNCR decreases significantly in applications where the NO_x is already low. For this reason, SNCR is most commonly used in applications where the uncontrolled NO_x typically ranges from 200 ppm – 600ppm. The base NO_x performance of the proposed burners is substantially lower (40 ppm) than the level typically controlled by SNCR. Due to this perspective, the lack of SNCR installation on similar sources found in the RBLC data base, and the already low NO_x levels which can be achieved with BPH's proposed use of ultra-low NO_x burners, SNCR is not considered technically feasible and is not evaluated further in Step 3.

Step 3 – Rank Remaining Control Technologies by Control Effectiveness

From Step 2, there are two control technologies that are considered technically feasible, ultra-low NO_x burners and SCR. These available technologies are next ranked in order of effectiveness as shown in Table 5-3.

Table 5-3
BAT Control Hierarchy for NO_x

Technology	Emission Level Used in Analysis	
	ppm_v	lb/MMBtu
SCR + combustion controls	4	0.004
Combustion Control (ULNB)	40	0.04

Step 4 - Evaluate Most Effective Controls and Document Results

This step involves the consideration of energy, environmental, and economic impacts associated with each feasible control technology. The control options evaluated in detail for the BAT analysis were (1) combustion control (low NO_x burners), and (2) the combination of combustion control with SCR.

Costs: Separate cost estimates were generated for the Crude 1 Heaters (225 MMBtu/hr each) and the Vacuum 1 Heater (150 MMBtu/hr). These estimates utilized capital cost quotes from a previous refinery project, and were ratioed based on heater size (using accepted scaling algorithms). EPA factors were used to estimate Total Capital Investment and Annualized Costs. Table 5-4 summarizes these estimates and the details are included in Appendix C.

Other Toxic/Environmental/Energy Impacts: The ammonia used as a reagent in SCR has some negative side effects. Anhydrous ammonia is very hazardous if accidently released. Consequently, many users of SCR instead use aqueous ammonia (dissolved in water). The use of aqueous ammonia requires extra energy for vaporization of the ammonia. That extra energy creates additional emissions. Also, for maximum SCR effectiveness, some amount of excess ammonia must be added which results in a small “slip” of ammonia in the stack. This creates emissions of this toxic pollutant that would not otherwise occur. Also, a portion of the ammonia can react with sulfur in the stack forming ammonium sulfate or bisulfate solids, which increase particulate emissions. In many cases, these effects can be reasonably managed and their overall impacts can be small.

Table 5-4
Summary of Top-Down BAT Impact Analysis Results for
NO_x Controls for Crude 1 and Vac 1 Heaters

Emissions Unit	Control Alternative	Emissions (tpy)	Economic Impacts				Environmental Impacts		
			Emissions Reduction (b) (tpy)	Total Installed Capital Cost	Total Annualized cost (c) ($/yr)	Average Cost Effectiveness (d) ($/ton)	Toxics Impact (e) (Yes/No)	Adverse Environmental Impacts (Yes/No)	Energy Impact
Combined Crude 1 Heaters	Combustion Control + SCR	7.8	71	$6,106,767	$1,370,415	$19,313	Yes	No	None or small(a)
	Combustion Control at 0.04 lb/ MMBtu	78.8		--	--	--	No	No	No
Vac 1 Heaters	Combustion Control + SCR	2.6	23.7	$3,158,920	$684,846	$28,955	Yes	No	None or small(a)
	Combustion Control at 0.04 lb/ MMBtu	26.3		--	--	--	No	No	No

(a) If anhydrous ammonia is used there is no energy impact. If aqueous ammonia is used there is a small energy impact.
(b) Emissions reduction over baseline level
(c) Total annualized cost (capital, direct, and indirect) for purchasing installing, and operating the proposed control alternative.
(d) Average cost effectiveness is total annualized cost for the control option divided by the emissions reductions resulting from the option.
(e) Toxics impact means there is a toxics impact consideration for the control alternative.

Step 5 – Select BAT for NO_x Control

The final step in the top-down BAT analysis process is to select BAT. For this case, the final selection of BAT comes down to a question of the cost-effectiveness of the control options. Cost effectiveness is the economic criterion used to assess the potential for achieving an objective. Cost-effectiveness in a BAT determination is usually measured in terms of annual dollars of air pollution control device cost per tons of pollutant emissions removed by the control device. While there is no specific published value, a control technology costing approximately $10,000 per ton of pollutant controlled is a typical cut-off for cost-effectiveness for NO_x. As shown in Table 5-4, SCR is not considered cost-effective for the proposed heaters.

Due to the fact that SCR is not cost-effective, the next highest control option, if reasonable, is selected as BAT. Combustion controls at an emission rate of 0.04 lb NO_x/MMBtu fuel input on an annual average basis using ultra low NO_x burners is acceptable to BPH and is proposed as BAT for NO_x for the new Crude 1 and Vacuum 1 heaters.

5.2 BAT for SO_2 from Refinery Heaters

There are no MACT/BACT/LAER or RACT limits for SO_2 emissions that apply to the proposed new refinery heaters at the Crude/Vacuum 1 unit. There are, however, new NSPS limits on H_2S fuel sulfur levels that apply, and the project is proposing to install modifications at the Coker gas plant that will lower the total amount of SO_2 producing compounds in the refinery fuel gas. SO_2 is generated when sulfur-bearing fuels such as refinery fuel gas are combusted, and the H_2S and other sulfur species are oxidized to SO_2.

As described in the following paragraphs, BAT for SO_2 emissions from refinery heaters is proposed to be addressed by the following NSPS Ja requirement:

- Compliance with recently issued NSPS Ja which regulates SO_2 by limiting the allowable H_2S content of refinery fuel gas to no more than 162 ppm_v H_2S on a short term (3 hr average) basis and 60 ppm_v on a rolling annual basis.

The refinery utilizes MDEA (methyl diethanolamine) scrubbers to remove H_2S from the refinery fuel gas prior to combustion in any of the facilities heaters and boilers. This control technology is used throughout the refining industry and is extremely

effective at removing H_2S, the major sulfur species in refinery fuel gas. Prior to 2008, new and modified refinery heaters were required to comply with NSPS J standard of 162 ppm_v (3 hr average). In their recent update to the refinery NSPS Ja, US EPA considered requiring lower levels of H_2S. However, in the final rulemaking, US EPA kept the 162 ppm 3-hr average standard but also added a 60 ppm_v H_2S annual limit. As explained in their April 2008 Regulatory Impact Analysis[4], US EPA estimated the incremental costs to comply with this new annual H_2S standard was reasonable at $1,500 to $2,400/ton SO_2 reduced.

In their NSPS Ja Regulatory Impact Analysis, US EPA also considered a more stringent standard regulating all sulfur species instead of just H_2S. The option evaluated reflected a limit of 162 ppm_v TRS (total reduced sulfur) averaged over 3 hours and 60 ppm_v annual average. In their evaluation, US EPA determined that standard refinery amine systems could not comply with this TRS standard and that new separate treatment would be required. They estimated the costs of controlling TRS to these levels would incrementally cost $31,000 to $42,000 per ton of SO_2 reduced. US EPA judged this to be prohibitively expensive, and thus, did not impose any sulfur standards on refinery fuel gas besides the H_2S standard.

The estimated cost to control non-H_2S sulfur in refinery fuel gas is significantly higher than traditionally required for Ohio BAT, and should not be required as BAT. (Note: BPH has volunteered annual SO_2 limits on some of the refinery heaters that are stricter than the NSPS standard in order to provide assurance that SO_2 emissions will remain below PSD significance levels. These voluntary proposals are "beyond BAT" as demonstrated by US EPA's economic analysis. Accordingly, BPH proposes that compliance with the new NSPS Ja standard for H_2S of 162 ppm_v 3-hr and 60 ppm_v 365-day average should constitute Ohio BAT for SO_2 emissions from fuel gas used in the new refinery heaters.

BPH proposes the BAT permit limit for SO_2 be stated as compliance with the NSPS Ja fuel H_2S standard and not expanded to impose a lb/hr SO_2 emissions limit as explained below.

[4] Regulatory Impact Analysis for the Petroleum Refineries NSPS, EPA-452/R-08-002, April 2008.

There currently is insufficient data available at BPH or in the refining industry broadly to establish short-term concentration limits on non-H_2S sulfur in refinery fuel gas. BPH proposes to install new analyzers to measure total sulfur in the refinery fuel gas system. These analyzers will provide data regarding fluctuations in the total sulfur content of the BPH refinery fuel gas. However, at this time, there is inadequate data to establish short-term rate based limits on the total sulfur content of refinery fuel gas and a corresponding SO_2 emissions limit.

Additionally, the only regulatory driver that would relate to a lb/hr SO_2 limit is Ohio EPA's Best Available Technology (BAT) requirement in OAC 3745-31-05(A)(3). As discussed above, the refinery's MDEA (methyl diethanolamine) scrubber control technology is the same technology used throughout the refining industry and is routinely accepted as the best available for this purpose. The BAT limit needs to ensure use of these amine scrubbers to minimize H_2S to NSPS J and Ja levels. This purpose can be accomplished directly by the existing NSPS Subpart J and Ja requirement to monitor and maintain H_2S ppm below this level. BPH proposes that the BAT objective can be achieved by compliance with the applicable NSPS limit.

5.3 BAT for CO from Refinery Heaters

CO emissions depend on the efficiency of combustion. The less efficient the combustion, the more CO emissions will result as products of incomplete combustion. Process heaters are generally designed for good combustion because there is an economic incentive to ensure that fuel is not wasted. Additionally, gaseous fuel combusts efficiently and a heater burning only gaseous fuel can be designed to be highly efficient. The RBLC database was surveyed for recent determinations for CO emissions from refinery-fuel gas fired heaters. Table 5-5 shows these results. Permitted levels in these BACT determinations range from 0.04 – 0.08 lb/MMBtu using only good combustion practices. No other add-on control technologies for CO (or HAPs) were required for gas-fired heaters.

Therefore, BPH proposes good design and proper operation of the burners to serve as BAT for CO from the process heaters. AP-42 lists CO emissions at a level of 0.08 lb/MMBtu for natural-gas fired sources. The range in the RBLC for RFG-heaters is from 0.04-0.08 lb/MMBtu. BPH proposes the new heaters will limit CO to no more than 0.06 lb CO/MMBtu. This value is in the middle of the range reported in the RBLC as

BACT, and is less than AP-42. Based on our experience with similar heaters at the refinery, we think this is a reasonable and achievable value. BPH proposes a one-time stack test on the new heaters to demonstrate compliance.

Table 5-5
Snapshot of Database Survey Results -- CO Emission Controls for RFG-fired Heaters

Unit	Company	Capacity	Emission Limit	Control Method	State	Basis	Permit No. Date
Multiple Refinery Heaters and Boilers	Marathon Petroleum Co. LLC, Garyville Refinery	86-540 MMBtu/hr	0.04 lb/MMBtu (stack test or 30-day rolling average)	Proper Design, Operation, and Good Engineering Practices	LA	BACT/ MACT	PSD-LA-719 12/27/2006
Multiple Refinery Heaters	Valero Refining LLC, St. Charles Refinery	68-715 MMBtu/hr	0.08 lb/MMBtu (stack test)	Proper Equipment Design and Operation, Good Combustion Practices	LA	BACT	PSD LA-619 (MA) 11/17/2009
Unit 40 Boiler	Conoco-Phillips Borger Refinery	598 MMBtu/hr	100 PPM (~0.07 lb/MMBtu)	Good Combustion Practices	TX	BACT	9868A 12/20/2006

5.4 BAT for VOC from Refinery Heaters

The rate of VOC emissions depends on combustion efficiency. Combustion efficiency is typically very high with gaseous fuels and VOC emissions are extremely low – too low to even be reliably detected in testing. VOC emissions are minimized by using good combustion practices, which incorporate high combustion temperatures, long resident times, and turbulent mixing of fuel and combustion air. For these reasons, BPH proposes that additional controls would not be cost-effective. As with CO, BAT for VOC is proposed to be good combustion practices for the new heaters.

5.5 BAT for PM/PM_{10}/$PM_{2.5}$ from Refinery Heaters

PM, PM_{10}, and $PM_{2.5}$ emission rates from gas-fired process heaters are inherently low because they achieve high combustion efficiencies and burn clean fuels. In fact, outlet PM emissions from gas-fired combustion sources are usually so low that they are difficult to measure with high accuracy and repeatability using standard EPA approved methods. Outlet loadings are far too low to justify any type of add-on PM control devices such as an electrostatic precipitator, baghouse, or cyclone. For these reasons, good heater design and operation is recognized as BAT for particulate emissions from the gas-fired process heaters. Additionally, use of the proposed BAT for NO_x and SO_2 will help reduce emissions of these precursors to particulate.

5.6 BAT for VOC from Coker 3 Coke Drum Vent

There are no MACT/BACT/LAER or RACT limits for VOC emissions that apply to the coking unit, Coker 3, drum vent. However, the new NSPS Ja standards require cokers to be depressure through a closed system until the coke drum pressure is not more than 5 pounds per square inch gauge (psig) before venting the drum to the atmosphere during the coke removal process.

The BPH Toledo Refinery currently does not vent to the atmosphere until the coke drums have depressured to about 3 psig. Proposed modifications to the blowdown system will enable the refinery to reduce this pressure to not more than 2 psig before venting the coke drums to the atmosphere. This limit is consistent with industry leading practice and is more stringent than required by NSPS. Therefore, as BAT for VOC emissions control from the coke drums, BPH proposes to reduce the drum pressure to not more than 2 psig prior to venting the drums to atmosphere during the coke removal process.

5.7 BAT for VOC from Fugitive Equipment Leaks (Coker 3, CV1, AHDT Units)

Small leaks from the seals of pumps and the stem packing of valves are the main source of fugitive VOC emissions. The new piping components of the modifications at Coker 3 and other modified units are designed not to leak, but statistically, a few leaks are expected to occur from time to time. As required by multiple regulations, all new fugitive emission components will be integrated into the BPH Leak Detection and Repair (LDAR) program. This program is designed to comply with applicable NSPS Subpart GGG, Subpart GGGa and Refinery MACT Subpart CC standards. The LDAR program promptly identifies leaking components and institutes a schedule for the repair. Such an LDAR program is industry best practice and is the only technically feasible method of controlling VOC emissions from equipment leaks. In addition, BPH plans to use low leak valves and packing for the new components provided they are commercially available. Compliance with the applicable NSPS GGGa and Refinery MACT (CC) LDAR regulations is proposed as BAT for fugitive VOC emissions from components.

6.0 Permit Application Forms

The Ohio EPA Permit application forms were completed and are included in the Application created and submitted through the OEPA Air Services web portal.