INSTRUCTIONS FOR INSERTING SUPPLEMENT NO. 1

INTO

REASONABLY AVAILABLE CONTROL MEASURES

FOR FUGITIVE DUST SOURCES

- Page i replaces same. Minor revision to table of contents.

- Pages v through viii, and xiii through xvii replace same. Addition of new figures and tables for Section 2.7.

- Pages 2-214 through 2-231g replace pages 2-214 through 2-231a and the four unnumbered pages in the appendix for Section 2.7. Major revision of entire section due primarily to the comments of the Ohio Cast Metals Federation (OCMF).

- Pages 2-232 through 2-241d replace pages 2-232 through 2-241 and the four unnumbered pages in the appendix for Section 2.8. Major revision of entire section due primarily to the comments of OCMF.

- Pages 2-471 through 2-489e replace pages 2-471 through 2-489 and the three unnumbered pages in the appendix for Section 2.22. Minor revision based on comments of the Ohio Ready Mix Concrete Association. Major revision to cost-benefit calculations.

- Pages A-2 and A-3 replace same. Cost indices updated, scale factor equation added, and minor revision.

- Page B-1 replaces same. Editorial changes.

- Pages B-6 through B-8 replace page B-6. Addition of more chemical dust suppressant suppliers.

SUPPLEMENT NO. 1

FOR

REASONABLY AVAILABLE CONTROL MEASURES FOR FUGITIVE DUST SOURCES

Ohio Environmental Protection Agency

Division of Air Pollution Control

Engineering Section

361 East Broad Street

Columbus, Ohio 43216

August, 1983

CONTENTS

	Page
Figures	iii
Tables	xi
1.0 Introduction	1-1
2.0 Reasonably Available Control Measures (RACM)	2-1
2.1 General Fugitive Dust Sources	2-3
2.1.1 Plant Roadways and Parking Areas	2-6
2.1.2 Aggregate Storage Piles	2-26
2.1.3 Material Handling	2-53
2.1.4 Mineral Extraction	2-65
2.2 Iron and Steel Mills	2-93
2.2.1 Coke Manufacturing	2-93
2.2.2 Iron Production	2-113
2.2.3 Steel Manufacture	2-134
2.3 Lime Plants	2-154
2.4 Power Plants	2-172
2.5 Grain Terminals	2-184
2.6 Country Grain Elevators	2-203
2.7 Iron Foundries	2-214
2.8 Steel Foundries	2-232
2.9 Glass Manufacturing Plants	2-242
2.10 Fiberglass Manufacturing	2-257
2.11 Secondary Aluminum Processing Plants	2-266
2.12 Fertilizer Mixing/Blending Plants	2-277
2.13 Cement Manufacturing and Blending Plants	2-289

CONTENTS (continued)

		Page
2.14	Ferroalloy Production	2-306
2.15	Metal Salvage Operations	2-320
2.16	Pulp and Paper Mills	2-329
2.17	Woodworking Operations	2-337
2.18	Aggregate Processing Plants	2-358
2.19	Coal Processing Plants	2-403
2.20	Brick and Related Clay Product Manufacturing Plants	2-445
2.21	Asphaltic Concrete Plants	2-459
2.22	Concrete Batching Plants	2-471
2.23	Sandblasting Operations	2-490
2.24	Petroleum Refineries	2-505
2.25	Agricultural Chemical Manufacturing Plants	2-513
2.26	Bulk Gasoline Terminals and Plants	2-524
2.27	Carbon Black Plants	2-532
2.28	Municipal Incineration	2-541
2.29	Salt Processing Operations	2-560
2.30	Galvanizing Plants	2-572
Appendix A:	Cost Estimation Guidelines for RACM for Fugitive Dust	A-1
Appendix B:	Listing of Chemical Dust Suppressants	B-1

FIGURES (continued)

Number		Page
2.5-16	Rack Dryer with Screen Filter	2-194a
2.5-17	Truck Loading Control System	2-194b
2.5-18	Boxcar Loading Control System	2-194c
2.5-19	Hopper Car Loading Control System	2-195a
2.5-20	Barge or Ship Loading Control System	2-195b
2.6-1	Simplified Process Flow Diagram for Country Grain Elevators and Associated Fugitive Particulate Emission Sources	2-204
2.6-2	Diagram of an Upright Country Grain Elevator	2-204a
2.7-1	Simplified Process Flow Diagram for Iron Foundries and Associated Fugitive Particulate Emission Sources	2-215
2.7-2	Iron Foundry Process Flow Diagram	2-215a
2.7-3	Cupola Furnace	2-215b
2.7-4	Electric Arc Furnace	2-216a
2.7-5	Channel Electric Induction Furnace	2-216b
2.7-6	Coreless Electric Induction Furnace	2-216c
2.7-7	Reverberatory Furnace	2-216d
2.7-8	Magnesium Treatment Methods for Producing Ductile Iron	2-216e
2.7-9	Sand Muller	2-217a
2.7-10	Building Evacuation System	2-223a
2.7-11	Mobile Tapping Hoods	2-223b
2.7-12	Hooded Pouring Station	2-224a
2.7-13	Movable Pouring Hood	2-224b
2.7-14	A Casting Shakeout Control System	2-224c
2.7-15	Capture Design for a Typical Sand-Handling System	2-224e

FIGURES (continued)

Number		Page
2.8-1	Simplified Process Flow Diagram for Steel Foundries and Associated Fugitive Particulate Emission Sources	2-233
2.9-1	Simplified Process Flow Diagram for Manufacture of Soda-Lime Glass and Associated Fugitive Particulate Emission Sources	2-243
2.9-2	Side-Port Continuous Regenerative Furnace	2-245
2.9-3	End-Port Continuous Regenerative Furnace	2-246
2.10-1	Simplified Process Flow Diagram of Fiberglass Manufacture and Associated Fugitive Particulate Emission Sources	2-258
2.11-1	Simplified Process Flow Diagram for Secondary Aluminum Processing Plants and Associated Fugitive Particulate Emission Sources	2-267
2.12-1	Typical Flow Diagram for Fertilizer Mixing/ Blending Facilities and Associate Fugitive Particulate Emission Sources	2-278
2.12-2	Bulk Loading Station With Elevated Storage Used in Fertilizer Mixing/Blending Plants	2-280
2.12-3	A Bulk Blending Plant With Fugitive Dust Emission Controls Consisting of Skirts Around Railcar Unloading and a Series of Hoods Ducted to a Fabric Filter	2-283a
2.12-4	Dust Suppressant Application System	2-283b
2.12-5	Bucket Elevators Used at Bulk Blending Plants	2-286a
2.13-1	Typical Rotary Ball Mill Configuration	2-292
2.13-2	Simplified Process Flow Diagram for Portland Cement Production and Associated Fugitive Particulate Emission Sources	2-293
2.14-1	Simplified Process Flow Diagram for Ferroalloy Production and Associated Fugitive Particulate Emission Sources	2-307
2.14-2	Submerged-Arc Furnace for Ferroalloy Production	2-309
2.15-1	Process Schematic for Metal Salvage/Auto Shredding Illustrating Potential Fugitive Particulate Emission Points	2-321

FIGURES (continued)

Number		Page
2.16-1	Simplified Process Flow Diagram for Raw Material Preparation for Wood Pulping Processes at Pulp and Paper Mills, and Associated Fugitive Particulate Emission Sources	2-330
2.16-2	Typical Kraft Sulfate Pulping and Recovery Process	2-332
2.17-1	Cross-Section of a Typical Wood Hogging Machine	2-341
2.17-2	Simplified Process Flow Diagram for Wood-working Operations at Several Wood Product Manufacturing Plants and Associated Fugitive Particulate Emission Sources	2-342
2.17-3	Cement-Receiving and Storage System	2-350
2.18-1	Simplified Process Flow Diagram for Sand and Gravel Processing Plants and Associated Fugitive Particulate Emission Sources	2-360
2.18-2	Simplified Process Flow Diagram for Crushed Stone Processing and Associated Fugitive Particulate Emission Sources	2-361
2.18-3	Simplified Process Flow Diagram for Slag Processing and Associated Fugitive Particulate Emission Sources	2-362
2.18-4	Double-Toggle Jaw Crusher	2-366
2.18-5	Single-Toggle Jaw Crusher	2-367
2.18-6	Pivoted-Spindle Gyratory Crusher	2-368
2.18-7	Cone Gyratory Crusher	2-368
2.18-8	Single-Roll Crusher	2-369
2.18-9	Double-Roll Crusher	2-370
2.18-10	Hammermill Crusher	2-370
2.18-11	Impact Crusher	2-371
2.18-12	Vibrating Grizzly	2-372
2.18-13	Vibrating Screen	2-372
2.18-14	Belt Conveyor Transfer Point	2-374
2.18-15	Types of Bucket Elevators	2-375

FIGURES (continued)

Number		Page
2.18-16	Wet Dust-Suppression System	2-385
2.18-17	Wet Dust-Suppression Application at a Crusher Discharge Point	2-387
2.18-18	Hood Configuration for a Transfer Point Having a Free-Fall Distance Less Than 3 Feet	2-388
2.18-19	Hooding Configuration for a Transfer Point Having a Free-Fall Distance Greater Than 3 Feet	2-389
2.18-20	A Combination Control System Consisting of Wet Suppression and Dry Collection	2-390
2.19-1	Simplified Process Flow Diagram for Coal Processing Plants and Associated Fugitive Particulate Emission Sources	2-405
2.19-2	A Coal Sizing Circuit at a Coal Preparation Plant	2-408
2.19-3	Rotary Breaker	2-409
2.19-4	Hammermill	2-410
2.19-5	Single-Roll Coal Crusher	2-411
2.19-6	Double-Roll Coal Crusher	2-411
2.19-7	Ring Coal Crusher	2-411
2.19-8	Pneumatic Cleaning Circuit	2-414
2.19-9	Air Table	2-415
2.19-10	Jig-Table Cleaning Circuit	2-416
2.19-11	Air-Pulsated Jig	2-417
2.19-12	Deister Table	2-417
2.19-13	Heavy-Media Cleaning Circuit	2-419
2.19-14	Heavy-Media Cyclone	2-420
2.19-15	Water Clarification Circuit	2-421
2.19-16	Froth Flotation Unit	2-423
2.19-17	Screen-Type Thermal Coal Dryer	2-425
2.18-18	Cascade Thermal Coal Dryer	2-425

TABLES (continued)

Number		Page
2.2.2-2	A Summary of the Control Alternatives, Efficiencies and Costs, and the RACM Selections for Fugitive Dust Emissions from Sources in Iron Production	2-125,126, 2-127,128
2.2.3-1	Fugitive Dust Emission Factors for Steel Manufacturing	2-141
2.2.3-2	A Summary of the Control Alternatives, Efficiencies and Costs, and the RACM Selections for Fugitive Dust Emissions from Sources in Steel Manufacturing	2-147,148
2.3-1	Fugitive Dust Emission Factors for Lime Manufacturing	2-158
2.3-2	A Summary of the Control Alternatives, Efficiencies and Costs, and the RACM Selections for Fugitive Dust Emissions from Lime Plants	2-163,164,165
2.4-1	Fugitive Dust Emission Factors for Coal-Fired Power Plants	2-175
2.4-2	A Summary of the Control Alternatives, Efficiencies and Costs, and the RACM Selections for Fugitive Dust Emissions from Sources at Coal-Fired Power Plants (500 MW)	2-178,179,180
2.5-1	Fugitive Dust Emission Factors for Grain Terminals	2-188
2.5-2	Particulate Size Distribution for Dust from an Elevator Leg Cyclone (Inlet Test)	2-190
2.5-3	A Summary of the Control Alternatives, Efficiencies and Costs, and the RACM Selections for Fugitive Dust Emissions from Sources at Grain Terminals	2-196,197
2.6-1	Fugitive Dust Emission Factors for Country Grain Elevators	2-207
2.6-2	Particulate Size Distribution for Dust from an Elevator Leg Cyclone (Inlet Test)	2-209
2.6-3	A Summary of the Control Alternatives, Efficiencies and Costs, and the RACM Selections for Fugitive Dust Emissions from Sources at Country Grain Elevators	2-210,210a
2.7-1	Fugitive Dust Emission Factors for Iron Foundries	2-219

TABLES (continued)

Number		Page
2.7-2	Particulate Emission Characteristics for Various Foundry Operations	2-221,221a
2.7-3	Chemical Composition of Cupola Dust	2-221b
2.7-4	Particle Size Distribution of Dust Emissions from Both Cold and Hot Blast Cupola Furnace Stacks	2-221b
2.7-5	Size Distribution for Particulate Emissions from Eighteen Cupola Furnace Installations	2-221b
2.7-6	Chemical Analysis of Particulate Emissions from an Electric Arc Furnace	2-221c
2.7-7	Particle-Size Distribution for Particulate Emissions from Three Electric-Arc Furnace-Installations	2-221d
2.7-8	A Summary of the Control Alternatives, Efficiencies and Costs, and the RACM Selections for Fugitive Dust Emissions from Sources at Iron Foundries	2-226,227,228
2.8-1	Fugitive Dust Emission Factors for Steel Foundries	2-235
2.8-2	A Summary of the Control Alternatives, Efficiencies and Costs, and the RACM Selections for Fugitive Dust Emissions from Sources at Steel Foundries	2-237,238
2.9-1	Fugitive Dust Emission Factors for Glass Manufacturing Plants	2-249
2.9-2	A Summary of the Control Alternatives, Efficiencies and Costs, and the RACM Selections for Fugitive Dust Emissions from Sources at Glass Manufacturing Plants	2-251
2.10-1	Fugitive Dust Emission Factors for Fiberglass Manufacturing	2-260
2.10-2	A Summary of the Control Alternatives, Efficiencies and Costs, and the RACM Selections for Fugitive Dust Emissions from Sources at Fiberglass Manufacturing Plants	2-262
2.11-1	Fugitive Dust Emission Factors for Secondary Aluminum Processing Plants	2-271
2.11-2	Effluent Characteristics from Secondary Aluminum Production	2-270

TABLES (continued)

Number		Page
2.11-3	A Summary of the Control Alternatives, Efficiencies and Costs, and the RACM Selections for Fugitive Dust Emissions from Sources at Secondary Aluminum Processing Plants	2-274,274a
2.12-1	Fugitive Dust Emission Factors for Fertilizer Mixing/Blending Plants	2-282
2.12-2	A Summary of the Control Alternatives, Efficiencies and Costs, and the RACM Selections for Fugitive Dust Emissions from Sources at Fertilizer Mixing and Blending Plants	2-284,285
2.13-1	Raw Materials Used in Producing Portland Cement in the United States	2-290
2.13-2	Fugitive Dust Emission Factors for Cement Production	2-295
2.13-3	A Summary of the Control Alternatives, Efficiencies and Costs, and the RACM Selections for Fugitive Dust Emissions from Sources at Cement Manufacturing and Blending Plants	2-301,302,303
2.14-1	Fugitive Dust Emission Factors for Ferroalloy Production	2-311
2.14-2	A Summary of the Control Alternatives, Efficiencies and Costs, and the RACM Selections for Fugitive Dust Emissions from Sources at Ferroalloy Production Plants	2-314,315
2.15-1	A Summary of the Control Alternatives, Efficiencies and Costs, and the RACM Selections for Fugitive Dust Emissions from Sources at Metal Salvage Operations	2-323,324
2.17-1	Fugitive Dust Emission Factors for Woodworking Operations	2-344
2.17-2	Approximate Size Range of Typical Components of Wood Fuel	2-346
2.17-3	A Summary of the Control Alternatives, Efficiencies and Costs, and the RACM Selections for Fugitive Dust Emissions from Sources in Woodworking Operations	2-352,353,354
2.18-1	Fugitive Dust Emission Factors for Aggregate Processing Plants	2-378,379
2.18-2	A Summary of the Control Alternatives, Efficiencies and Costs, and the RACM Selections for Fugitive Dust Emissions from Aggregate Processing Plants	2-395,396,397

TABLES (continued)

Number		Page
2.19-1	Coal Size Ranges for Cleaning Equipment	2-412
2.19-2	Fugitive Dust Emission Factors for Coal Processing Plants	2-431
2.19-3	A Summary of the Control Alternatives, Efficiencies and Costs, and the RACM Selections for Fugitive Dust Emissions from Coal Processing Plants	2-437,438,439,44
2.20-1	Fugitive Dust Emission Factors for Brick and Related Clay Product Manufacturing Plants	2-453
2.20-2	A Summary of the Control Alternatives, Efficiencies and Costs, and the RACM Selections for Fugitive Dust Emissions from Brick and Related Clay Product Manufacturing Plants	2-456
2.21-1	Fugitive Dust Emission Factors for Asphaltic Concrete Manufacturing	2-465
2.22-1	Fugitive Dust Emission Factors for Concrete Batching Plants	2-474
2.22-2	Physical Characteristics of Three Common Grades of Cement	2-475
2.22-3	A Summary of the Control Alternatives, Efficiencies and Costs, and the RACM Selections for Fugitive Dust Emissions from Concrete Batching Plants	2-484,485,486
2.23-1	Fugitive Dust Emission Factors for Sandblasting Operations	2-495
2.23-2	Typical Size Distribution of Fugitive Dust Particles as a Result of Sandblasting	2-496
2.23-3	A Summary of the Control Alternatives, Efficiencies and Costs, and the RACM Selections for Fugitive Dust Emissions from Sandblasting Operations	2-501
2.25-1	Fugitive Dust Emission Factors for Urea Manufacturing	2-518
2.25-2	A Summary of the Control Alternatives, Efficiencies and Costs, and the RACM Selections for Fugitive Dust Emissions from Agricultural Chemical Manufacturing Plants	2-521

TABLES (continued)

Number		Page
2.27-1	A Summary of the Control Alternatives, Efficiencies and Costs, and the RACM Selections for Fugitive Dust Emissions from Carbon Black Plants	2-538
2.28-1	Fugitive Dust Emission Factors for Municipal Incineration	2-545
2.28-2	Range in Composition of Residential Solid Wastes in 21 U.S. Cities	2-547
2.28-3	Typical Composition of Municipal Solid Waste	2-548
2.28-4	Examples of Hazardous Wastes in Municipal Solid Waste	2-550
2.28-5	Physical Properties of Particles Leaving Furnace	2-551
2.28-6	Chemical Analysis of Flyash Samples from South Shore Incinerator, New York City, by Source	2-552
2.28-7	Spectrographic Analysis of Ashed Incinerator Particulate Matter	2-553
2.28-8	A Summary of the Control Alternatives, Efficiencies and Costs, and the RACM Selections for Fugitive Dust Emissions from Municipal Incineration	2-556
2.29-1	Specification Guidelines for Different Grades of Salt	2-561
2.29-2	A Summary of the Control Alternatives, Efficiencies and Costs, and the RACM Selections for Fugitive Dust Emissions from Salt Processing Operations	2-568,569
2.30-1	Fugitive Dust Emission Factors for Galvanizing Plants	2-577
2.30-2	Chemical Analyses of the Fumes Collected by a Baghouse and by an Electrostatic Precipitator from Zinc Galvanizing Kettles	2-579
2.30-3	A Summary of the Control Alternatives, Efficiencies and Costs, and the RACM Selections for Fugitive Dust Emissions from Sources at Galvanizing Plants	2-583

2.7 IRON FOUNDRIES

2.7.1 Process Description[1-7]

Foundries produce castings for automotive parts, light and heavy machinery, pipe and a wide range of miscellaneous products. The process involves melting scrap metal and/or pig iron (crude iron in the form of blocks weighing about 100 pounds) and pouring the molten metal into prepared molds. The two major categories are "iron" foundries and "steel" foundries. Iron foundries may be further subdivided into "gray iron", "malleable iron" and "ductile iron" foundries. Both iron and steel consist primarily of elemental iron but with differing carbon content. Iron contains 2 to 4 percent carbon, and steel contains 1 percent or less. Iron formulations also incorporate various amounts of other elements. For example, silicon content is generally in the range of 2 to 3 percent in iron formulations.[8] Steel may also contain alloying elements.

Iron foundries may be further classified as either "captive" or "jobbing" foundries. A captive foundry is one that is a regular operating element of a manufacturing establishment and whose castings are generally made for the products of the parent company. In contrast, a jobbing foundry is one that manufactures a variety of castings which are not used in its own products, but are made for the products of other companies.

Figures 2.7-1 and 2.7-2 illustrate the process flow in a typical iron foundry. The basic process flow is essentially the same regardless of whether the foundry is captive or job shop. About 70 percent of the iron melted in the U.S. is produced in a cupola furnace.[9] Cupola capacities range from 1 to 100 tons of molten metal per hour. Over 60 percent operate in the range of 3 to 11 tons per hour. (Figure 2.7-3 illustrates a typical cupola furnace.) The other types of furnaces used in iron foundries are

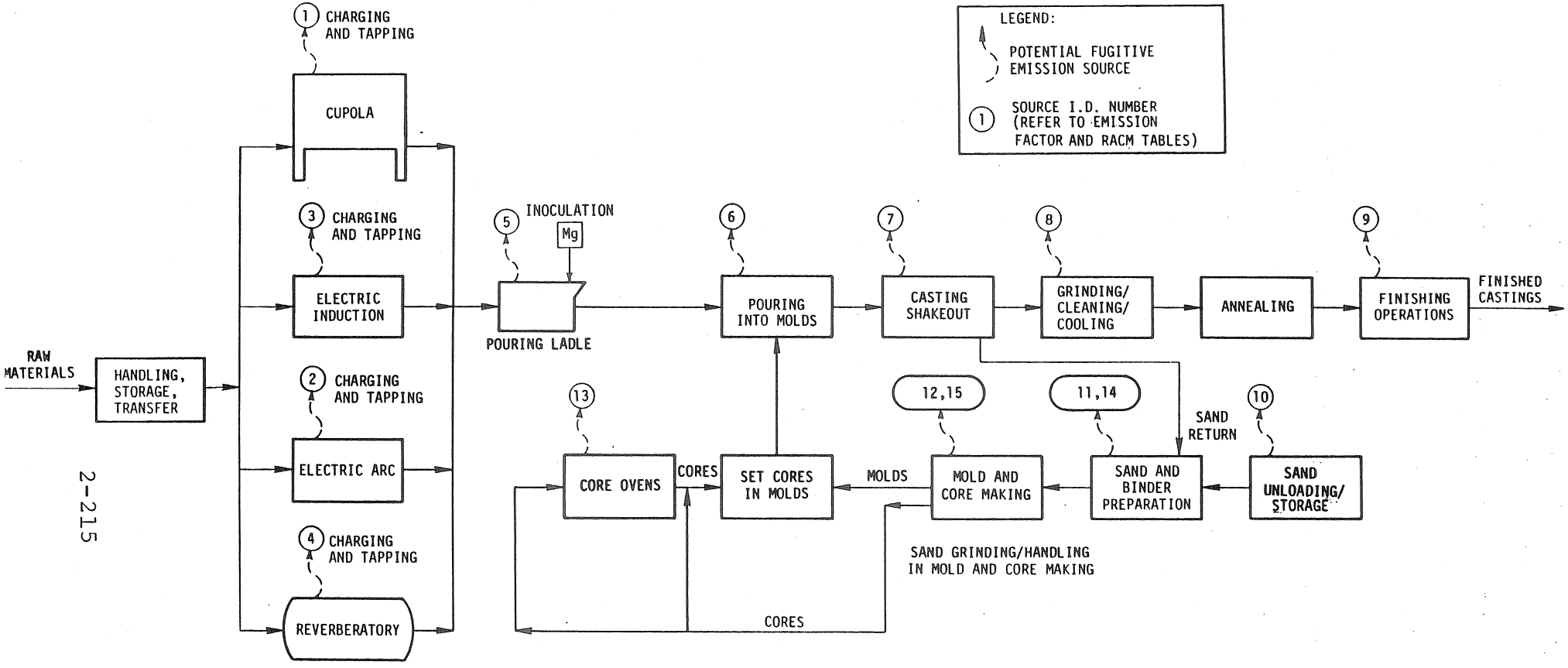

Figure 2.7-1. Simplified process flow diagram for iron foundries and associated fugitive particulate emission sources.

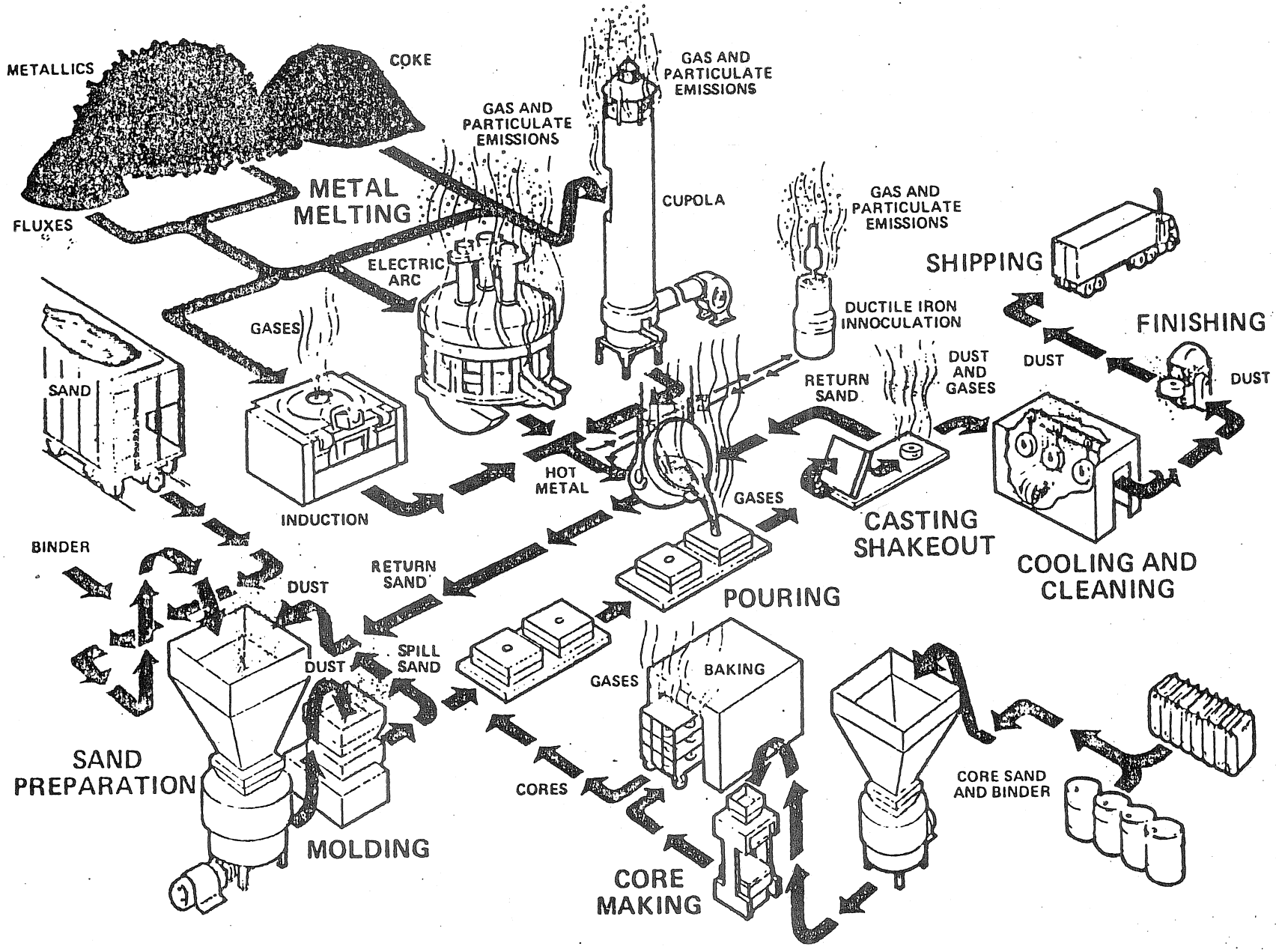

Figure 2.7-2. Iron foundry process flow diagram.[10]

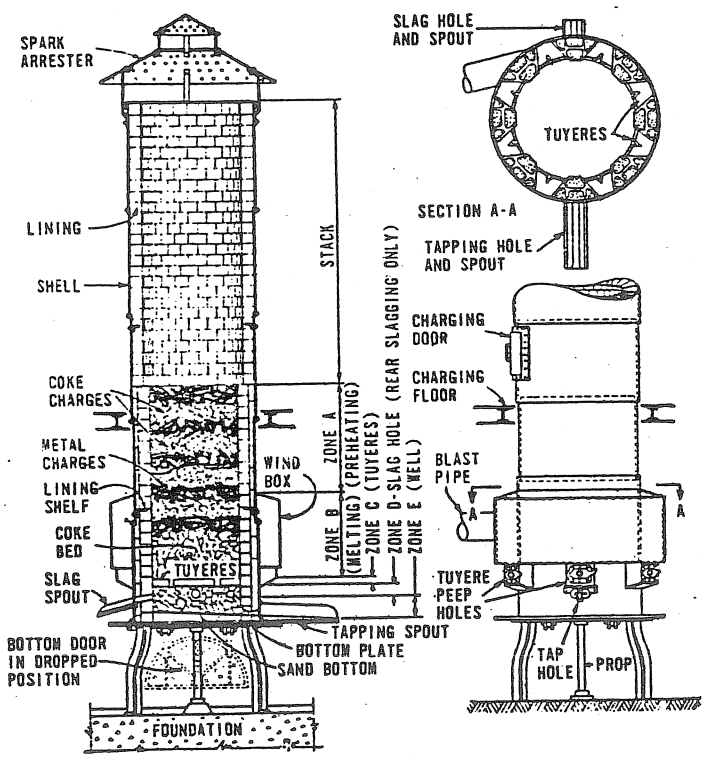

Figure 2.7-3. Cupola furnace.[11]

electric arc, electric induction and reverberatory. (These furnaces are shown in Figures 2.7-4 to 2.7-7.)

Raw materials are charged into the cupola through a door in the top of the furnace. The raw materials consist of iron and/or steel scrap, pig iron, flux materials, ferrosilicon and coke. Fluxes are limestone or similar minerals, that absorb impurities after the charge has melted. Coke is essentially pure carbon in lump form. The burning of the coke provides the heat to melt the raw materials. As the charge melts, it descends to the bottom of the furnace where the molten metal product is drained out periodically. Fresh raw materials are added to keep the furnace full. Operation of cupola furnaces can be done on a continuous basis.

The charge for electic arc, electric induction and reverberatory furnaces consists mainly of iron and/or steel scrap, pig iron and limestone. The reverberatory furnace is heated by firing gas or oil. These furnaces are operated on a batch basis.

The molten metal is tapped from the furnace at a temperature of about 2900°F into a ladle or into a holding furnace until it is ready to be drained into a ladle. The ladle is transported to the mold line, and molten metal is poured into prepared molds. The molds contain the molten iron within the mold form until it solidifies. In production of high strength ("ductile iron") castings, magnesium is added to the molten iron by a process called inoculation. (See Figure 2.7-8 for an illustration of the magnesium treatment methods used to produce ductile iron.) After solidification, the sand molds and castings are separated, and the sand is recycled to the mold making operation. Castings are shaken out of the molds, or the molds are broken away from the castings. When sufficiently

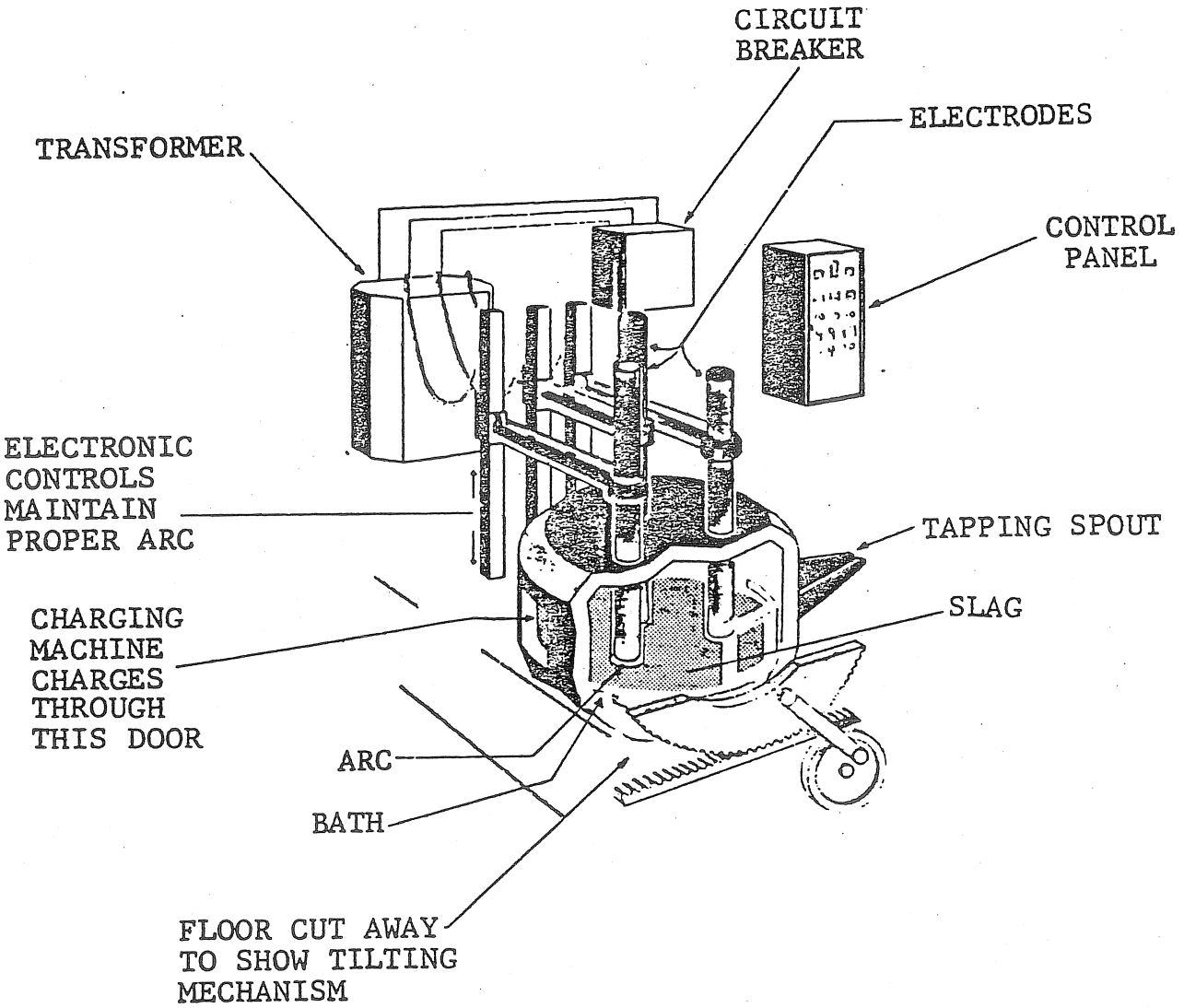

Figure 2.7-4. Electric arc furnace.[12]

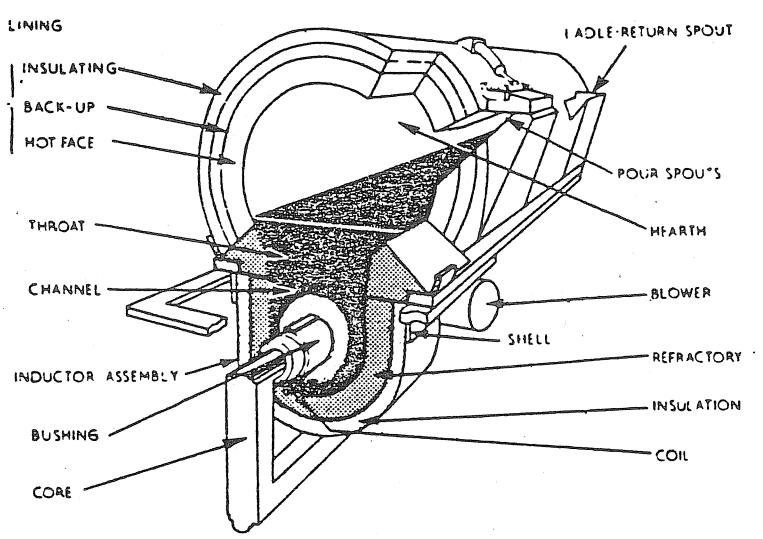

Figure 2.7-5. Channel electric induction furnace.[13]

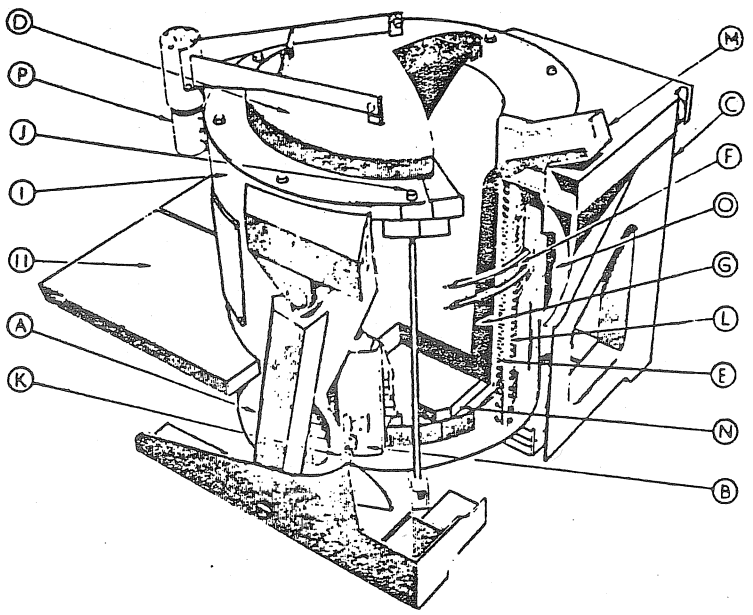

A. HYDRAULIC TILT CYLINDERS
B. SHUNTS
C. STANCHION
D. COVER
E. COIL
F. LEADS
G. WORKING REFRACTORY
H. OPERATOR'S PLATFORM
I. STEEL SHELL
J. TIE RODS
K. CLAMPING BOLTS
L. COIL SUPPORT
M. SPOUT
N. REFRACTORY BRICK
O. ACCESS PORT
P. LID HOIST MECHANISM

Figure 2.7-6. Coreless electric induction furnace.[14]

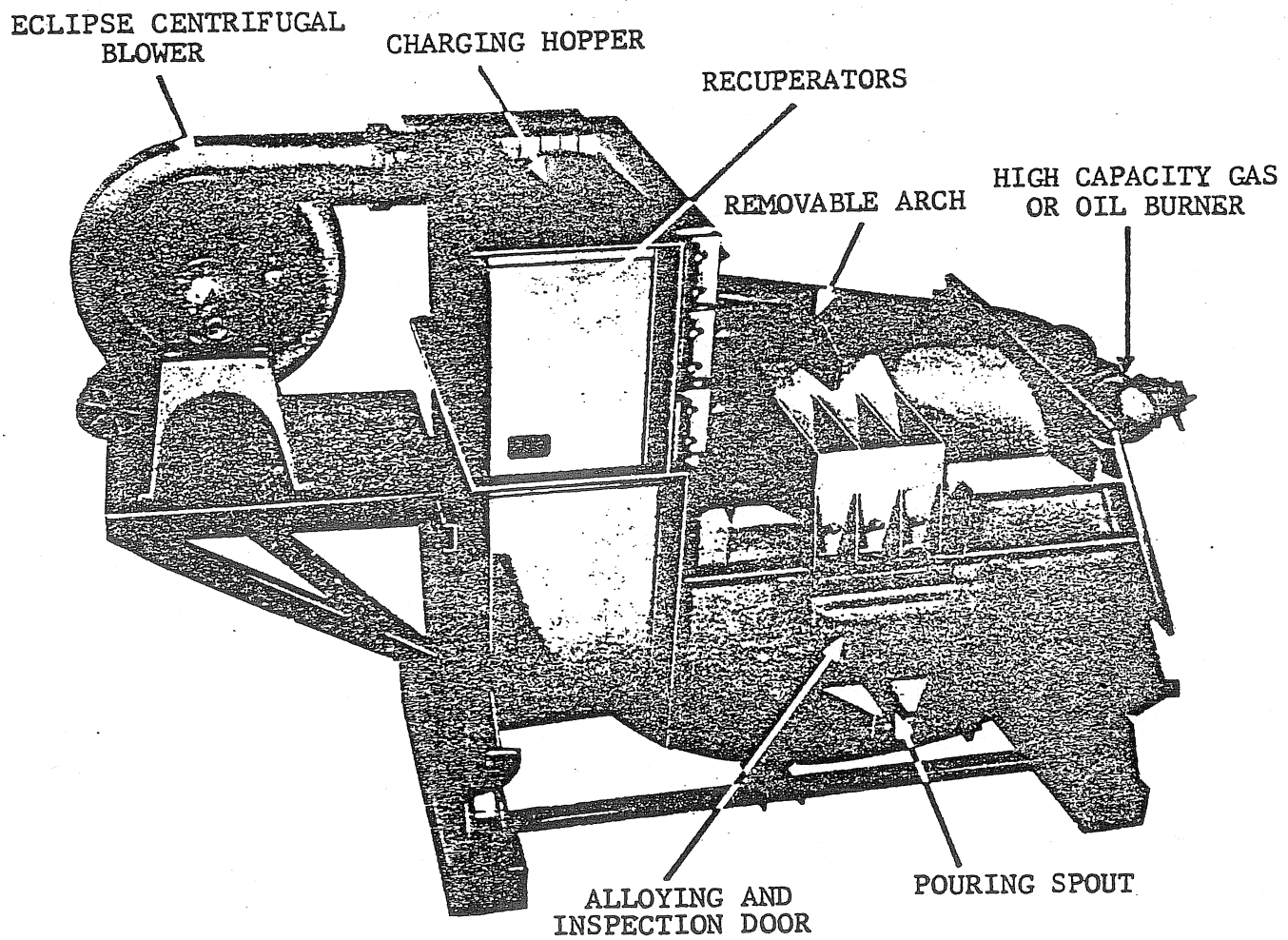

Figure 2.7-7. Reverberatory furnace.[15]

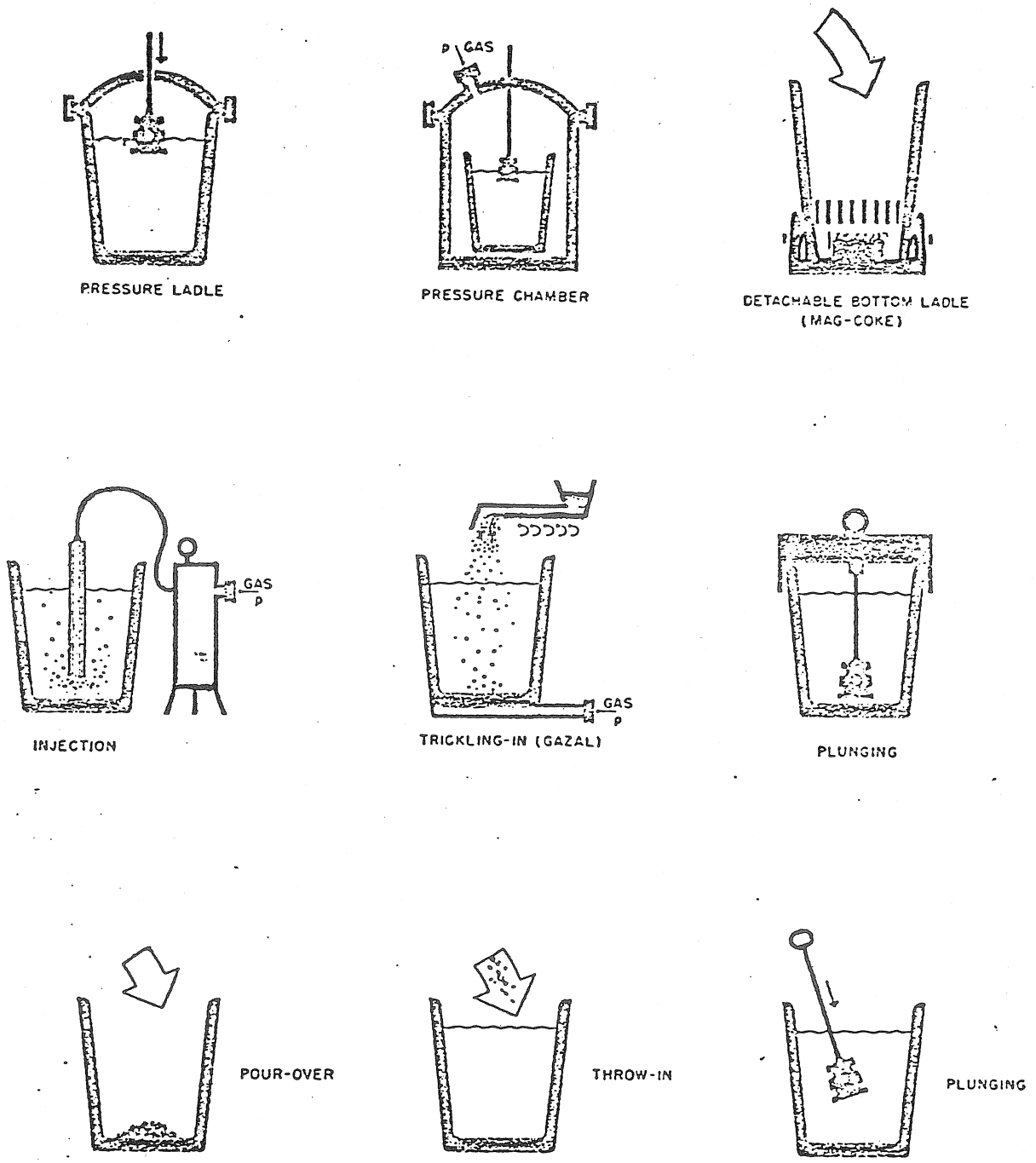

Figure 2.7-8. Magnesium treatment methods for producing ductile iron.[16]

cool, the castings are cleaned by shot blasting, and the remaining excess metal (gates, sprue, risers, flash, etc.) is removed by sawing, grinding, chipping, cutting, etc. These processes are generally housed in an enclosure.

Castings intended for certain uses may be annealed (heat treated) for several hours at temperatures of 1000 to 1600°F. Heat treating furnaces, fired by gas, oil or electricity, are referred to by such names as "annealing", "hardening", "car-bottom" and "traveling hearth" furnaces. Castings that have been annealed in the present of sufficient silicon are referred to as malleable iron castings. Some ductile iron castings, which are produced by inoculating the melt with a small amount of magnesium just prior to casting, are also often subjected to annealing. Finishing operations such as shot or sand blasting, grinding and surface coating may follow the heat treatment.

Production of molds and cores is an integral part of the foundry operation. A mold is made of sand mixed in a muller (see Figure 2.7-9) with water and binders, such as clay or resins. Pitch is sometimes added to the mold mixture primarily to prevent surface defects on the castings. A core is a separable part of the mold used to form a cavity in the casting. Cores are also made of sand and binders. Cores may be produced by any one of a number of processes including hot box, cold box, air set, shell and oil-sand methods.[17] In the oil-sand process, after the cores are formed in the desired shape, they are cured either in a baking oven (core oven) at 300-500°F or at room temperature. Curing evaporates moisture and hardens the sand mixture. Core ovens are fired with gas or oil.

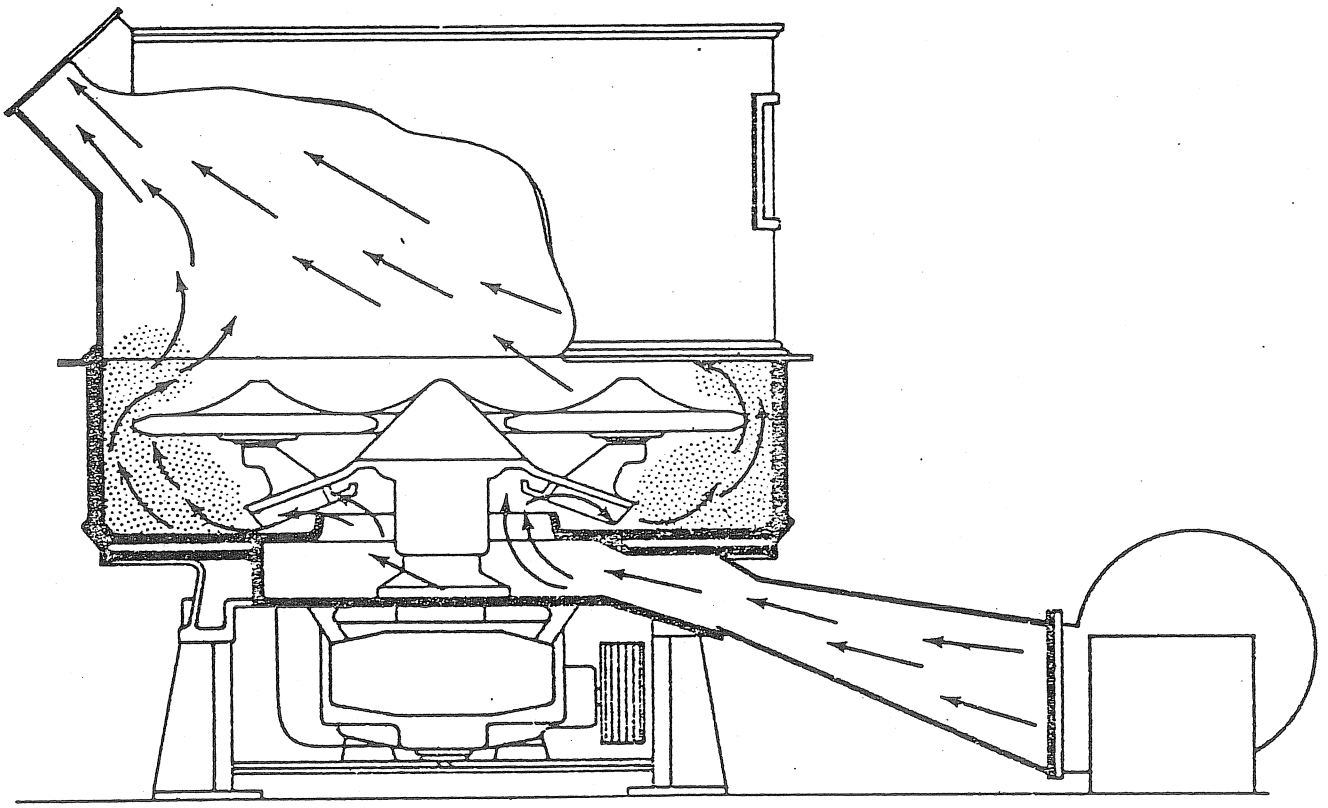

Figure 2.7-9. Sand muller.[18]

The potential sources of fugitive emissions in iron foundries include raw material receiving, storage and handling, melting furnace charging and tapping, iron inoculation, molten iron transporting and pouring, casting, shakeout, cooling, cleaning and finishing, and core and mold making. Each of these sources is identified in Figures 2.7-1 and 2.7-2.

2.7.2 Fugitive Dust Emission Factors

The estimated emission factors for iron foundry fugitive particulate sources are summarized in Table 2.7-1. Most of these emissions factors are based on "engineering judgment" (source's terminology) and very sparse test data. They should be considered of poor reliability. Emission factors were not included for coke handling and storage at iron foundries. These factors are discussed in Section 2.2.2-2. Factors are also not included for raw material handling, storage and transfer operations due to a lack of data. These sources are deemed to be insignificant as far as steel/iron scrap is concerned.

The emission factors for charging and tapping of the various furnace types, with the exception of electric induction furnaces, were derived by assuming a percentage of total furnace emissions. The emission factor for electric induction furnaces represents total furnace emissions including charging and tapping emissions. No test data were available; and, therefore, these factors are unconfirmed and have a very poor reliability rating.

The other emission factors are based upon very sparse test data and the source's engineering judgment. The reliability rating for these factors is also very poor.

TABLE 2.7-1. FUGITIVE DUST EMISSION FACTORS FOR IRON FOUNDRIES

	Source	Emission factor	Reliability Rating	Reference
1	Cupola furnace charging and tapping	0.1 to 2.0 lb/ton iron produced	E	1
2	Electric arc furnace charging and tapping	0.7 lb/ton iron charged[a] 1.4 lbs/ton iron charged[b]	E	19
3	Electric induction furnace melting, charging and tapping	1.5 lb/ton iron produced	E	1
4	Reverberatory furnace charging and tapping	0.1 lb/ton iron produced	E	3
5	Ductile iron inoculation	3.3 to 4.5 lb/ton iron produced	D	4,5
6	Pouring molten metal into molds	0.1 to 4.13 lb/ton iron produced	D	4,6
7	Casting shakeout	1.2 to 12.8 lb/ton iron produced	E	4,7
8	Cooling and cleaning castings	0.16 to 0.8 lb/ton castings produced	D	4,7
9	Finishing castings	0.01 lb/ton castings produced	E	7
10	Core and mold sand unloading and storage: mechanical handling pneumatic handling	 0.03 lb/ton sand unloaded[c] NA	E	20
11	Core sand and binder mixing	0.3 lb/ton sand mixed or 0.75 to 8.24 lb/ton iron produced	E E	2 4,7
12	Core making	0.35 lb/ton cores produced	E	2
13	Core baking	0.03 to 5.4 lb/ton cores baked	E	7,9,20
14	Mold sand preparation	1.3 lb/ton castings produced	E	4
15	Mold making	0.04 lb/ton castings produced	E	7

NA = Not available
[a]With no alloying in the ladle.
[b]With alloying in the ladle.
[c]Sand unloading emission factor is assumed to be equivalent to the taconite pellets unloading emission factor as presented in Section 2.1.3. Fugitive dust emissions from storage are estimated to be negligible since sand is normally stored indoors.

2.7.2 Particle Characterization[21]

The composition and particle size of dusts from various foundry operations will vary considerably. For example, dusts from a casting shakeout are mostly very fine carbonaceous material. On the other hand, dust from the grinding of castings contains coarse, freshly fractured particles, along with elemental iron, iron oxide and sand particles. Table 2.7-2 indicates the characteristics and sources of emissions in various foundry operations.

Much of the information available on particle characteristics is for the stack (non-fugitive) emissions from cupola and electric arc furnaces. However, since such information may be of value in approximating the particle characteristics of fugitive dust emission sources such as furnace charging, tapping and leaks, it is presented in this section.

The range of chemical composition of stack emission components in cupola dust has been reported in the literature as shown in Table 2.7-3. Table 2.7-3 indicates that oxides of iron and silicon and combustible materials form a high proportion of cupola dust.

Particle size distribution studies have been performed for stack emissions from cupola furnaces. The data reported in two major studies is shown in Tables 2.7-4 and 2.7-5. There is very little information in the literature on whether or not a relationship exists between particle size distribution and chemical composition of cupola emissions. One source conjectures that a high percentage of less than 5 micron particles is generally observed with substantial percentages of metallic oxides. On the other hand, a high percentage of greater than 4.4 micron particles corresponds to significant amounts of silicon oxides from foundry returns, dirty scrap and combustible materials.[27]

TABLE 2.7-2. PARTICULATE EMISSION CHARACTERISTICS FOR VARIOUS FOUNDRY OPERATIONS[22]

FOUNDRY OPERATION	TYPE	PARTICLE SIZE (μm)
Raw material storage and charge makeup:		
Store metal scrap, coke, limestone, dolomite, fluorspar, silica sand	Coke dust Limestone and sand dust	Fine to coarse 30 to 1,000
Centrifuge or heat metal borings and turnings to remove cutting oil	Oil vapors Smoke Unburned hydrocarbons	.03 to 1 .01 to .4
Weigh charge materials	Coke dust Limestone dust	Fine to coarse 30 to 1,000
Melting:		
Cupola furnace	Fly ash Coke breeze Smoke Metallic oxides Oil Vapors	8 to 20 Fine to coarse .01 to .4 Up to .7 .03 to 1
Electric arc melting	Smoke Metallic oxides Oil vapors	.01 to .4 Up to .7 .03 to 1
Induction furnace	Oil vapors	
Reverberatory (air) furnace	Smoke Oil vapors Metallic oxides Fly ash	.01 to .4 .03 to 1 Up to .7 8 to 20
Furnace charge preheating or drying	Smoke Oil vapors Metallic oxides Metallic oxides	.01 to .4 .03 to 1 75% - 5 to 60 (bottom fired) 0 to 20 (top fired)
Holding furnaces	Iron oxide Oil vapor	Fine to medium .03 to 1
Duplexing furnaces	Oil vapor Metallic oxides	.03 to 1 Up to .7
Inoculation	Metal oxides	Up to .7
Molding, pouring and shakeout:		
Molding	Sand Dust	Coarse

TABLE 2.7-2. CONTINUED

FOUNDRY OPERATION	TYPE	PARTICLE SIZE (μm)
Pouring:		
Gray and ductile iron Malleable	Core gases Facing fumes Metallic oxides Fluoride fumes Magnesium oxide fumes Synthetic binder smoke and fumes	 Fine to medium 0.1 to .4
Shakeout	Sand fines Smoke Dust	50% - 2 to 15 .01 to .4 50% - 2 to 15
Cleaning and finishing:		
Abrasive cleaning	Dust	50% - 2 to 15
Grinding	Metal dust Sand fines Abrasives Wheel bond material Vitrified resins	Above 7 Fine to medium 50% - 2 to 7 Fine 50% - 2 to 15
Annealing and heat treating	Oil vapors	.03 to 1
Sand conditioning:		
New sand storage Sand handling system Screening	Fines Fines Fines	50% - 2 to 15 50% - 2 to 15 50% - 2 to 15
Mixing	Fines Flour Bentonites Sea coal Cellulose	50% - 2 to 15 Fine to medium Fine to medium Fine to medium Fine to medium
Drying and reclamation	Dust Oil vapors	50% - 7 to 15 .03 to 1
Sand storage	Sand fines Flour Binders	Fine 50% - 7 to 15
Core making	Sand fines Dust	Fine to medium Fine to medium
Baking	Vapors Smoke	

TABLE 2.7-3. CHEMICAL COMPOSITION OF CUPOLA DUST[23]

Component	% by Weight	
	Mean Range	Scatter Values
SiO_2	20-40	10-45
CaO	3-6	2-18
Al_2O_3	2-4	0.5-25
MgO	1-3	0.5-5
FeO (Fe_2O_3, FE)	12-16	5-26
MnO	1-2	0.5-9
Ignition Loss (C,S,CO_2)	20-50	10-64

TABLE 2.7-4. PARTICLE SIZE DISTRIBUTION OF DUST EMISSIONS FROM BOTH COLD AND HOT BLAST CUPOLA FURNACE STACKS[24]

Particle Size (μm)	Cumulative Percent by Weight for Indicated Particle Diameter	
	Cold Blast	Hot Blast (acid)[a]
< 1000	90-100	95-100
< 500	80-90	90-100
< 200	60-80	65-95
< 100	40-65	40-80
< 50	20-50	30-60
< 20	10-30	20-40
< 10	5-25	15-35
< 5	2-20	10-30
< 2	up to 15	5-20

[a] Cupola supplied with a preheated air blast and where slag is formed due to acid constituents originating from the furnace lining.

TABLE 2.7-5. SIZE DISTRIBUTION FOR PARTICULATE EMISSIONS FROM EIGHTEEN CUPOLA FURNACE INSTALLATIONS[25]

Particle Size (μm)	Cumulative Percent by Weight for Indicated Particle Diameter
< 2	14
< 5	24
< 10	34
< 20	44
< 50	61
< 100	78
< 200	93

Chemical composition or particulate emissions from electric arc furnaces at three iron foundries has been reported in one literature source and is shown in Table 2.7-6. The main components in these emissions were iron oxide and silicon dioxide, while substantial amounts of oxides of manganese, aluminum and magnesium were found. The emissions consist almost entirely of the oxides of various metals charged, with lesser amounts of furnace refractories and fluxing materials which were used.[28]

TABLE 2.7-6. CHEMICAL ANALYSIS OF PARTICULATE EMISSIONS FROM AN ELECTRIC ARC FURNACE[26]

Constituent	Proportion of Total Particulate, Weight Percent		
	Foundry A	Foundry B	Foundry C
Iron oxide	75-85	75-85	75-85
Silicon dioxide	10	10	10
Magnesium oxide	2	0.8	1
Manganese oxide	2	2	2
Lead oxide	1	2	0.5
Alumina	0.5	1	0.5
Calcium oxide	0.3	0.2	0.8
Zinc oxide	0.2	2	0.3
Copper oxide	0.04	0.03	0.01
Lithium oxide	0.03	0.03	0.03
Tin oxide	0.03	0.3	0.02
Nickel oxide	0.02	0.03	0.01
Chromium oxide	0.02	0.07	0.01
Barium oxide	0.02	0.07	0.01

Particle size distributions of particulate emissions have also been determined for electric arc furnaces at three foundries. These distributions are shown in Table 2.7-7. It is reported that particulate emissions from electric arc furnace melting and refining are quite small in diameter. Table 2.7-7, which indicates that 80 percent of the emissions have a particle diameter smaller than 5 microns, confirms this conclusion. A second literature reference indicates that 90 to 95 percent of the fumes from electric arc furnaces are below 0.5 microns in size.[29] Another literature source reports that 75 percent of the particulates are less than 5 microns in diameter with a mass median diameter between 2.27 and 2.33 μm.[30]

TABLE 2.7-7. PARTICLE-SIZE DISTRIBUTION FOR PARTICULATE EMISSIONS FROM THREE ELECTRIC-ARC-FURNACE INSTALLATIONS[31]

Particle Size (μm)	Cumulative Percent by Weight for Indicated Particle Diameter		
	Foundry A	Foundry B	Foundry C
< 1	5	8	18
< 2	15	54	61
< 5	28	80	84
< 10	41	89	91
< 15	55	93	94
< 20	68	96	96
< 50	98	99	99

The chemical composition and particle size distributions of particulate emissions from both cupolas and electric arc furnaces are highly variable and are dependent on a number of factors. One literature source concludes that the type of cupola emissions are more affected by the quantity and quality of charge materials, and that the nature and cleanliness of the charged materials are the most important factors in determining the type of emission from electric arc furnaces.[32]

2.7.4 Control Methods

Raw material handling, storage and transfer operations as such are not addressed here but are discussed in Section 2.2 for coke and limestone. These operations for the iron and steel scrap are assumed to be low emission sources, and no control is recommended.

Reduction of emissions from melting operations is enhanced when clean scrap is used in the raw charge. Clean materials that are essentially devoid of dirt, oil or grease carry no extraneous burden into and through the furnace. Use of clean scrap, or the pre-cleaning of dirty scrap before use, are useful and appropriate measures worthy of consideration and adjunctive to and supportive of other control measures. However, it has been reported that the pre-cleaning of dirty scrap is not economically feasible.[33]

Charging and tapping emissions from the cupola may be controlled by hooding the charging and tapping areas and venting the system to fabric filters or scrubbers. Another system that may be used is building evacuation and venting to a fabric filter. Proper sizing of the primary control system to maintain continuous draft through the charging door will help alleviate fugitive emissions.[13] Cupolas with above or below charge takeoffs can maintain a strong in-draft through the charge door and eliminate the escape of fugitive emissions.

Typical control devices used for electric arc or electric induction furnaces include a localized, fixed capture hood and a fabric filter or wet scrubber. The design air volume required to ventilate an electric arc furnace with an integral hood is approximately 2,500 cfm per ton of charge.[7,34] This level of ventilation should provide effective capture of charging and tapping emissions.

Newer furnaces can utilize the above system, canopy hoods (roof mounted hoods) or direct shell evacuation.[30] The latter two control measures may not be feasible on older furnaces due to space and design constraints.

Generally, control measures for charging, melting and tapping emissions from reverberatory furnaces have not been required because of their relatively low emission rates.[35] However, collection of charging and tapping emissions, as well as furnace emissions (if no stack discharge) is technically feasible thru the use of localized hooding or building evacuation with exhaust to a fabric filter or electrostatic precipitator. Such control measures may have to be implemented especially for reverberatory furnaces that are or will be using pulverized coal.

Technically feasible methods for capturing fugitive dusts from all furnace operations include building evacuation or local exhaust systems. (See Figures 2.7-10 and 2.7-11 for examples.) Building evacuation to a collection device can control emissions from all sources in a foundry such as casting shakeout, cooling, cleaning and finishing. (One source reports that the use of building evacuation or general dilution ventilation systems without separate primary emission capture is unlikely to provide a sufficient degree of control for airborne contaminants in most foundries to meet OSHA's permissible exposure limits for such contaminants.[33]) On the other hand, local exhaust control systems generally serve specific sources. Because of the large exhaust volumes and attendant high operating and capital costs for total building evacuation systems, the local exhaust methods are usually favored.

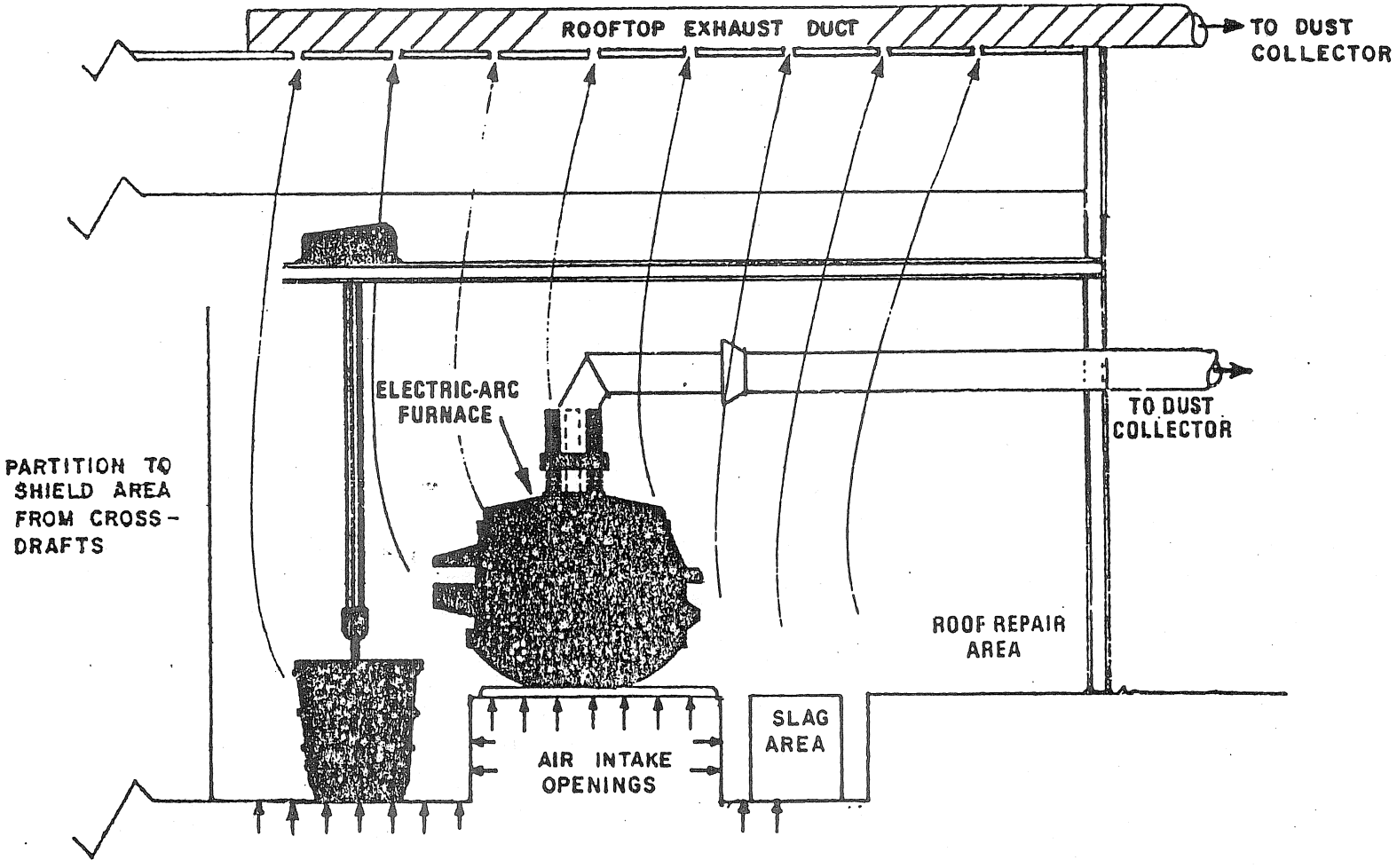

Figure 2.7-10. Building evacuation system.[36]

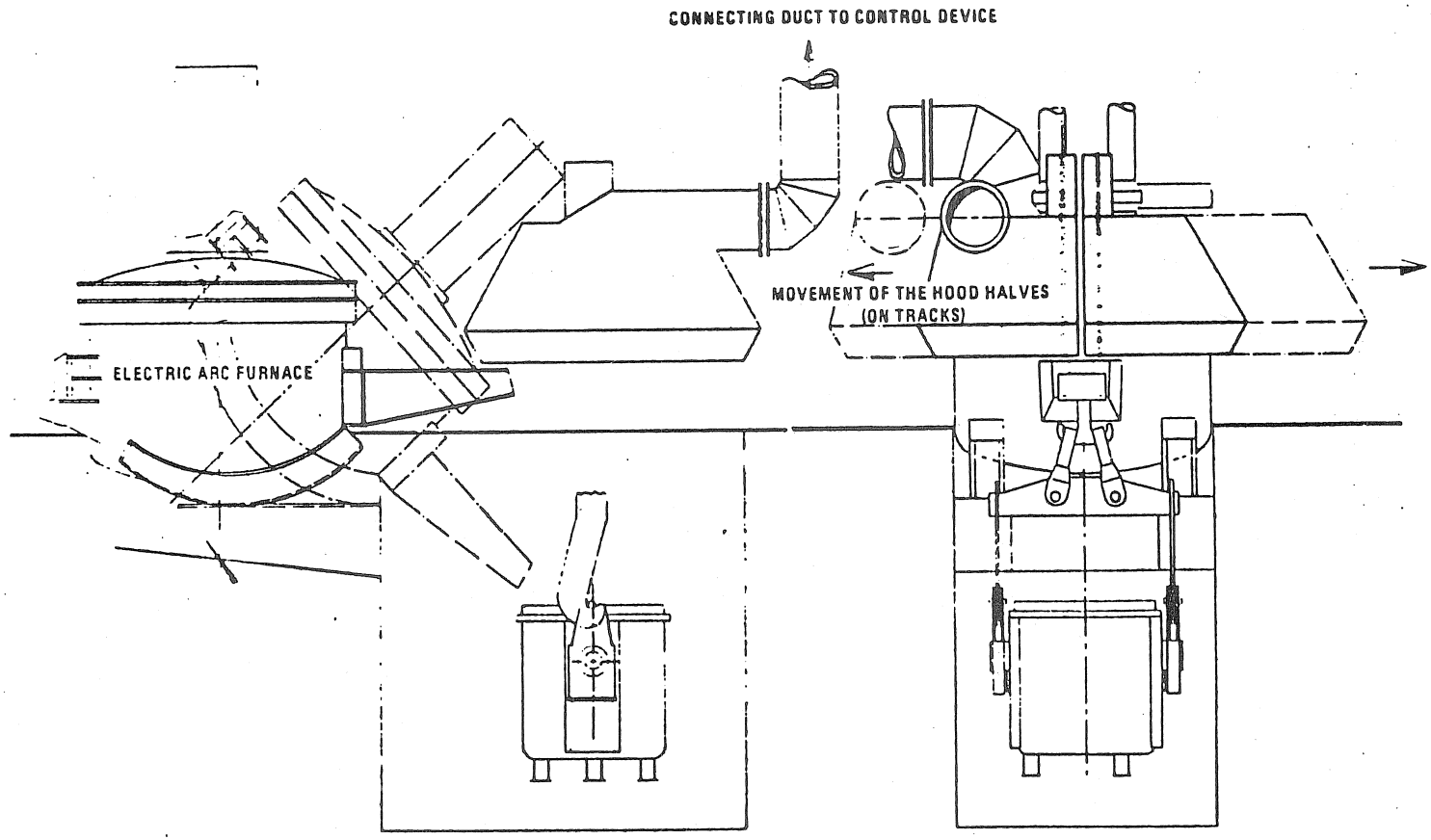

Figure 2.7-11. Mobile tapping hoods.[37]

In recent years, ductile iron inoculation stations have been equipped with collecting hoods or have been installed in enclosed rooms. The evolved gases are exhausted to a dust collection unit. Medium energy wet scrubbers and fabric filters have been used for dust collection.[38]

A side draft hood is often provided for the pouring area, and the mold cooling conveyor between the pouring and shakeout areas is often fully hooded with sheet metal. Also, the use of hooding as illustrated in Figure 2.7-12 is another successful system for capturing emissions from pouring and mold cooling. In this system, air is blown downward from the upper edge of the hood along with the pouring and mold cooling emissions. A variation of this system consists of utilizing an incoming draft from a floor grating rather than from the front edge of the hood. For smaller foundries, a movable pouring hood as shown in Figure 2.7-13 may be effective.[40] In practice, pouring and mold cooling emissions, especially for smaller production and jobbing foundries with non-fixed pouring and cooling locations, are usually exhausted directly to the atmosphere without control.[41] If control measures are deemed necessary, the hoods may be vented to wet scrubbers.

Fugitive dust emissions from the shakeout area are usually collected via a side or bottom draft hood or a partial enclosure. Duct systems from the shakeout usually lead to a single control device, frequently a wet scrubber or fabric filter. Figure 2.7-14 illustrates a shakeout with an enclosure vented to a wet scrubber.

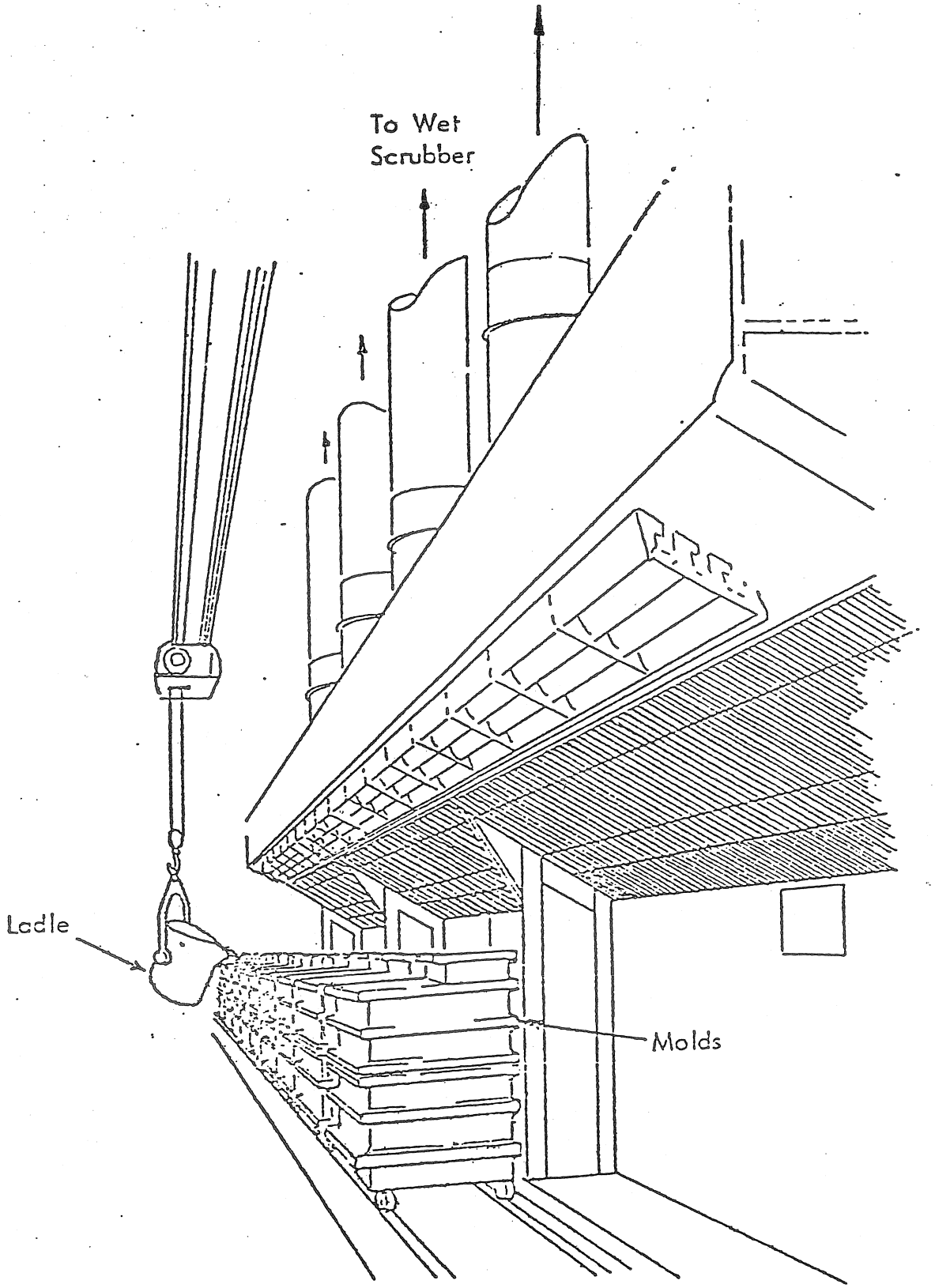

Figure 2.7-12. Hooded pouring station.[39]

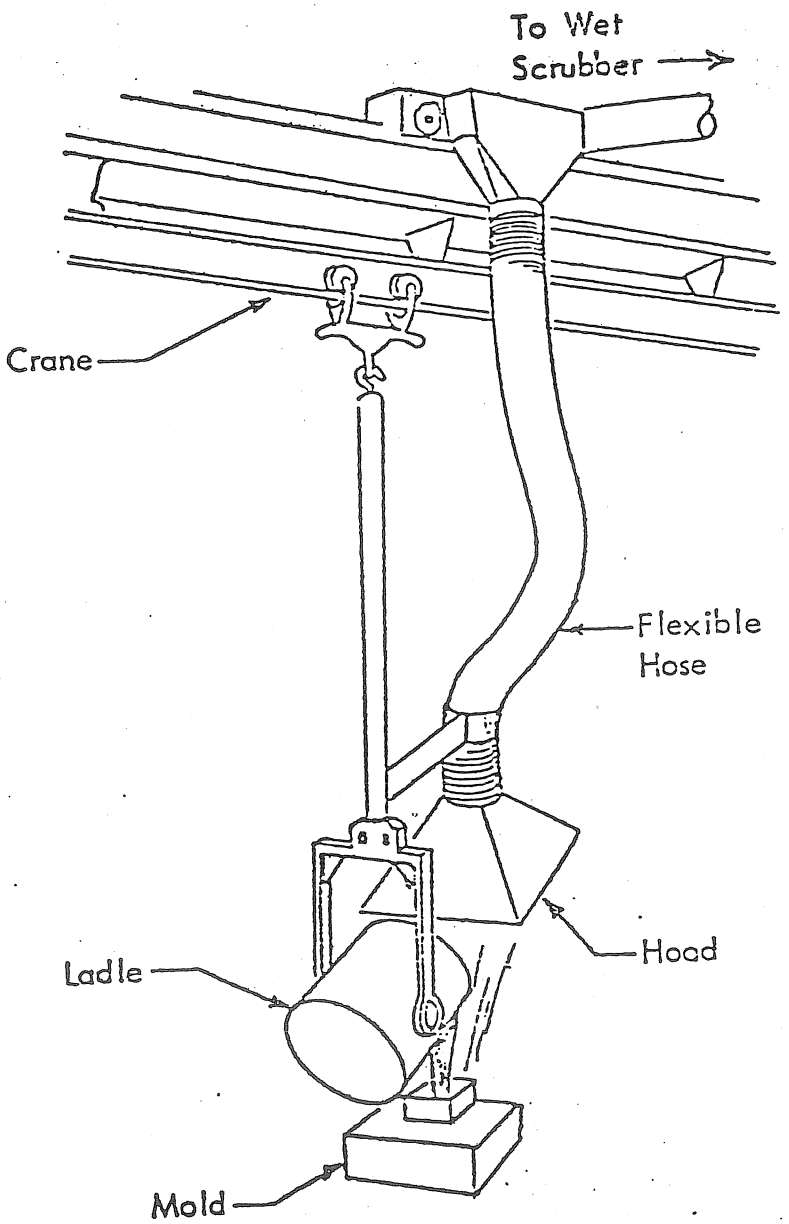

Figure 2.7-13. Movable pouring hood.[42]

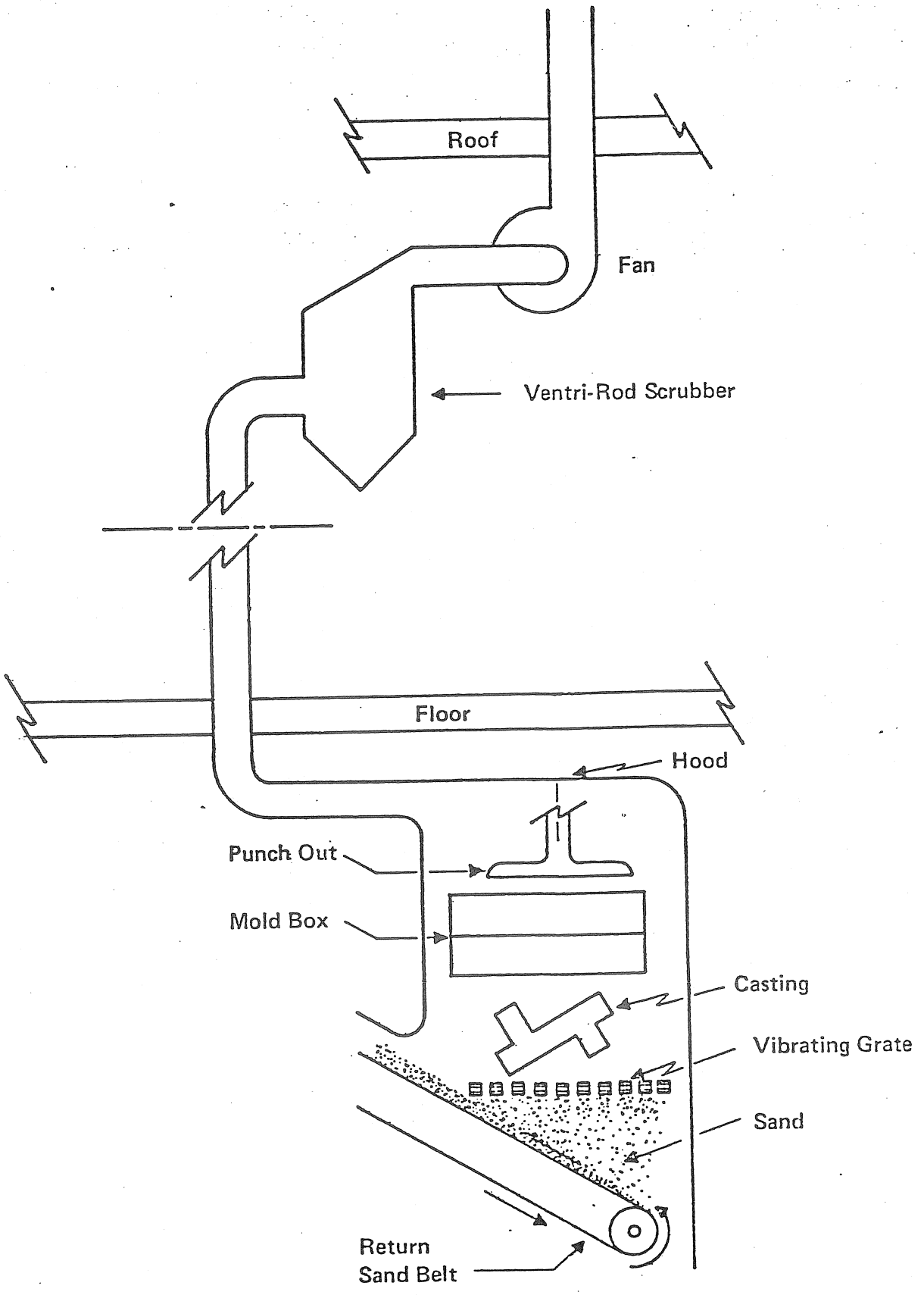

Figure 2.7-14. A casting shakeout control system.[43]

Particulate emissions from cleaning and finishing operations may be captured by local exhaust systems connected to either dry mechanical collectors (i.e., cyclones), fabric filters or wet collectors. Particulate emissions from abrasive shot blasting and tumble cleaners is commonly controlled by fabric filters or medium energy wet collectors. Dry mechanical collectors are also used at abrasive cleaning processes. Grinding operations are normally provided with local exhaust hoods connected to either high efficiency centrifugal collectors (multiple cyclones) or fabric filters.[44]

Coremaking effluents consist primarily of the gases emitted from the cold box, hot box, bake ovens and shell core machines and are usually exhausted to the atmosphere through a ventilation system or are passed through an odor scrubber before venting to the atmosphere.[44] Core ovens, when operated below 400°F and fired with natural gas, do not generally require air pollution control equipment and may be vented directly to the atmosphere. Emissions can be reduced by modifying the composition of the core binders and lowering the baking temperature.[45]

Medium energy wet collectors are best suited for moist sand preparation and handling. When dry sand conditions exist, fabric filters are occasionally used. Often some type of hood is used to capture emissions in sand conveyor systems especially at transfer points. As with many other processes, ductwork and exhaust fans are required in a complete collection system.[44] (Figure 2.7-15 illustrates the capture design on a typical sand-handling system.)

Table 2.7-8 summarizes the available control techniques, their effectiveness, estimated costs and RACM selections.